MONGTEC®
CNC職人のこだわり

Mongtec
Angle Head

mongtec | mongtec-tools.com | ai.mongtec-tools.com | info@mongtec.com

BT30Q16L

1. The shell is made of aviation aluminum, through aging treatment, precision machining, with high rigidity, high precision, long life and other characteristics. The minimum pass allowed Phi 100mm
2. The main drive shaft is made of special alloy material, processed by strict heat treatment process, and finally finely ground to achieve high transmission stability.
3. Gear wheel bearings are imported to ensure the transmission of high torque, low noise.
4. Input and output forms are diverse and flexible, not limited to BT or ER interface, can meet all kinds of precision machining equipment, can be used for milling,drilling, tapping, grinding and other processes of processing.

Shank with

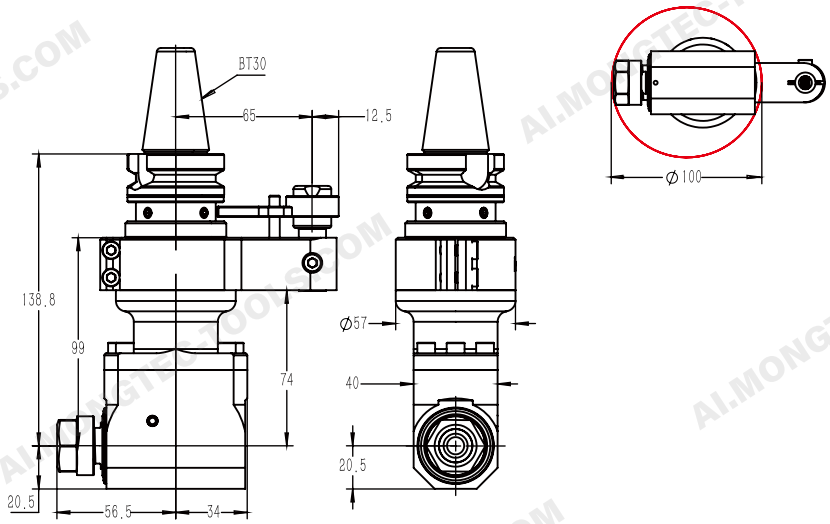

PARAMETERS

Model	BT30Q16L
Driving Shank	BT30
More Shank	Can Be Used
Max. RPM	8000 RPM
Output Rotation	CW–CW
Ratio of Transmission	1:1
Through the Diameter	D100
Chucking Range	D1–D10
Tapping	M4–M8
Torque	18Nm
WT	1.851 kg
Inventory	Stock
Custom	Customization

Specifications and dimensions are for reference only and subject to change without notice. Please confirm the latest specifications before ordering.

BT30QER11

1. The shell is made of aviation aluminum, through aging treatment, precision processing, with high rigidity, high precision, long life and other characteristics. The minimum pass allowed Phi 75mm
2. The main drive shaft is made of special alloy material, processed by precise heat treatment process, and finally finely ground and formed to achieve high transmission stability.
3. Gear wheel bearings are imported to ensure the transmission of high torque, lown oise.
4. Input and output forms are diverse and flexible, not limited to BT or ER interface,can meet all kinds of precision machining equipment, can be used for milling,drilling, tapping, grinding and other processes of processing.

Shank with

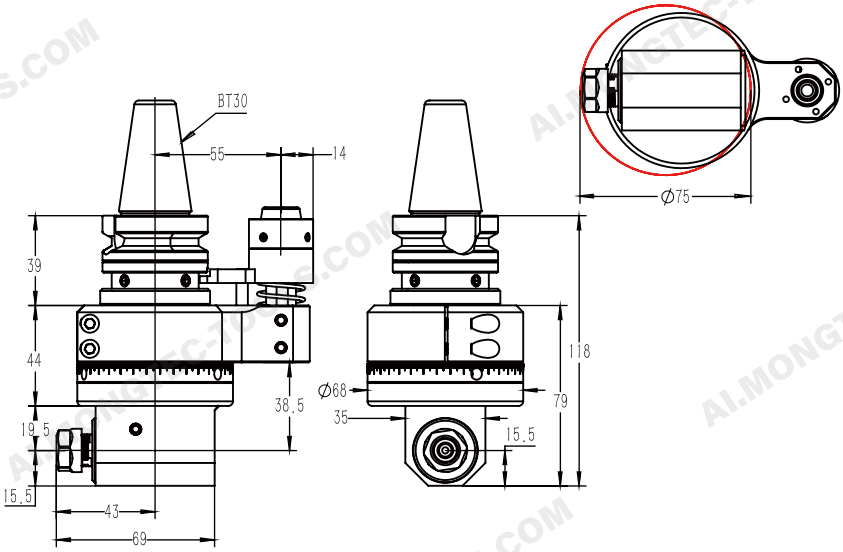

PARAMETERS

Model	BT30QER11
Driving Shank	BT30
More Shank	Can Be Used
Max. RPM	8000 RPM
Output Rotation	CW–CW
Ratio of Transmission	1:1
Through the Diameter	D75
Chucking Range	D1–D7
Tapping	M4–M6
Torque	10.8Nm
WT	1.661kg
Inventory	Stock
Custom	Customization

Specifications and dimensions are for reference only and subject to change without notice. Please confirm the latest specifications before ordering.

BT30QER16

1. The shell is made of QT500Q7, through aging treatment, precision machining, with high rigidity, high precision, long life and other characteristics. The minimum pass allowed Phi D100
2. The main drive shaft is made of special alloy material, processed by strict heat treatment process, and finally finely ground to achieve high transmission stability.
3. Gear wheel bearings are imported to ensure the transmission of high torque, low noise.
4. Input and output forms are diverse and flexible, not limited to BT or ER interface, can meet all kinds of precision machining equipment, can be used for milling,drilling, tapping, grinding and other processes of processing.

Shank with

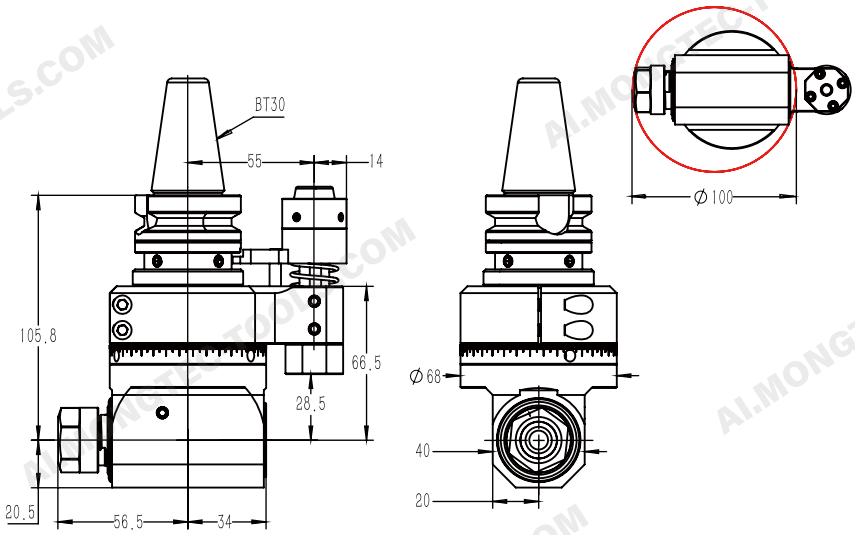

PARAMETERS

Model	BT30QER16
Driving Shank	BT30
More Shank	Can Be Used
Max. RPM	8000 RPM
Output Rotation	CW–CW
Ratio of Transmission	1:1
Through the Diameter	D100
Chucking Range	D1–D10
Tapping	M4–M8
Torque	18Nm
WT	1.504 kg
Inventory	Stock
Custom	Customization

Specifications and dimensions are for reference only and subject to change without notice. Please confirm the latest specifications before ordering.

BT30QER25

1. The shell is made of QT500Q7, through aging treatment, precision processing, with high rigidity, high precision, long life and other characteristics. The minimum pass allowed Phi D120
2. The main drive shaft is made of special alloy material, processed by precise heat treatment process, and finally finely ground and formed to achieve high transmission stability.
3. Gear wheel bearings are imported to ensure the transmission of high torque, low noise.
4. Input and output forms are diverse and flexible, not limited to BT or ER interface,can meet all kinds of precision machining equipment, can be used for milling,drilling, tapping, grinding and other processes of processing

Shank with

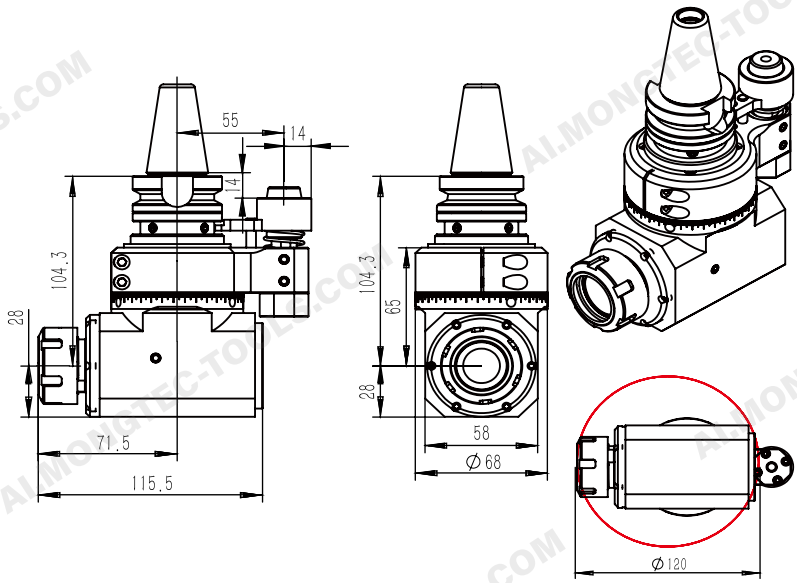

PARAMETERS

Model	BT30QER25
Driving Shank	BT30
More Shank	Can Be Used
Max. RPM	6800 RPM
Output Rotation	CW–CW
Ratio of Transmission	1:1
Through the Diameter	D120
Chucking Range	D1–D16
Tapping	M6–M14
Torque	46.Nm
WT	2.8 kg
Inventory	Stock
Custom	Customization

Specifications and dimensions are for reference only and subject to change without notice. Please confirm the latest specifications before ordering.

BT30QW10

1. The shell is made of aviation aluminum, through aging treatment, precision machining, with high rigidity, high precision, long life and other characteristics. The minimum pass allowed Phi D90
2. The main drive shaft is made of special alloy material, processed by strict heat treatment process, and finally finely ground to achieve high transmission stability.
3. Gear wheel bearings are imported to ensure the transmission of high torque, low noise.
4. Input and output forms are diverse and flexible, not limited to BT or ER interface,can meet all kinds of precision machining equipment, can be used for milling,drilling, tapping, grinding and other processes of processing.

Shank with

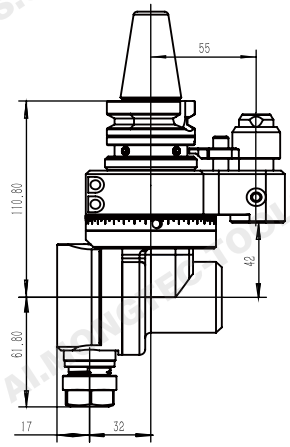

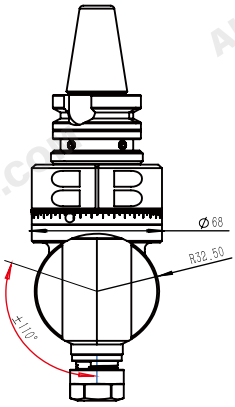

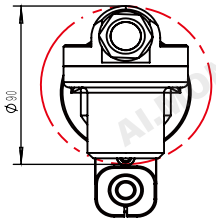

PARAMETERS

Model	BT30QW10
Driving Shank	BT30
More Shank	Can Be Used
Max. RPM	10000 RPM
Output Rotation	CW–CW
Ratio of Transmission	1:1
Through the Diameter	D90
Chucking Range	D3-D10
Tapping	M5-M10
Torque	23. Nm
WT	2.1 kg
Inventory	Stock
Custom	Customization

Specifications and dimensions are for reference only and subject to change without notice. Please confirm the latest specifications before ordering.

BT30Q3M

1. The shell is made of aviation aluminum, through aging treatment, precision processing, with high rigidity, high precision, long life and other characteristics.The minimum pass allowed Phi D25
2. The main drive shaft is made of special alloy material, processed by precise heat treatment process, and finally finely ground and formed to achieve high transmission stability.
3. Gear wheel bearings are imported to ensure the transmission of high torque, low noise.
4. Input and output forms are diverse and flexible, not limited to BT or ER interface,can meet all kinds of precision machining equipment, can be used for milling,drilling, tapping, grinding and other processes of processing.

Shank with

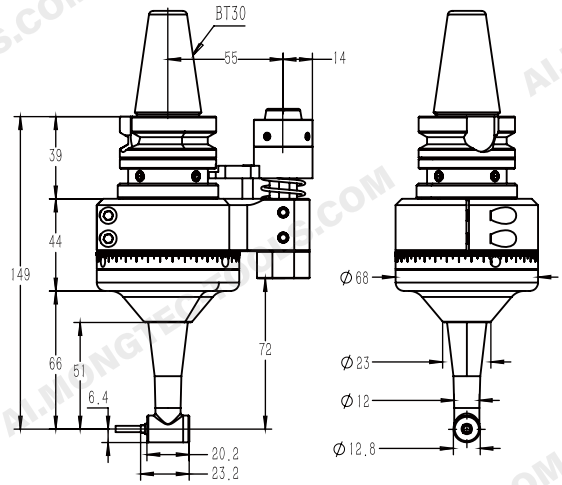

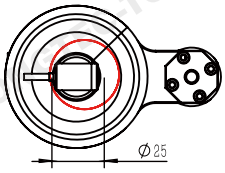

PARAMETERS

Model	BT30Q3M
Driving Shank	BT30
More Shank	Can Be Used
Max. RPM	10000 RPM
Output Rotation	CW–CW
Ratio of Transmission	1:0.75
Through the Diameter	D25
Chucking Range	D3
Tapping	M3
Torque	4.3 Nm
WT	1.493 kg
Inventory	Stock
Custom	Customization

Specifications and dimensions are for reference only and subject to change without notice. Please confirm the latest specifications before ordering.

BT30Q3RA

1. The shell is made of aviation aluminum, through aging treatment, precision machining, with high rigidity, high precision, long life and other characteristics. The minimum pass allowed Phi D37
2. The main drive shaft is made of special alloy material, processed by strict heat treatment process, and finally finely ground to achieve high transmission stability.
3. Gear wheel bearings are imported to ensure the transmission of high torque, low noise.
4. Input and output forms are diverse and flexible, not limited to BT or ER interface,can meet all kinds of precision machining equipment, can be used for milling,drilling, tapping, grinding and other processes of processing.

Shank with

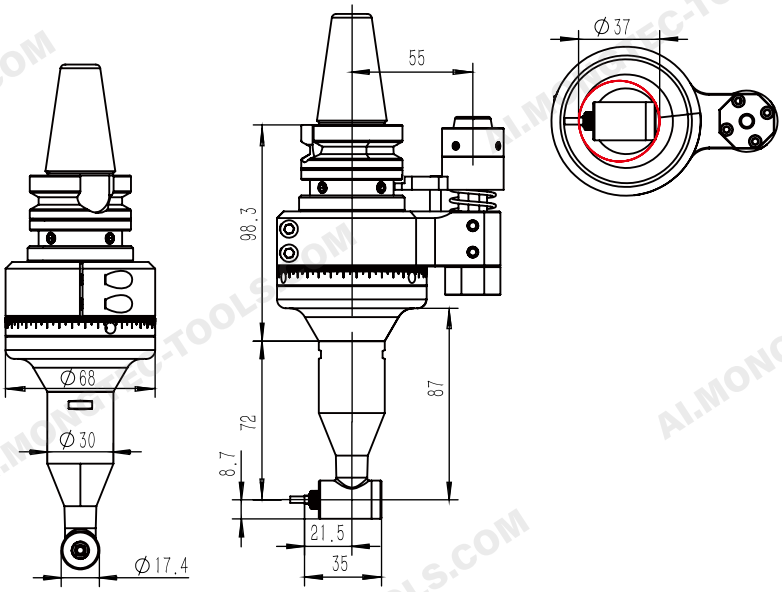

PARAMETERS

Model	BT30Q3RA
Driving Shank	BT30
More Shank	Can Be Used
Max. RPM	10000 RPM
Output Rotation	CW–CW
Ratio of Transmission	1.5 : 1
Through the Diameter	D37
Chucking Range	D3
Tapping	M3
Torque	4.3 Nm
WT	1.8 kg
Inventory	Stock
Custom	Customization

Specifications and dimensions are for reference only and subject to change without notice. Please confirm the latest specifications before ordering.

BT30QC1.6M

1. The shell is made of aviation aluminum, through aging treatment, precision processing, with high rigidity, high precision, long life and other characteristics.The minimum pass allowed Phi 11.5mm
2. The main drive shaft is made of special alloy material, processed by precise heat treatment process, and finally finely ground and formed to achieve high transmission stability.
3. Gear wheel bearings are imported to ensure the transmission of high torque, low noise.
4. Input and output forms are diverse and flexible, not limited to BT or ER interface,can meet all kinds of precision machining equipment, can be used for milling,drilling, tapping, grinding and other processes of processing.

Shank with

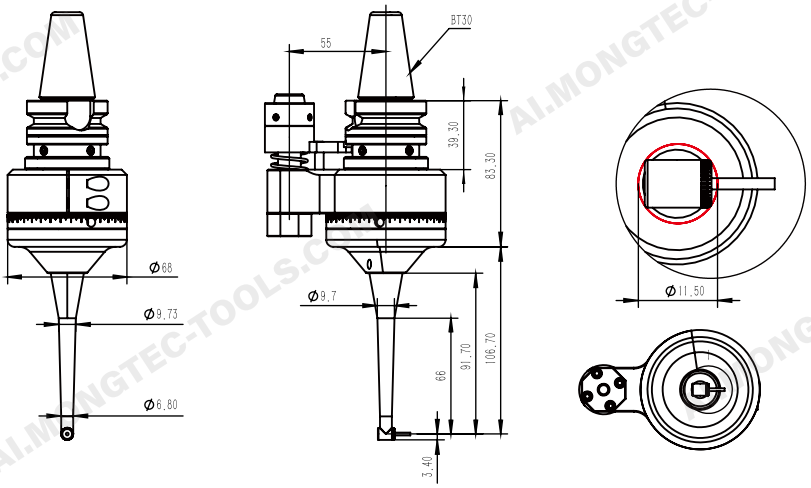

PARAMETERS

Model	BT30QC1.6M
Driving Shank	BT30
More Shank	Can Be Used
Max. RPM	12000 RPM
Output Rotation	CW–CW
Ratio of Transmission	1:1.1
Through the Diameter	11.5MM
Chucking Range	D1.6
Tapping	M1.5
Torque	0.85 Nm
WT	1.48 kg
Inventory	Stock
Custom	Customization

Specifications and dimensions are for reference only and subject to change without notice. Please confirm the latest specifications before ordering.

BT40QDC5MQ50

1. The shell is made of 40Cr, through aging treatment, precision machining, with high rigidity, high precision, long life and other characteristics. The minimum pass allowed Phi D40
2. The main drive shaft is made of special alloy material, processed by strict heat treatment process, and finally finely ground to achieve high transmission stability.
3. Gear wheel bearings are imported to ensure the transmission of high torque, low noise.
4. Input and output forms are diverse and flexible, not limited to BT or ER interface,can meet all kinds of precision machining equipment, can be used for milling,drilling, tapping, grinding and other processes of processing.

Shank with

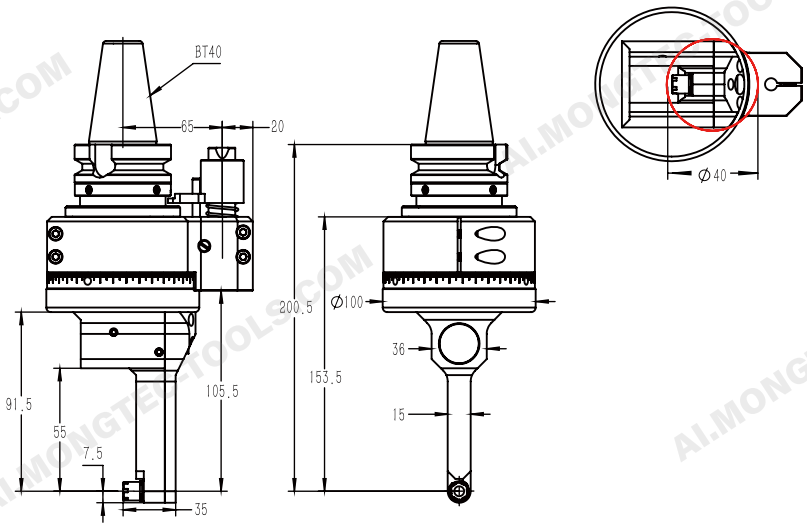

PARAMETERS

Model	BT40QDC5MQ50
Driving Shank	BT40
More Shank	Can Be Used
Max. RPM	6000 RPM
Output Rotation	CW–CW
Ratio of Transmission	1:1
Through the Diameter	D40
Chucking Range	D1-D5
Tapping	M3-M4
Torque	5.6Nm
WT	5.000 kg
Inventory	Stock
Custom	Customization

Specifications and dimensions are for reference only and subject to change without notice. Please confirm the latest specifications before ordering.

BT40QDC6

1. The shell is made of 40Cr, through aging treatment, precision processing, with high rigidity, high precision, long life and other characteristics. The minimum pass allowed Phi D35
2. The main drive shaft is made of special alloy material, processed by precise heat treatment process, and finally finely ground and formed to achieve high transmission stability.
3. Gear wheel bearings are imported to ensure the transmission of high torque, low noise.
4. Input and output forms are diverse and flexible, not limited to BT or ER interface,can meet all kinds of precision machining equipment, can be used for milling,rilling, tapping, grinding and other processes of processing.

Shank with

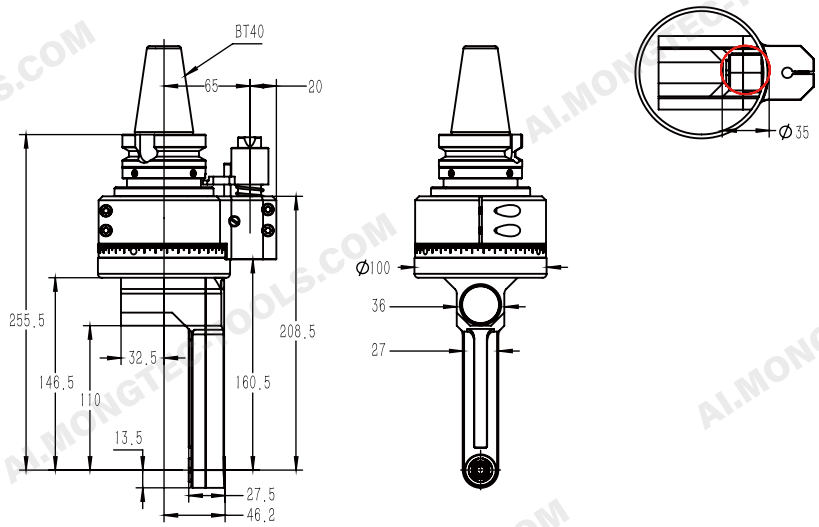

PARAMETERS

Model	BT40QDC6/Square
Driving Shank	BT40
More Shank	Can Be Used
Max. RPM	6000 RPM
Output Rotation	CW–CW
Ratio of Transmission	1:1
Through the Diameter	D35
Chucking Range	D1-D6
Tapping	M3-M6
Torque	10.8 Nm
WT	5.276 kg
Inventory	Stock
Custom	Customization

Specifications and dimensions are for reference only and subject to change without notice. Please confirm the latest specifications before ordering.

BT40QDC6Q66

1. The shell is made of 40Cr, through aging treatment, precision machining, with high rigidity, high precision, long life and other characteristics. The minimum pass allowed Phi D35
2. The main drive shaft is made of special alloy material, processed by strict heat treatment process, and finally finely ground to achieve high transmission stability.
3. Gear wheel bearings are imported to ensure the transmission of high torque, low noise.
4. Input and output forms are diverse and flexible, not limited to BT or ER interface,can meet all kinds of precision machining equipment, can be used for milling,drilling, tapping, grinding and other processes of processing.

Shank with

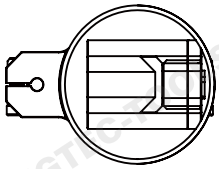

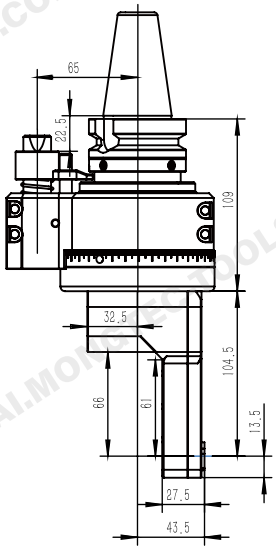

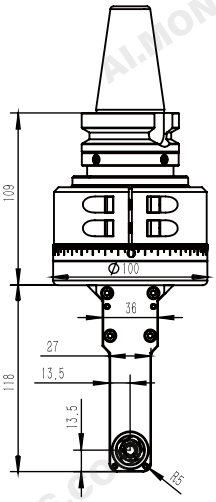

PARAMETERS

Model	BT40QDC6Q66
Driving Shank	BT40
More Shank	Can Be Used
Max. RPM	6000 RPM
Output Rotation	CW–CW
Ratio of Transmission	1:1
Through the Diameter	D35
Chucking Range	D1-D6
Tapping	Milling
Torque	10.8 Nm
WT	4.891 kg
Inventory	Stock
Custom	Customization

Specifications and dimensions are for reference only and subject to change without notice. Please confirm the latest specifications before ordering.

BT40QDC7Q18.5

1. The shell is made of 40Cr, through aging treatment, precision processing, with high rigidity, high precision, long life and other characteristics. The minimum pass allowed Phi D50
2. The main drive shaft is made of special alloy material, processed by precise heat treatment process, and finally finely ground and formed to achieve high transmission stability.
3. Gear wheel bearings are imported to ensure the transmission of high torque, low noise.
4. Input and output forms are diverse and flexible, not limited to BT or ER interface,can meet all kinds of precision machining equipment, can be used for milling,drilling, tapping, grinding and other processes of processing.

Shank with

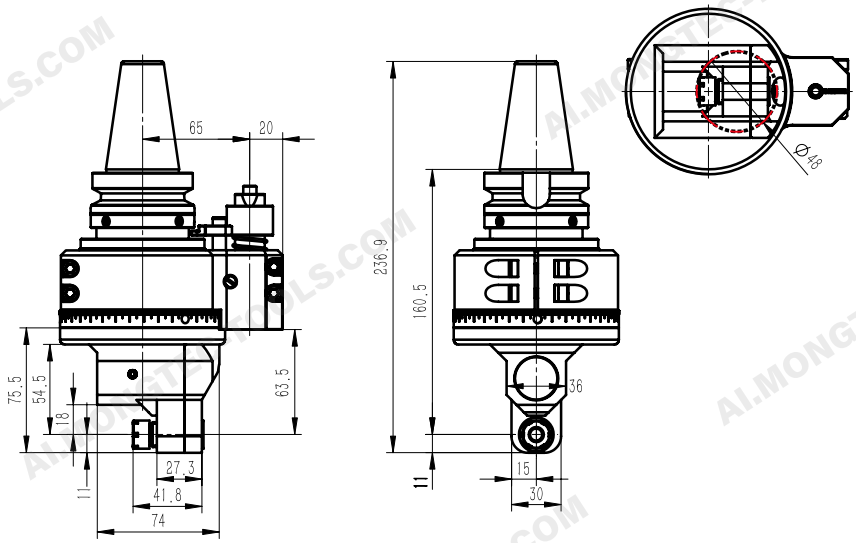

PARAMETERS

Model	BT40QDC7Q18
Driving Shank	BT40
More Shank	Can Be Used
Max. RPM	6000 RPM
Output Rotation	CW–CW
Ratio of Transmission	1:1
Through the Diameter	D50
Chucking Range	D1-D7
Tapping	Milling
Torque	10.8 Nm
WT	4.556 kg
Inventory	Stock
Custom	Customization

Specifications and dimensions are for reference only and subject to change without notice. Please confirm the latest specifications before ordering.

BT40QDC7Q35

1. The shell is made of 40Cr, through aging treatment, precision machining, with high rigidity, high precision, long life and other characteristics. The minimum pass allowed Phi D50
2. The main drive shaft is made of special alloy material, processed by strict heat treatment process, and finally finely ground to achieve high transmission stability.
3. Gear wheel bearings are imported to ensure the transmission of high torque, low noise.
4. Input and output forms are diverse and flexible, not limited to BT or ER interface,can meet all kinds of precision machining equipment, can be used for milling,drilling, tapping, grinding and other processes of processing.

Shank with

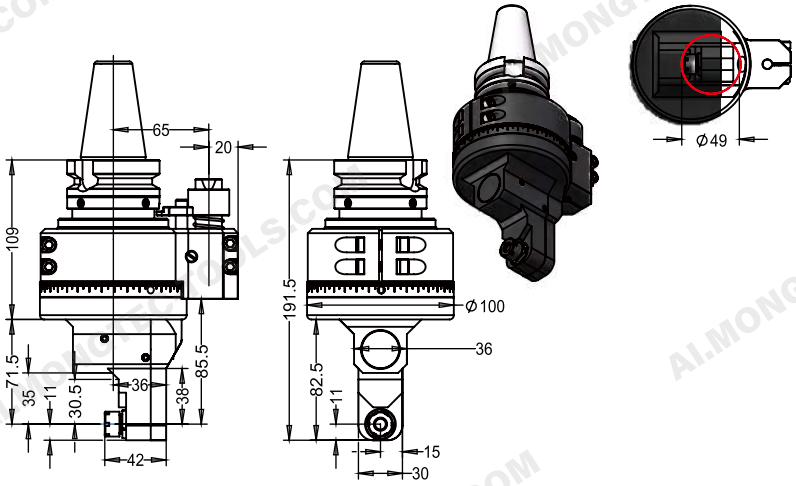

PARAMETERS

Model	BT40QDC7Q35
Driving Shank	BT40
More Shank	Can Be Used
Max. RPM	6000 RPM
Output Rotation	CW–CW
Ratio of Transmission	1:1
Through the Diameter	D50
Chucking Range	D1-D7
Tapping	Milling
Torque	10.8 Nm
WT	5.196 kg
Inventory	Stock
Custom	Customization

Specifications and dimensions are for reference only and subject to change without notice. Please confirm the latest specifications before ordering.

BT40QDC7Q52

1. The shell is made of 40Cr, through aging treatment, precision processing, with high rigidity, high precision, long life and other characteristics. The minimum pass allowed Phi D50
2. The main drive shaft is made of special alloy material, processed by precise heat treatment process, and finally finely ground and formed to achieve high transmission stability.
3. Gear wheel bearings are imported to ensure the transmission of high torque, low noise.
4. Input and output forms are diverse and flexible, not limited to BT or ER interface,can meet all kinds of precision machining equipment, can be used for milling,drilling, tapping, grinding and other processes of processing.

Shank with

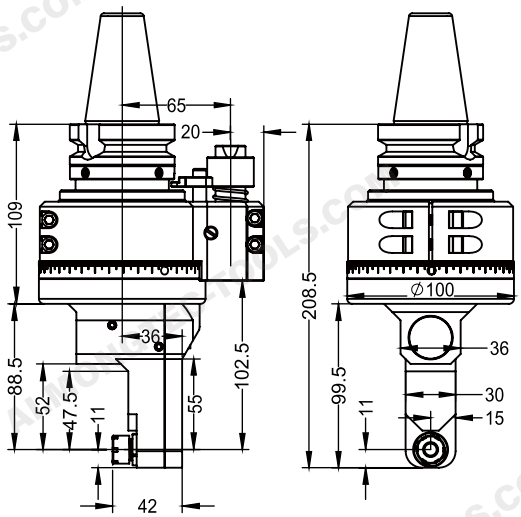

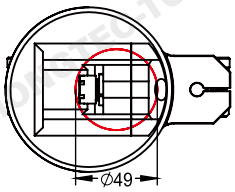

PARAMETERS

Model	BT40QDC7Q52
Driving Shank	BT40
More Shank	Can Be Used
Max. RPM	6000 RPM
Output Rotation	CW–CW
Ratio of Transmission	1:1
Through the Diameter	D50
Chucking Range	D1-D7
Tapping	Milling
Torque	10.8 Nm
WT	5.310 kg
Inventory	Stock
Custom	Customization

Specifications and dimensions are for reference only and subject to change without notice. Please confirm the latest specifications before ordering.

BT40QDC8Q45

1. The shell is made of 40Cr, through aging treatment, precision machining, with high rigidity, high precision, long life and other characteristics. The minimum pass allowed Phi D45
2. The main drive shaft is made of special alloy material, processed by strict heat treatment process, and finally finely ground to achieve high transmission stability.
3. Gear wheel bearings are imported to ensure the transmission of high torque, low noise.
4. Input and output forms are diverse and flexible, not limited to BT or ER interface,can meet all kinds of precision machining equipment, can be used for milling,drilling, tapping, grinding and other processes of processing.

Shank with

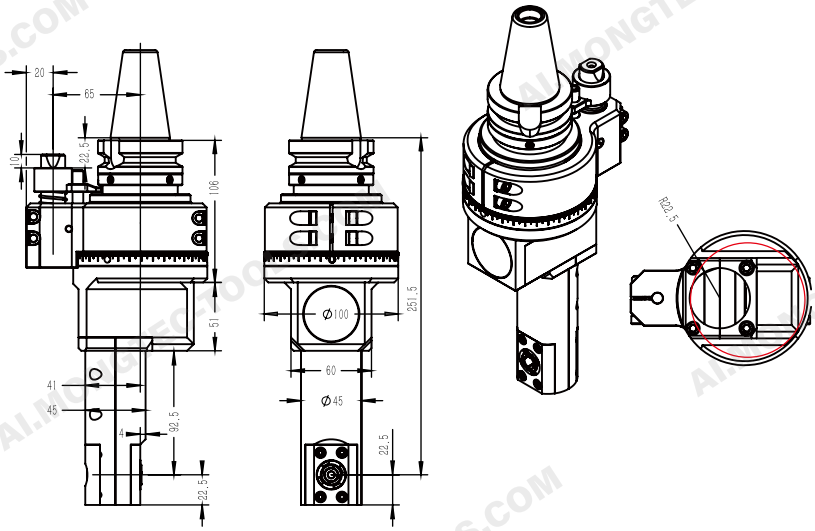

PARAMETERS

Model	BT40QDC8QD45
Driving Shank	BT40
More Shank	Can Be Used
Max. RPM	6000 RPM
Output Rotation	CW–CW
Ratio of Transmission	1:1
Through the Diameter	D45
Chucking Range	D4-D10
Tapping	M5-M10
Torque	23. Nm
WT	6.5 kg
Inventory	Stock
Custom	Customization

Specifications and dimensions are for reference only and subject to change without notice. Please confirm the latest specifications before ordering.

BT40QDC10

1. The shell is made of aviation aluminum, through aging treatment, precision machining, with high rigidity, high precision, long life and other characteristics. The minimum pass allowed Phi 100mm
2. The main drive shaft is made of special alloy material, processed by strict heat treatment process, and finally finely ground to achieve high transmission stability.
3. Gear wheel bearings are imported to ensure the transmission of high torque, low noise.
4. Input and output forms are diverse and flexible, not limited to BT or ER interface, can meet all kinds of precision machining equipment, can be used for milling,drilling, tapping, grinding and other processes of processing.

Shank with

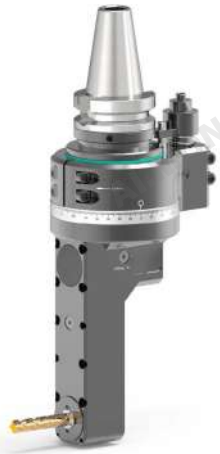

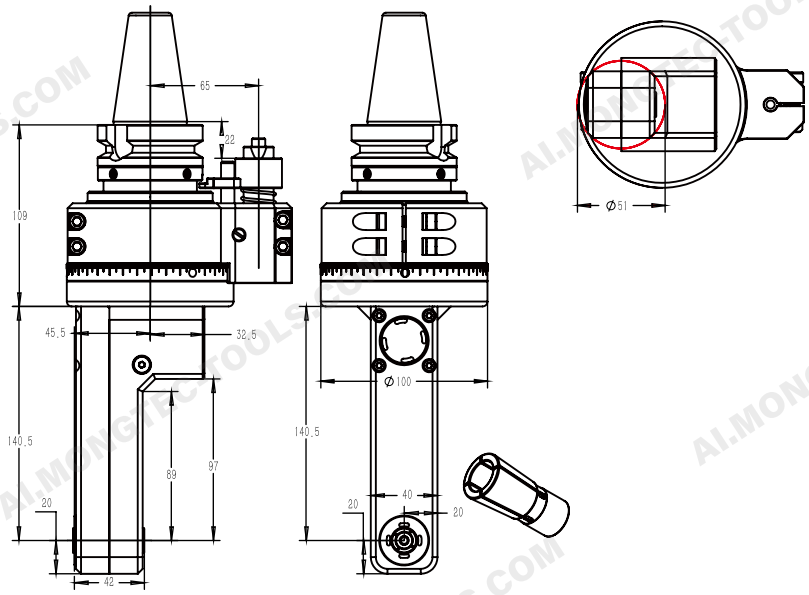

PARAMETERS

Model	BT40QDC10
Driving Shank	BT40
More Shank	Can Be Used
Max. RPM	6000 RPM
Output Rotation	CW–CW
Ratio of Transmission	1:1
Through the Diameter	D51
Chucking Range	D4-D10
Tapping	M5-M10
Torque	23. Nm
WT	6.5 kg
Inventory	Stock
Custom	Customization

Specifications and dimensions are for reference only and subject to change without notice. Please confirm the latest specifications before ordering.

BT40QER11Q90

1. The shell is made of QT500Q7, through aging treatment, precision machining, with high rigidity, high precision, long life and other characteristics. The minimum pass allowed Phi D75
2. The main drive shaft is made of special alloy material, processed by strict heat treatment process, and finally finely ground to achieve high transmission stability.
3. Gear wheel bearings are imported to ensure the transmission of high torque, low noise.
4. Input and output forms are diverse and flexible, not limited to BT or ER interface,can meet all kinds of precision machining equipment, can be used for milling,drilling, tapping, grinding and other processes of processing.

Shank with

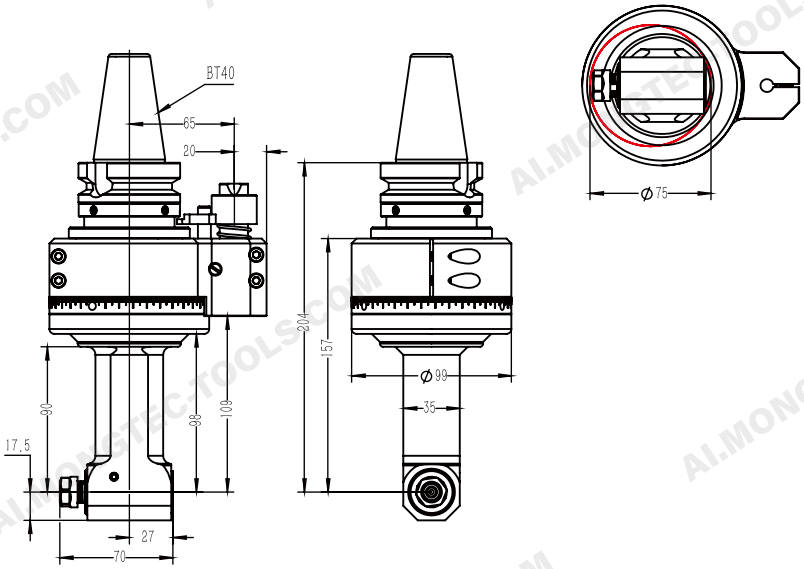

PARAMETERS

Model	BT40QER11Q90
Driving Shank	BT40
More Shank	Can Be Used
Max. RPM	8000 RPM
Output Rotation	CW–CW
Ratio of Transmission	1:1
Through the Diameter	D75
Chucking Range	D1-D7
Tapping	M5-M6
Torque	10.8Nm
WT	5.043 kg
Inventory	Stock
Custom	Customization

Specifications and dimensions are for reference only and subject to change without notice. Please confirm the latest specifications before ordering.

BT40QER11Q140

1. The shell is made of QT500Q7, through aging treatment, precision processing, with high rigidity, high precision, long life and other characteristics. The minimum pass allowed Phi D75
2. The main drive shaft is made of special alloy material, processed by precise heat treatment process, and finally finely ground and formed to achieve high transmission stability.
3. Gear wheel bearings are imported to ensure the transmission of high torque, low noise.
4. Input and output forms are diverse and flexible, not limited to BT or ER interface, can meet all kinds of precision machining equipment, can be used for milling,drilling, tapping, grinding and other processes of processing.

Shank with

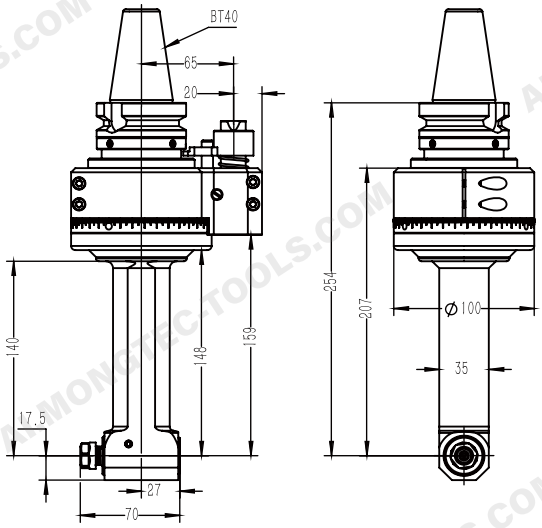

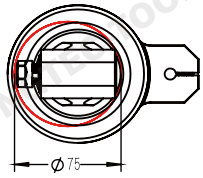

PARAMETERS

Model	BT40QER11Q140
Driving Shank	BT40
More Shank	Can Be Used
Max. RPM	8000 RPM
Output Rotation	CW–CW
Ratio of Transmission	1:1
Through the Diameter	D75
Chucking Range	D1-D7
Tapping	M5-M6
Torque	10.8Nm
WT	5.312 kg
Inventory	Stock
Custom	Customization

Specifications and dimensions are for reference only and subject to change without notice. Please confirm the latest specifications before ordering.

BT40QER11Q190

1. The shell is made of QT500Q7, through aging treatment, precision machining, with high rigidity, high precision, long life and other characteristics. The minimum pass allowed Phi D75
2. The main drive shaft is made of special alloy material, processed by strict heat treatment process, and finally finely ground to achieve high transmission stability.
3. Gear wheel bearings are imported to ensure the transmission of high torque, low noise.
4. Input and output forms are diverse and flexible, not limited to BT or ER interface, can meet all kinds of precision machining equipment, can be used for milling,drilling, tapping, grinding and other processes of processing.

Shank with

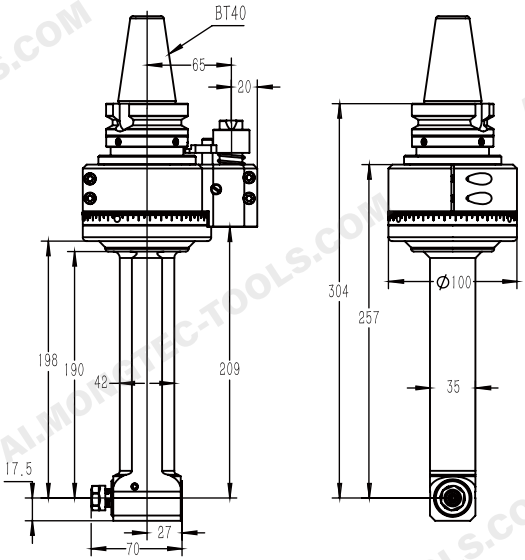

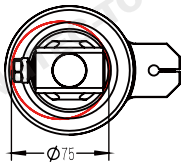

PARAMETERS

Model	BT40QER11Q190
Driving Shank	BT40
More Shank	Can Be Used
Max. RPM	8000 RPM
Output Rotation	CW–CW
Ratio of Transmission	1:1
Through the Diameter	D75
Chucking Range	D1-D7
Tapping	M5-M6
Torque	10.8Nm
WT	5.787 kg
Inventory	Stock
Custom	Customization

Specifications and dimensions are for reference only and subject to change without notice. Please confirm the latest specifications before ordering.

BT40QER16Q66

1. The shell is made of QT500Q7, through aging treatment, precision processing, with high rigidity, high precision, long life and other characteristics. The minimum pass allowed Phi D100
2. The main drive shaft is made of special alloy material, processed by precise heat treatment process, and finally finely ground and formed to achieve high transmission stability.
3. Gear wheel bearings are imported to ensure the transmission of high torque, low noise.
4. Input and output forms are diverse and flexible, not limited to BT or ER interface,can meet all kinds of precision machining equipment, can be used for milling,drilling, tapping, grinding and other processes of processing.

Shank with

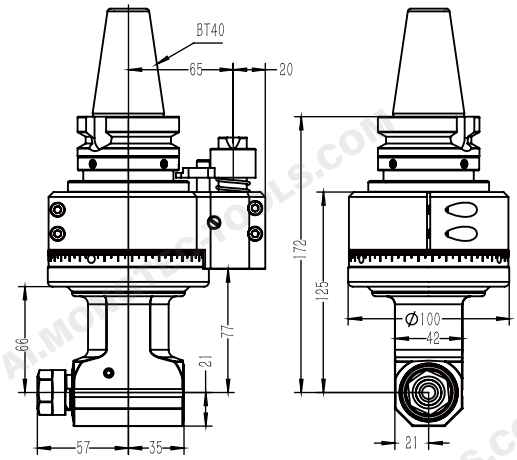

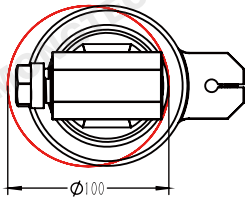

PARAMETERS

Model	BT40QER16Q66
Driving Shank	BT40
More Shank	Can Be Used
Max. RPM	8000 RPM
Output Rotation	CW–CW
Ratio of Transmission	1:1
Through the Diameter	D100
Chucking Range	D1–D10
Tapping	M5-M8
Torque	18.Nm
WT	5.043 kg
Inventory	Stock
Custom	Customization

Specifications and dimensions are for reference only and subject to change without notice. Please confirm the latest specifications before ordering.

BT40QER16Q110

1. The shell is made of QT500Q7, through aging treatment, precision machining, with high rigidity, high precision, long life and other characteristics. The minimum pass allowed Phi D100
2. The main drive shaft is made of special alloy material, processed by strict heat treatment process, and finally finely ground to achieve high transmission stability.
3. Gear wheel bearings are imported to ensure the transmission of high torque, low noise.
4. Input and output forms are diverse and flexible, not limited to BT or ER interface,can meet all kinds of precision machining equipment, can be used for milling,drilling, tapping, grinding and other processes of processing.

Shank with

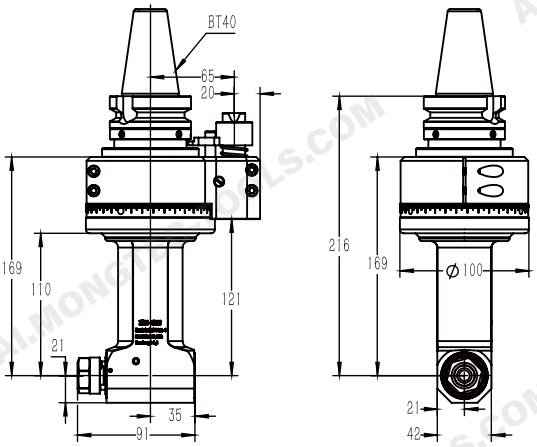

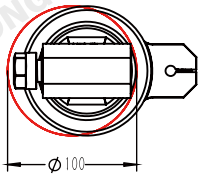

PARAMETERS

Model	BT40QER16Q110
Driving Shank	BT40
More Shank	Can Be Used
Max. RPM	8000 RPM
Output Rotation	CW–CW
Ratio of Transmission	1:1
Through the Diameter	D100
Chucking Range	D1–D10
Tapping	M5-M8
Torque	18.Nm
WT	5.391 kg
Inventory	Stock
Custom	Customization

Specifications and dimensions are for reference only and subject to change without notice. Please confirm the latest specifications before ordering.

BT40QER16Q160

1. The shell is made of QT500Q7, through aging treatment, precision processing, with high rigidity, high precision, long life and other characteristics. The minimum pass allowed Phi D100
2. The main drive shaft is made of special alloy material, processed by precise heat treatment process, and finally finely ground and formed to achieve high transmission stability.
3. Gear wheel bearings are imported to ensure the transmission of high torque, low noise.
4. Input and output forms are diverse and flexible, not limited to BT or ER interface,can meet all kinds of precision machining equipment, can be used for milling,drilling, tapping, grinding and other processes of processing.

Shank with

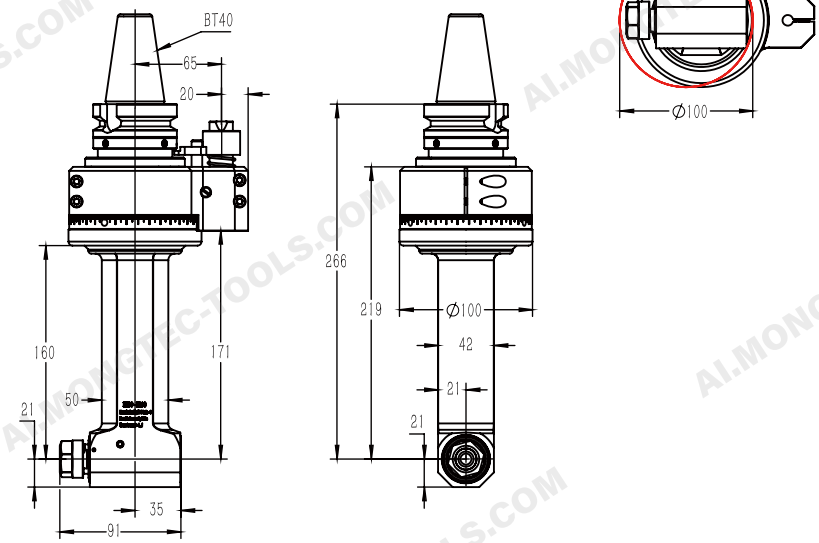

PARAMETERS

Model	BT40QER16Q160
Driving Shank	BT40
More Shank	Can Be Used
Max. RPM	8000 RPM
Output Rotation	CW–CW
Ratio of Transmission	1:1
Through the Diameter	D100
Chucking Range	D1–D10
Tapping	M5-M8
Torque	18.Nm
WT	5.823 kg
Inventory	Stock
Custom	Customization

Specifications and dimensions are for reference only and subject to change without notice. Please confirm the latest specifications before ordering.

BT40QER16Q210

1. The shell is made of QT500Q7, through aging treatment, precision machining, with high rigidity, high precision, long life and other characteristics. The minimum pass allowed Phi D100
2. The main drive shaft is made of special alloy material, processed by strict heat treatment process, and finally finely ground to achieve high transmission stability.
3. Gear wheel bearings are imported to ensure the transmission of high torque, low noise.
4. Input and output forms are diverse and flexible, not limited to BT or ER interface,can meet all kinds of precision machining equipment, can be used for milling,drilling, tapping, grinding and other processes of processing.

Shank with

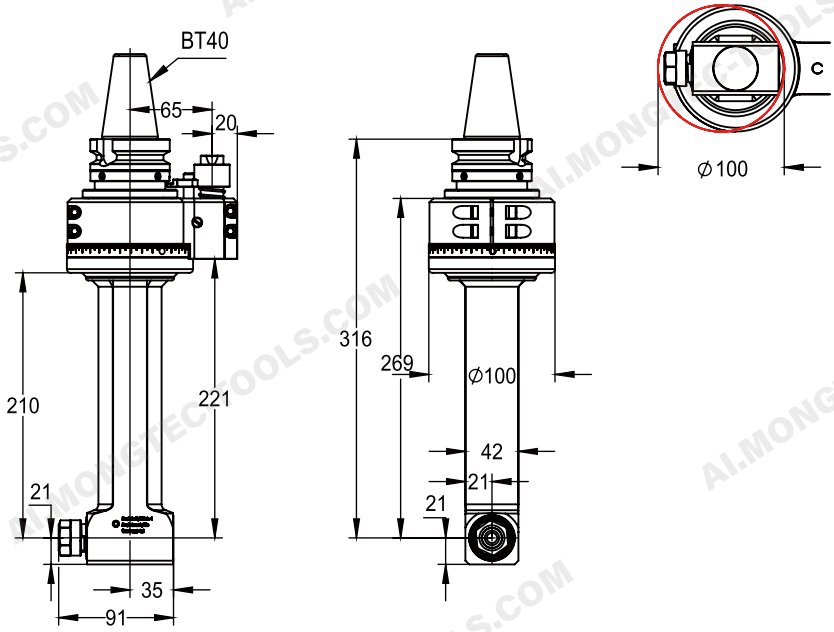

PARAMETERS

Model	BT40QER16Q210
Driving Shank	BT40
More Shank	Can Be Used
Max. RPM	8000 RPM
Output Rotation	CW–CW
Ratio of Transmission	1:1
Through the Diameter	D100
Chucking Range	D1–D10
Tapping	M5-M8
Torque	18.Nm
WT	6.324 kg
Inventory	Stock
Custom	Customization

Specifications and dimensions are for reference only and subject to change without notice. Please confirm the latest specifications before ordering.

BT40QER16Q260

1. The shell is made of QT500Q7, through aging treatment, precision processing, with high rigidity, high precision, long life and other characteristics. The minimum pass allowed Phi D100
2. The main drive shaft is made of special alloy material, processed by precise heat treatment process, and finally finely ground and formed to achieve high transmission stability.
3. Gear wheel bearings are imported to ensure the transmission of high torque, low noise.
4. Input and output forms are diverse and flexible, not limited to BT or ER interface,can meet all kinds of precision machining equipment, can be used for milling,drilling, tapping, grinding and other processes of processing.

Shank with

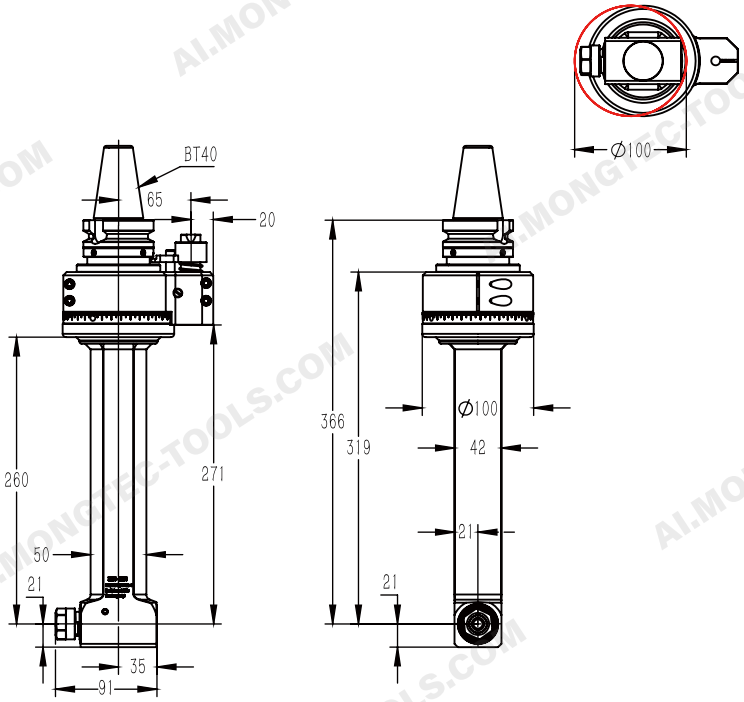

PARAMETERS

Model	BT40QER16Q260
Driving Shank	BT40
More Shank	Can Be Used
Max. RPM	8000 RPM
Output Rotation	CW–CW
Ratio of Transmission	1:1
Through the Diameter	D100
Chucking Range	D1–D10
Tapping	M5-M8
Torque	18.Nm
WT	7.073kg
Inventory	Stock
Custom	Customization

Specifications and dimensions are for reference only and subject to change without notice. Please confirm the latest specifications before ordering.

BT40QER16Q2X

1. The shell is made of QT500Q7, through aging treatment, precision machining, with high rigidity, high precision, long life and other characteristics. The minimum pass allowed Phi D132
2. The main drive shaft is made of special alloy material, processed by strict heat treatment process, and finally finely ground to achieve high transmission stability.
3. Gear wheel bearings are imported to ensure the transmission of high torque, low noise.
4. Input and output forms are diverse and flexible, not limited to BT or ER interface,can meet all kinds of precision machining equipment, can be used for milling,drilling, tapping, grinding and other processes of processing.

Shank with

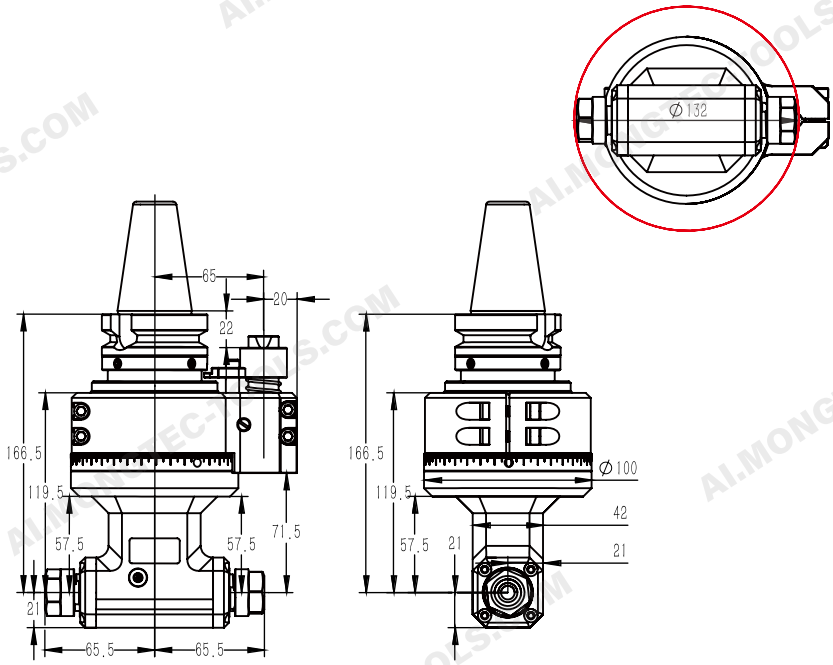

PARAMETERS

46.Nm	BT40QER16Q2X
Driving Shank	BT40/HSK63A/SK40
More Shank	Can Be Used
Max. RPM	8000 RPM
Output Rotation	CW–CW
Ratio of Transmission	1:1
Through the Diameter	D132
Chucking Range	D1-D10
Tapping	M6-M10
Torque	46.Nm
WT	4.163 kg
Inventory	Stock
Custom	Customization

Specifications and dimensions are for reference only and subject to change without notice. Please confirm the latest specifications before ordering.

BT40QER25Q66

1. The shell is made of QT500Q7, through aging treatment, precision processing, withhigh rigidity, high precision, long life and other characteristics. The minimum pass allowed Phi D130
2. The main drive shaft is made of special alloy material, processed by precise heat treatment process, and finally finely ground and formed to achieve high transmission stability.
3. Gear wheel bearings are imported to ensure the transmission of high torque, low noise.
4. Input and output forms are diverse and flexible, not limited to BT or ER interface,can meet all kinds of precision machining equipment, can be used for milling,drilling, tapping, grinding and other processes of processing.

Shank with

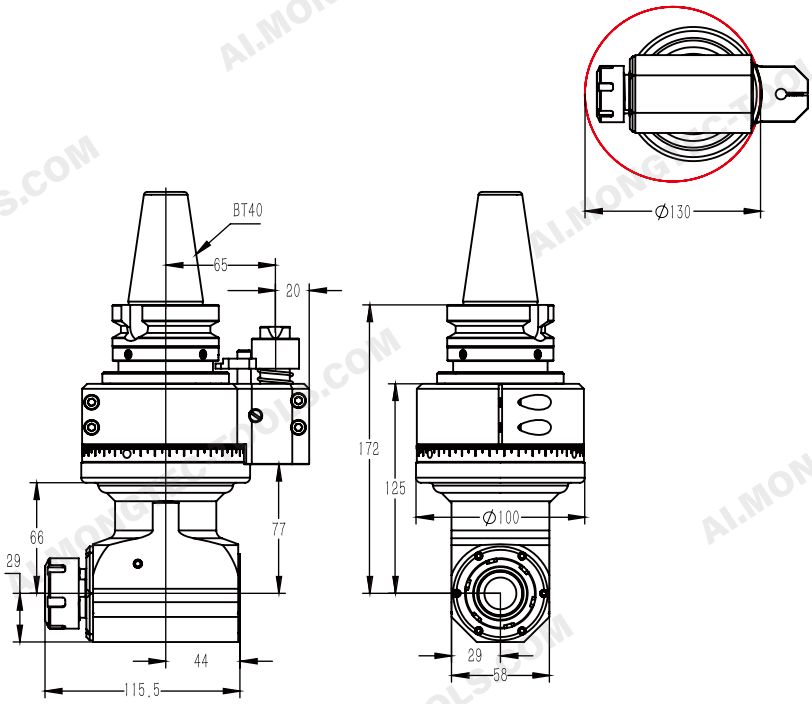

PARAMETERS

Model	BT40QER25Q66
Driving Shank	BT40
More Shank	Can Be Used
Max. RPM	6800 RPM
Output Rotation	CW–CW
Ratio of Transmission	1:1
Through the Diameter	D130
Chucking Range	D1-D16
Tapping	M6-M14
Torque	46.Nm
WT	6.118 kg
Inventory	Stock
Custom	Customization

Specifications and dimensions are for reference only and subject to change without notice. Please confirm the latest specifications before ordering.

BT40QER25Q110

1. The shell is made of QT500Q7, through aging treatment, precision machining, with high rigidity, high precision, long life and other characteristics. The minimum pass allowed Phi D130
2. The main drive shaft is made of special alloy material, processed by strict heat treatment process, and finally finely ground to achieve high transmission stability.
3. Gear wheel bearings are imported to ensure the transmission of high torque, low noise.
4. Input and output forms are diverse and flexible, not limited to BT or ER interface,can meet all kinds of precision machining equipment, can be used for milling,drilling, tapping, grinding and other processes of processing.

Shank with

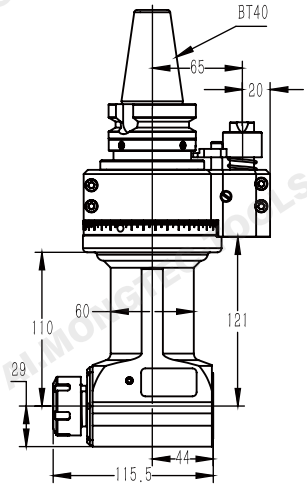

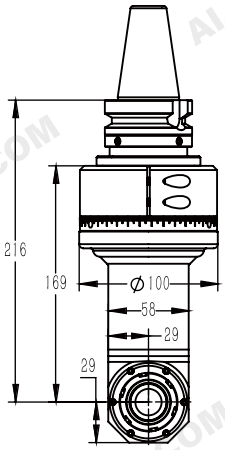

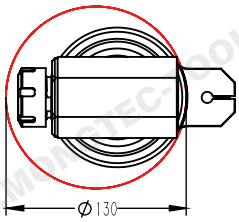

PARAMETERS

Model	BT40QER25Q110
Driving Shank	BT40
More Shank	Can Be Used
Max. RPM	6800 RPM
Output Rotation	CW–CW
Ratio of Transmission	1:1
Through the Diameter	D130
Chucking Range	D1-D16
Tapping	M6-M14
Torque	46.Nm
WT	6.677 kg
Inventory	Stock
Custom	Customization

Specifications and dimensions are for reference only and subject to change without notice. Please confirm the latest specifications before ordering.

BT40QER25Q160

1. The shell is made of QT500Q7, through aging treatment, precision processing, with high rigidity, high precision, long life and other characteristics. The minimum pass allowed Phi D130
2. The main drive shaft is made of special alloy material, processed by precise heat treatment process, and finally finely ground and formed to achieve high transmission stability.
3. Gear wheel bearings are imported to ensure the transmission of high torque, low noise.
4. Input and output forms are diverse and flexible, not limited to BT or ER interface, can meet all kinds of precision machining equipment, can be used for milling,drilling, tapping, grinding and other processes of processing.

Shank with

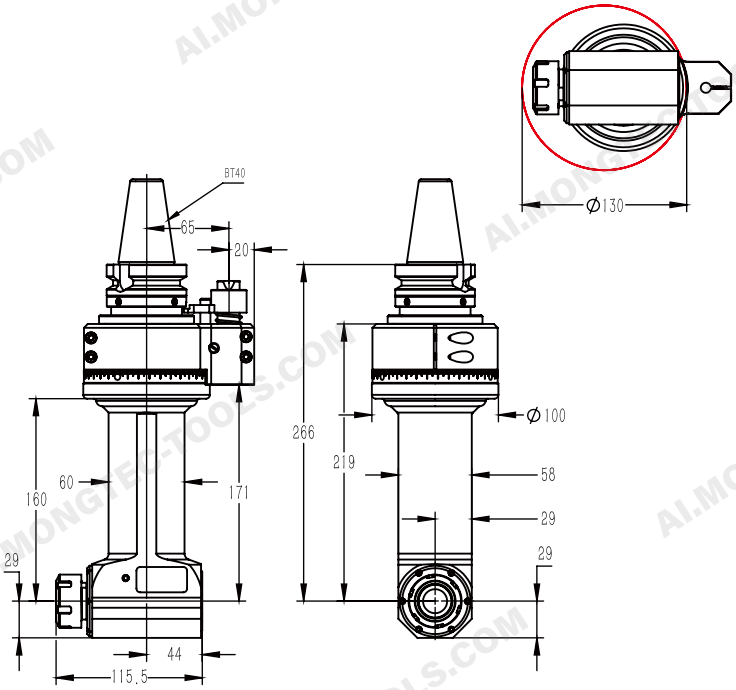

PARAMETERS

Model	BT40QER25Q160
Driving Shank	BT40
More Shank	Can Be Used
Max. RPM	6800 RPM
Output Rotation	CW–CW
Ratio of Transmission	1:1
Through the Diameter	D130
Chucking Range	D1-D16
Tapping	M6-M14
Torque	46.Nm
WT	7.303 kg
Inventory	Stock
Custom	Customization

Specifications and dimensions are for reference only and subject to change without notice. Please confirm the latest specifications before ordering.

BT40QER25Q210

1. The shell is made of QT500Q7, through aging treatment, precision machining, with high rigidity, high precision, long life and other characteristics. The minimum pass allowed Phi D130
2. The main drive shaft is made of special alloy material, processed by strict heat treatment process, and finally finely ground to achieve high transmission stability.
3. Gear wheel bearings are imported to ensure the transmission of high torque, low noise.
4. Input and output forms are diverse and flexible, not limited to BT or ER interface,can meet all kinds of precision machining equipment, can be used for milling,drilling, tapping, grinding and other processes of processing.

Shank with

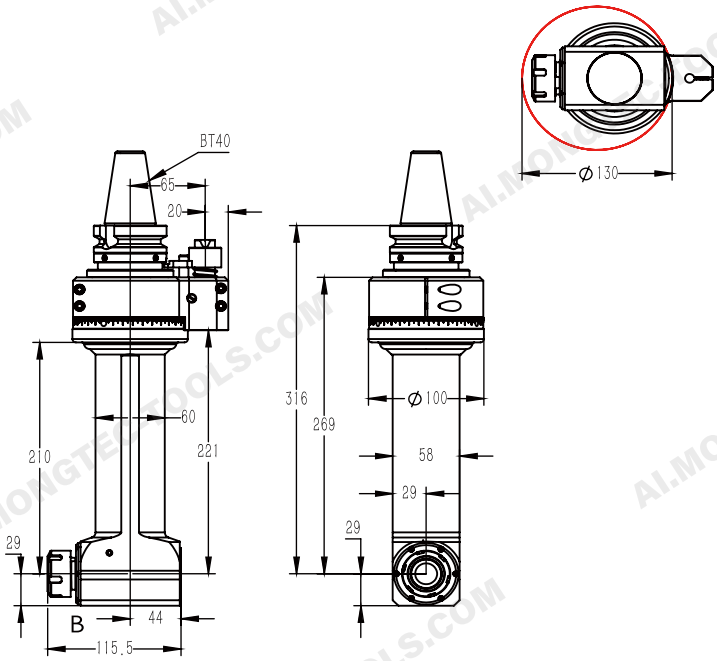

PARAMETERS

Model	BT40QER25Q210
Driving Shank	BT40
More Shank	Can Be Used
Max. RPM	6800 RPM
Output Rotation	CW–CW
Ratio of Transmission	1:1
Through the Diameter	D130
Chucking Range	D1-D16
Tapping	M6-M14
Torque	46.Nm
WT	8.528 kg
Inventory	Stock
Custom	Customization

Specifications and dimensions are for reference only and subject to change without notice. Please confirm the latest specifications before ordering.

BT40QER25Q2X

1. The shell is made of QT500Q7, through aging treatment, precision processing, with high rigidity, high precision, long life and other characteristics. The minimum pass allowed Phi D140
2. The main drive shaft is made of special alloy material, processed by precise heat treatment process, and finally finely ground and formed to achieve high transmission stability.
3. Gear wheel bearings are imported to ensure the transmission of high torque, low noise.
4. Input and output forms are diverse and flexible, not limited to BT or ER interface,can meet all kinds of precision machining equipment, can be used for milling,drilling, tapping, grinding and other processes of processing.

Shank with

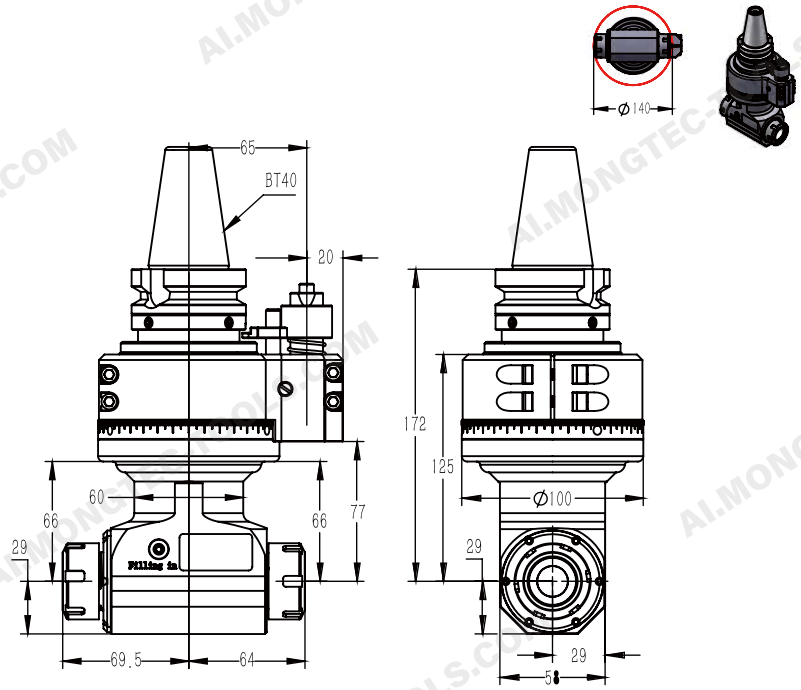

PARAMETERS

Model	BT40QER25Q2X
Driving Shank	BT40
More Shank	Can Be Used
Max. RPM	6800 RPM
Output Rotation	CW–CW
Ratio of Transmission	1:1
Through the Diameter	D140
Chucking Range	D1-D16
Tapping	M6-M14
Torque	46.Nm
WT	6.9 kg
Inventory	Stock
Custom	Customization

Specifications and dimensions are for reference only and subject to change without notice. Please confirm the latest specifications before ordering.

BT40QER25Q2XQ125

1. The shell is made of QT500Q7, through aging treatment, precision machining, withhigh rigidity, high precision, long life and other characteristics. The minimum pass allowed Phi D140
2. The main drive shaft is made of special alloy material, processed by strict heat treatment process, and finally finely ground to achieve high transmission stability.
3. Gear wheel bearings are imported to ensure the transmission of high torque, low noise.
4. Input and output forms are diverse and flexible, not limited to BT or ER interface,can meet all kinds of precision machining equipment, can be used for milling,drilling, tapping, grinding and other processes of process

Shank with

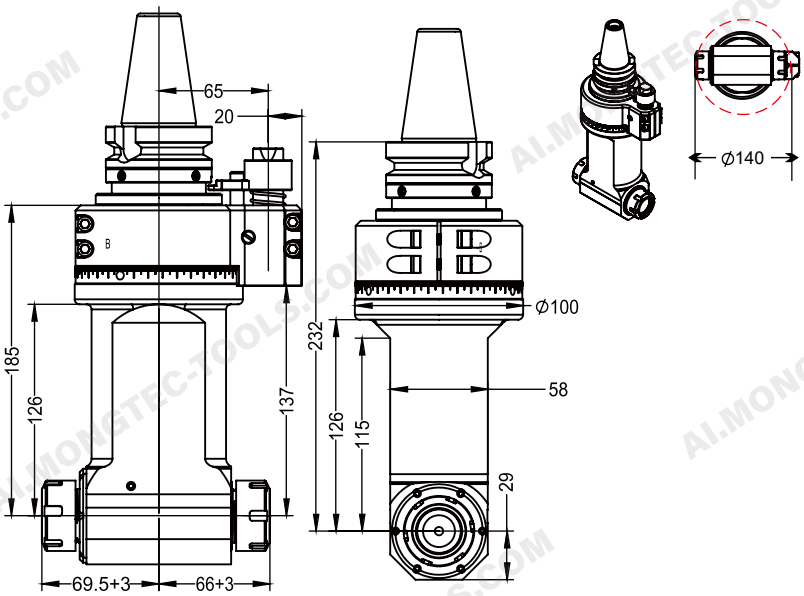

PARAMETERS

Model	BT40QER25Q2XQ125
Driving Shank	BT40/BBT40
More Shank	Can Be Used
Max. RPM	6800 RPM
Output Rotation	CW–CW
Ratio of Transmission	1:1
Through the Diameter	D140
Chucking Range	D1-D16
Tapping	M6-M14
Torque	46.Nm
WT	9.13 kg
Inventory	Stock
Custom	Customization

Specifications and dimensions are for reference only and subject to change without notice. Please confirm the latest specifications before ordering.

BT40QER32Q80

1. The shell is made of QT500Q7, through aging treatment, precision processing, with high rigidity, high precision, long life and other characteristics. The minimum pass allowed Phi D155
2. The main drive shaft is made of special alloy material, processed by precise heat treatment process, and finally finely ground and formed to achieve high transmission stability.
3. Gear wheel bearings are imported to ensure the transmission of high torque, low noise.
4. Input and output forms are diverse and flexible, not limited to BT or ER interface,can meet all kinds of precision machining equipment, can be used for milling,drilling, tapping, grinding and other processes of processing.

Shank with

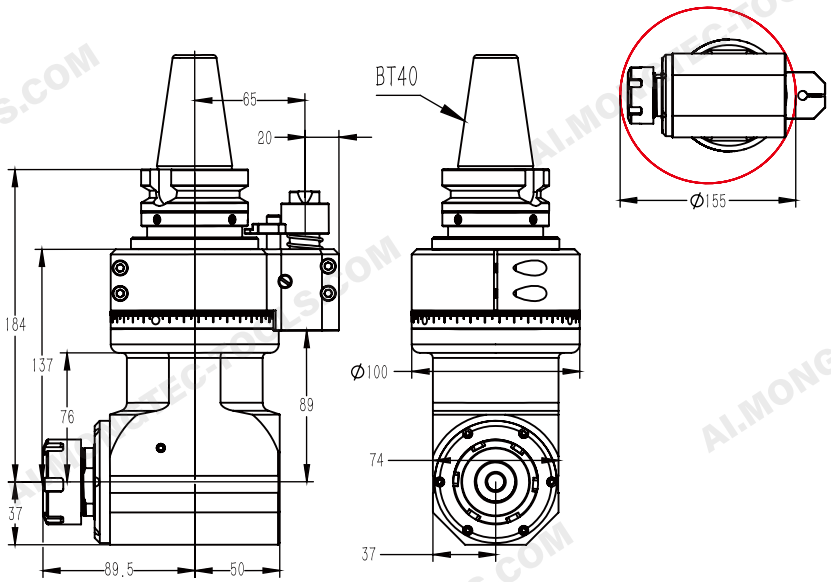

PARAMETERS

Model	BT40QER32Q80
Driving Shank	BT40
More Shank	Can Be Used
Max. RPM	5000 RPM
Output Rotation	CW–CW
Ratio of Transmission	1:1
Through the Diameter	D155
Chucking Range	D1-D20
Tapping	M6-M16
Torque	65.Nm
WT	6.669 kg
Inventory	Stock
Custom	Customization

Specifications and dimensions are for reference only and subject to change without notice. Please confirm the latest specifications before ordering.

BT40QER11MQ60

1. The shell is made of aviation aluminum, through aging treatment, precision machining, with high rigidity, high precision, long life and other characteristics. The minimum pass allowed Phi D55
2. The main drive shaft is made of special alloy material, processed by strict heat treatment process, and finally finely ground to achieve high transmission stability.
3. Gear wheel bearings are imported to ensure the transmission of high torque, low noise.
4. Input and output forms are diverse and flexible, not limited to BT or ER interface,can meet all kinds of precision machining equipment, can be used for milling,drilling, tapping, grinding and other processes of processing.

Shank with

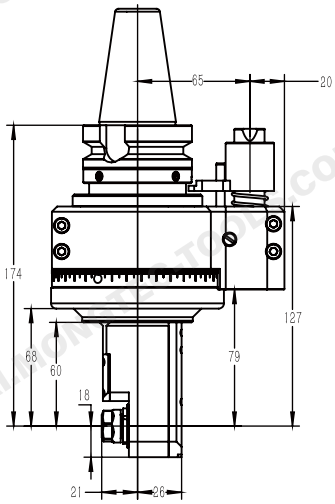

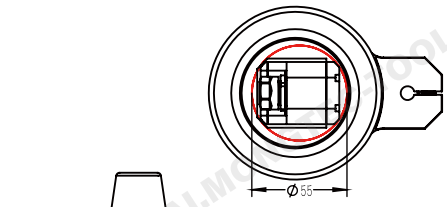

PARAMETERS

Model	BT40QER11MQ60
Driving Shank	BT40
More Shank	Can Be Used
Max. RPM	6000 RPM
Output Rotation	CW–CW
Ratio of Transmission	1:1
Through the Diameter	D55
Chucking Range	D1-D7
Tapping	M5-M6
Torque	10.8 Nm
WT	4.828 kg
Inventory	Stock
Custom	Customization

Specifications and dimensions are for reference only and subject to change without notice. Please confirm the latest specifications before ordering.

BT40QER11MQ100

1. The shell is made of aviation aluminum, through aging treatment, precision processing, with high rigidity, high precision, long life and other characteristics.The minimum pass allowed Phi D55
2. The main drive shaft is made of special alloy material, processed by precise heat treatment process, and finally finely ground and formed to achieve high transmission stability.
3. Gear wheel bearings are imported to ensure the transmission of high torque, low noise.
4. Input and output forms are diverse and flexible, not limited to BT or ER interface,can meet all kinds of precision machining equipment, can be used for milling,drilling, tapping, grinding and other processes of processing.

Shank with

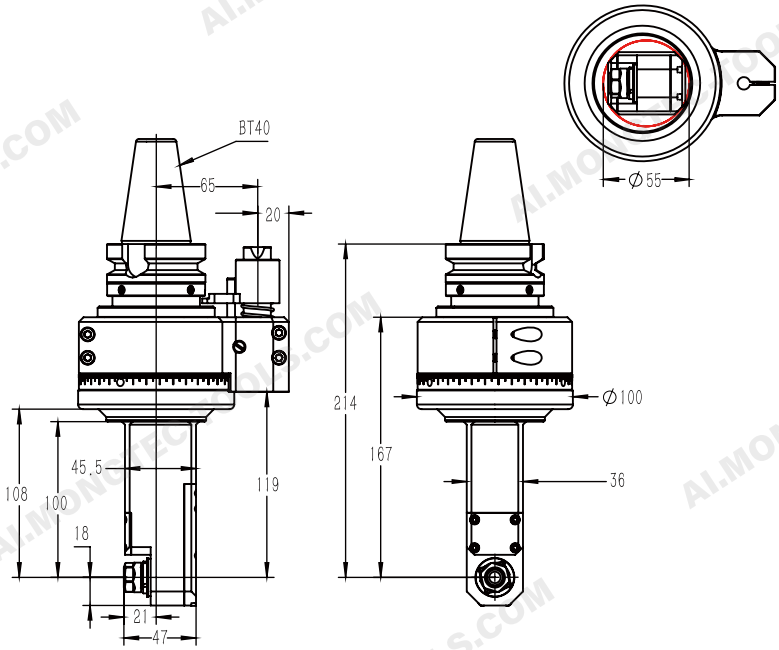

PARAMETERS

Model	BT40QER11MQ100
Driving Shank	BT40
More Shank	Can Be Used
Max. RPM	6000 RPM
Output Rotation	CW–CW
Ratio of Transmission	1:1
Through the Diameter	D55
Chucking Range	D1-D7
Tapping	M5-M6
Torque	10.8 Nm
WT	5.15 kg
Inventory	Stock
Custom	Customization

Specifications and dimensions are for reference only and subject to change without notice. Please confirm the latest specifications before ordering.

BT40QER11MQ140

1. The shell is made of aviation aluminum, through aging treatment, precision machining, with high rigidity, high precision, long life and other characteristics. The minimum pass allowed Phi D55
2. The main drive shaft is made of special alloy material, processed by strict heat treatment process, and finally finely ground to achieve high transmission stability.
3. Gear wheel bearings are imported to ensure the transmission of high torque, low noise.
4. Input and output forms are diverse and flexible, not limited to BT or ER interface,can meet all kinds of precision machining equipment, can be used for milling,drilling, tapping, grinding and other processes

Shank with

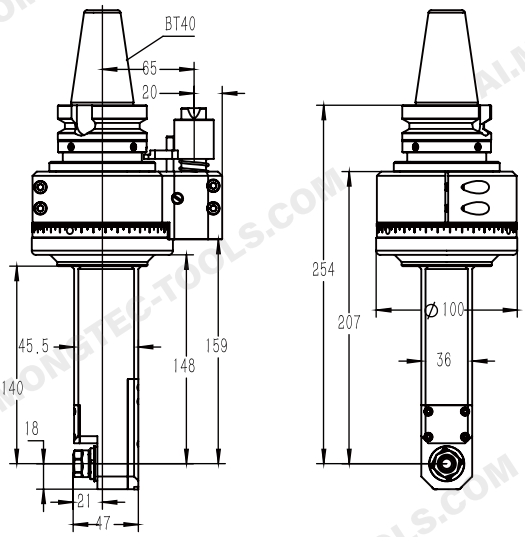

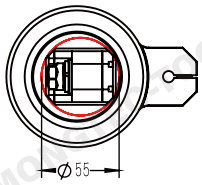

PARAMETERS

Model	BT40QER11MQ140
Driving Shank	BT40
More Shank	Can Be Used
Max. RPM	6000 RPM
Output Rotation	CW-CW
Ratio of Transmission	1:1
Through the Diameter	D55
Chucking Range	D1-D7
Tapping	M5-M6
Torque	10.8 Nm
WT	5.480kg
Inventory	Stock
Custom	Customization

Specifications and dimensions are for reference only and subject to change without notice. Please confirm the latest specifications before ordering.

BT40QER11MQ210

1. The shell is made of aviation aluminum, through aging treatment, precision processing, with high rigidity, high precision, long life and other characteristics. The minimum pass allowed Phi D55
2. The main drive shaft is made of special alloy material, processed by precise heat treatment process, and finally finely ground and formed to achieve high transmission stability.
3. Gear wheel bearings are imported to ensure the transmission of high torque, low noise.
4. Input and output forms are diverse and flexible, not limited to BT or ER interface,can meet all kinds of precision machining equipment, can be used for milling,drilling, tapping, grinding and other processes of processing.

Shank with

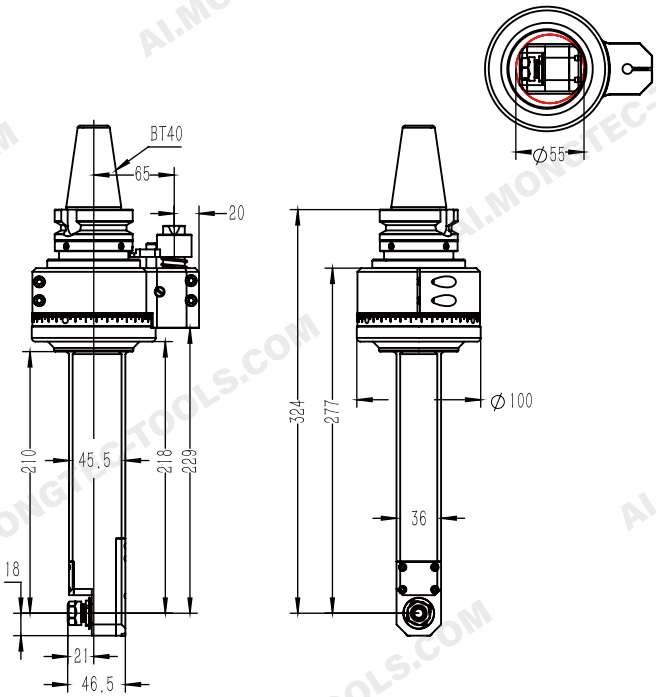

PARAMETERS

Model	BT40QER11MQ210
Driving Shank	BT40
More Shank	Can Be Used
Max. RPM	6000 RPM
Output Rotation	CW-CW
Ratio of Transmission	1:1
Through the Diameter	D55
Chucking Range	D1-D7
Tapping	M5-M6
Torque	10.8 Nm
WT	6.009 kg
Inventory	Stock
Custom	Customization

Specifications and dimensions are for reference only and subject to change without notice. Please confirm the latest specifications before ordering.

BT40QER16MQ100

1. The shell is made of aviation aluminum, through aging treatment, precision machining, with high rigidity, high precision, long life and other characteristics. The minimum pass allowed Phi D77
2. The main drive shaft is made of special alloy material, processed by strict heat treatment process, and finally finely ground to achieve high transmission stability.
3. Gear wheel bearings are imported to ensure the transmission of high torque, low noise.
4. Input and output forms are diverse and flexible, not limited to BT or ER interface,can meet all kinds of precision machining equipment, can be used for milling,drilling, tapping, grinding and other processes of processing.

Shank with

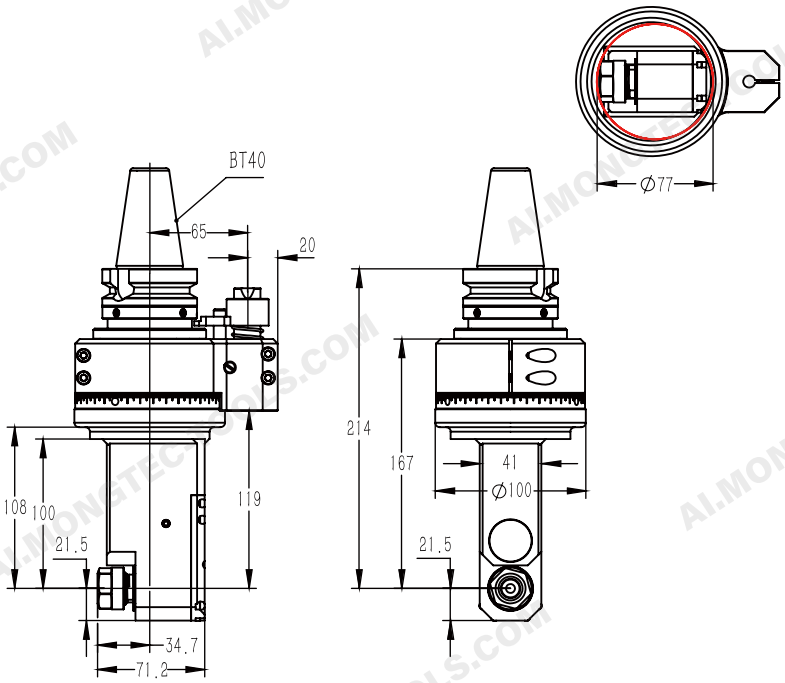

PARAMETERS

Model	BT40QER16MQ100
Driving Shank	BT40
More Shank	Can Be Used
Max. RPM	8000 RPM
Output Rotation	CW-CW
Ratio of Transmission	1:1
Through the Diameter	D77
Chucking Range	D1-D10
Tapping	M5-M8
Torque	18. Nm
WT	5.828 kg
Inventory	Stock
Custom	Customization

Specifications and dimensions are for reference only and subject to change without notice. Please confirm the latest specifications before ordering.

BT40QER16MQ170

1. The shell is made of aviation aluminum, through aging treatment, precision processing, with high rigidity, high precision, long life and other characteristics. The minimum pass allowed Phi D76
2. The main drive shaft is made of special alloy material, processed by precise heat treatment process, and finally finely ground and formed to achieve high transmission stability.
3. Gear wheel bearings are imported to ensure the transmission of high torque, low noise.
4. Input and output forms are diverse and flexible, not limited to BT or ER interface, can meet all kinds of precision machining equipment, can be used for milling,drilling, tapping, grinding and other processes of processing.

Shank with

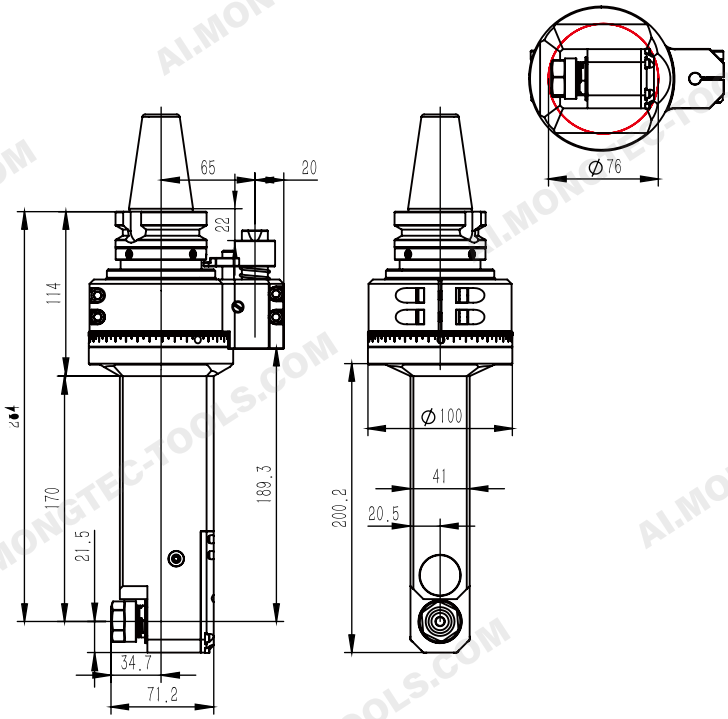

PARAMETERS

Model	BT40QER16MQ170
Driving Shank	BT40
More Shank	Can Be Used
Max. RPM	8000 RPM
Output Rotation	CW-CW
Ratio of Transmission	1:1
Through the Diameter	D76
Chucking Range	D1-D10
Tapping	M 6 - M 1 0
Torque	18. Nm
WT	6.2 kg
Inventory	Stock
Custom	Customization

Specifications and dimensions are for reference only and subject to change without notice. Please confirm the latest specifications before ordering.

BT40QER20MQ100

1. The shell is made of aviation aluminum, through aging treatment, precision machining, with high rigidity, high precision, long life and other characteristics. The minimum pass allowed Phi D85
2. The main drive shaft is made of special alloy material, processed by strict heat treatment process, and finally finely ground to achieve high transmission stability.
3. Gear wheel bearings are imported to ensure the transmission of high torque, low noise.
4. Input and output forms are diverse and flexible, not limited to BT or ER interface,can meet all kinds of precision machining equipment, can be used for milling,drilling, tapping, grinding and other processes of processing.

Shank with

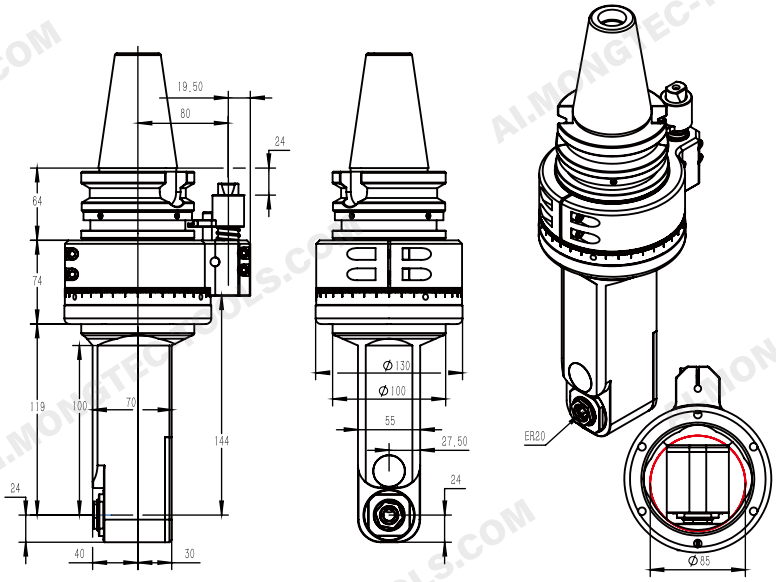

PARAMETERS

Model	BT40QER20MQ100
Driving Shank	BT40
More Shank	Can Be Used
Max. RPM	6000 RPM
Output Rotation	CW-CW
Ratio of Transmission	1:1
Through the Diameter	D85
Chucking Range	D1-D13
Tapping	M5-M10
Torque	30. Nm
WT	5.5 kg
Inventory	Stock
Custom	Customization

Specifications and dimensions are for reference only and subject to change without notice. Please confirm the latest specifications before ordering.

BT40QER20MQ150

1. The shell is made of aviation aluminum, through aging treatment, precision processing, with high rigidity, high precision, long life and other characteristics.The minimum pass allowed Phi D85
2. The main drive shaft is made of special alloy material, processed by precise heat treatment process, and finally finely ground and formed to achieve high transmission stability.
3. Gear wheel bearings are imported to ensure the transmission of high torque, low noise.
4. Input and output forms are diverse and flexible, not limited to BT or ER interface,can meet all kinds of precision machining equipment, can be used for milling,drilling, tapping, grinding and other processes of processing.

Shank with

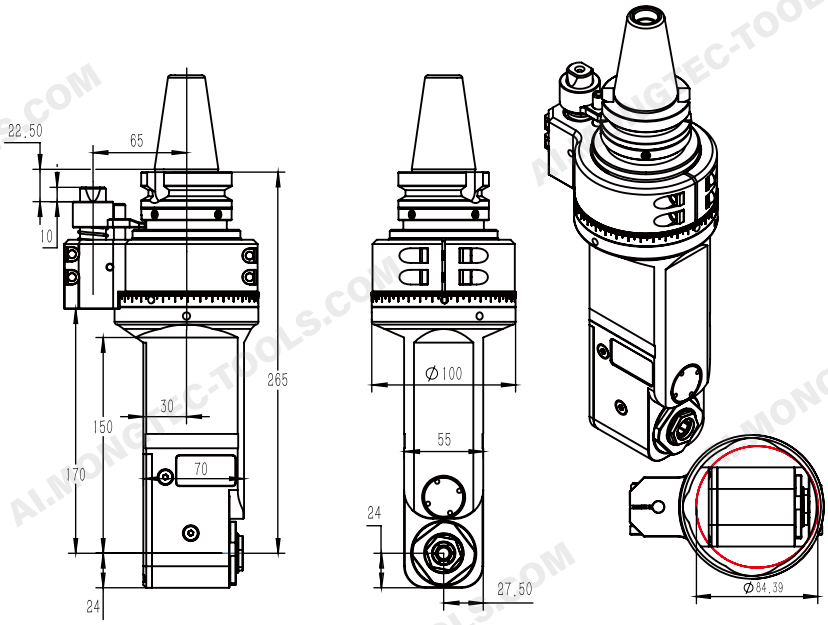

PARAMETERS

Model	BT40QER20MQ150
Driving Shank	BT40
More Shank	Can Be Used
Max. RPM	6000 RPM
Output Rotation	CW-CW
Ratio of Transmission	1:1
Through the Diameter	D85
Chucking Range	D1-D13
Tapping	M5-M10
Torque	30. Nm
WT	6 kg
Inventory	Stock
Custom	Customization

Specifications and dimensions are for reference only and subject to change without notice. Please confirm the latest specifications before ordering.

BT40QER20MQ180

1. The shell is made of aviation aluminum, through aging treatment, precision machining, with high rigidity, high precision, long life and other characteristics. The minimum pass allowed Phi D85
2. The main drive shaft is made of special alloy material, processed by strict heat treatment process, and finally finely ground to achieve high transmission stability.
3. Gear wheel bearings are imported to ensure the transmission of high torque, low noise.
4. Input and output forms are diverse and flexible, not limited to BT or ER interface,can meet all kinds of precision machining equipment, can be used for milling,drilling, tapping, grinding and other processes of processing.

Shank with

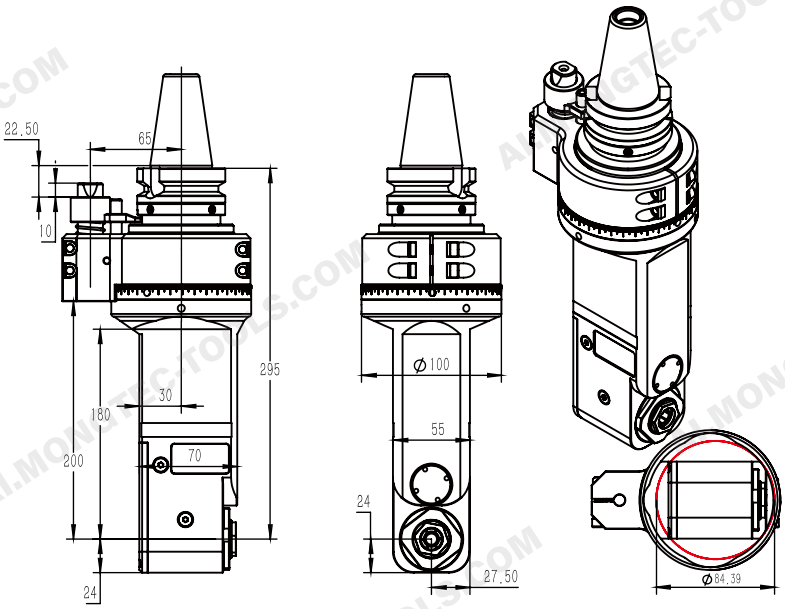

PARAMETERS

Model	BT40QER20MQ180
Driving Shank	BT40
More Shank	Can Be Used
Max. RPM	6000 RPM
Output Rotation	CW-CW
Ratio of Transmission	1 : 1
Through the Diameter	D85
Chucking Range	D1-D13
Tapping	M5-M10
Torque	30. Nm
WT	6.3 kg
Inventory	Stock
Custom	Customization

Specifications and dimensions are for reference only and subject to change without notice. Please confirm the latest specifications before ordering.

BT40QAER25MQ100

1. The shell is made of aviation aluminum, through aging treatment, precision processing, with high rigidity, high precision, long life and other characteristics.The minimum pass allowed Phi D95
2. The main drive shaft is made of special alloy material, processed by precise heat treatment process, and finally finely ground and formed to achieve high transmission stability.
3. Gear wheel bearings are imported to ensure the transmission of high torque, low noise.
4. Input and output forms are diverse and flexible, not limited to BT or ER interface,can meet all kinds of precision machining equipment, can be used for milling,drilling, tapping, grinding and other processes of processing.

Shank with

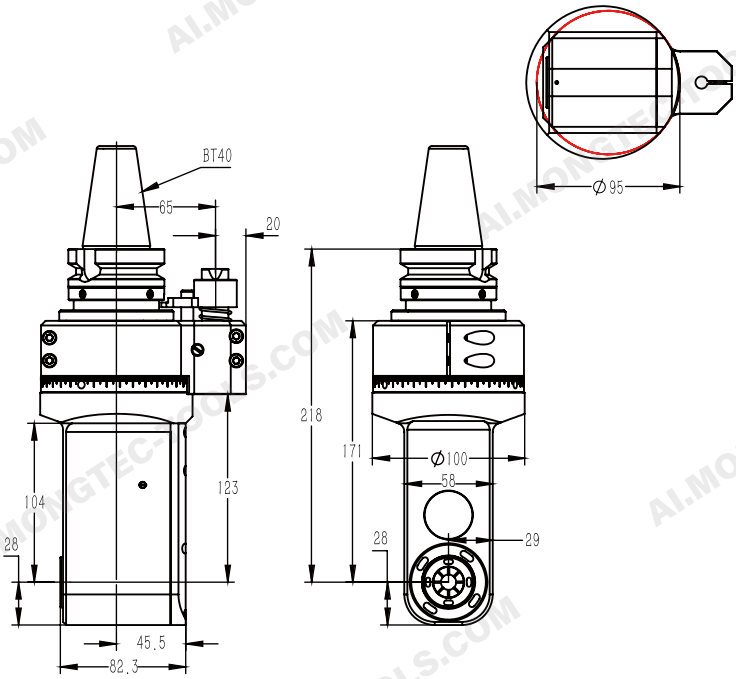

PARAMETERS

Model	BT40QAER25MQ100
Driving Shank	BT40
More Shank	Can Be Used
Max. RPM	6000 RPM
Output Rotation	CW-CW
Ratio of Transmission	1:1
Through the Diameter	D95
Chucking Range	D1-D16
Tapping	M6-M14
Torque	46. Nm
WT	5.566 kg
Inventory	Stock
Custom	Customization

Specifications and dimensions are for reference only and subject to change without notice. Please confirm the latest specifications before ordering.

BT40QAER25MQ150

1. The shell is made of aviation aluminum, through aging treatment, precision machining, with high rigidity, high precision, long life and other characteristics. The minimum pass allowed Phi D95
2. The main drive shaft is made of special alloy material, processed by strict heat treatment process, and finally finely ground to achieve high transmission stability.
3. Gear wheel bearings are imported to ensure the transmission of high torque, low noise.
4. Input and output forms are diverse and flexible, not limited to BT or ER interface,can meet all kinds of precision machining equipment, can be used for milling,drilling, tapping, grinding and other processes of processing.

Shank with

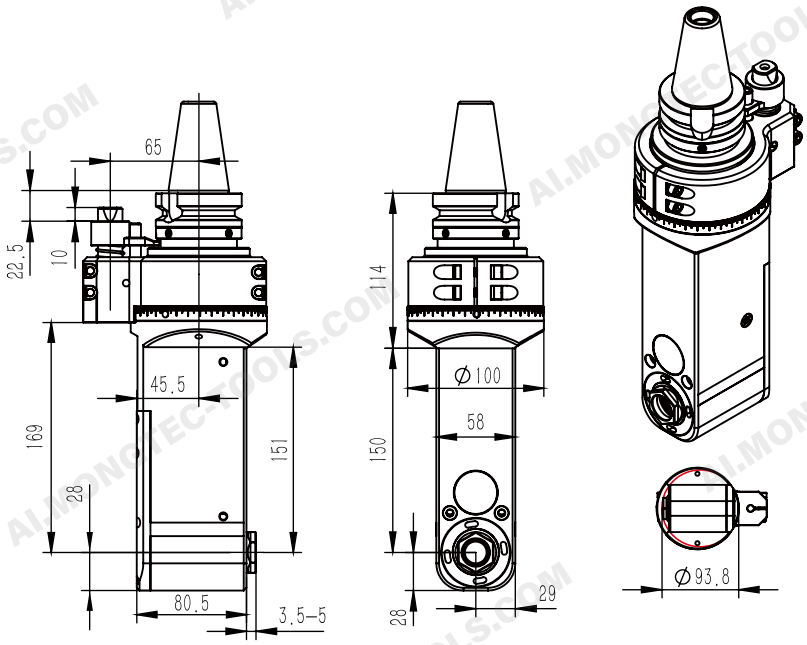

PARAMETERS

Model	BT40QAER25MQ150
Driving Shank	BT40
More Shank	Can Be Used
Max. RPM	6000 RPM
Output Rotation	CW-CW
Ratio of Transmission	1:1
Through the Diameter	D95
Chucking Range	D1-D16
Tapping	M6-M14
Torque	46. Nm
WT	5.797 kg
Inventory	Stock
Custom	Customization

Specifications and dimensions are for reference only and subject to change without notice. Please confirm the latest specifications before ordering.

BT40QPER13

1. The shell is made of 40Cr, through aging treatment, precision processing, with high rigidity, high precision, long life and other characteristics. The minimum pass allowed Phi D75
2. The main drive shaft is made of special alloy material, processed by precise heat treatment process, and finally finely ground and formed to achieve high transmission stability.
3. Gear wheel bearings are imported to ensure the transmission of high torque, low noise.
4. Input and output forms are diverse and flexible, not limited to BT or ER interface,can meet all kinds of precision machining equipment, can be used for milling,drilling, tapping, grinding and other processes of processing.

Shank with

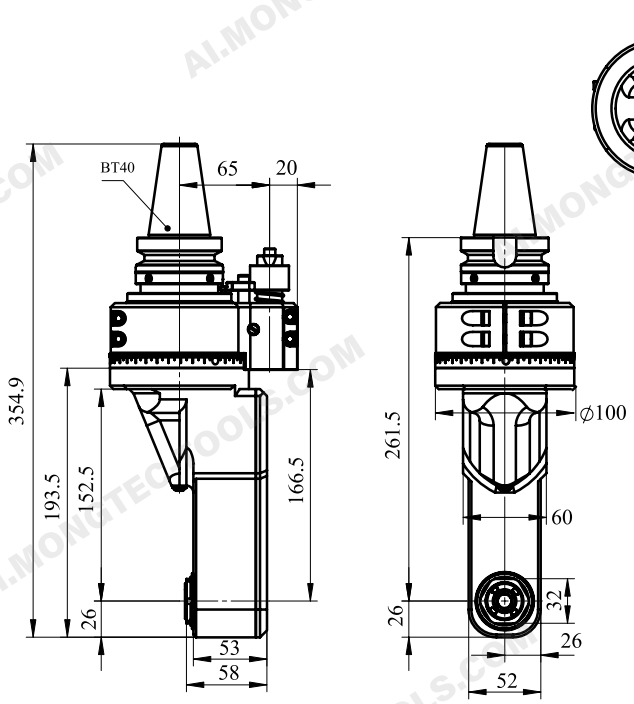

PARAMETERS

Model	BT40QPER13
Driving Shank	BT40
More Shank	Can Be Used
Max. RPM	6000 RPM
Output Rotation	CW-CW
Ratio of Transmission	1:1
Through the Diameter	D75
Chucking Range	D1-D13
Tapping	M5-M12
Torque	30. Nm
WT	7.842 kg
Inventory	Stock
Custom	Customization

Specifications and dimensions are for reference only and subject to change without notice. Please confirm the latest specifications before ordering.

BT40QPER16

1. The shell is made of 40Cr, through aging treatment, precision machining, with high rigidity, high precision, long life and other characteristics. The minimum pass allowed Phi D51
2. The main drive shaft is made of special alloy material, processed by strict heat treatment process, and finally finely ground to achieve high transmission stability.
3. Gear wheel bearings are imported to ensure the transmission of high torque, low noise.
4. Input and output forms are diverse and flexible, not limited to BT or ER interface,can meet all kinds of precision machining equipment, can be used for milling,drilling, tapping, grinding and other processes of processing.

Shank with

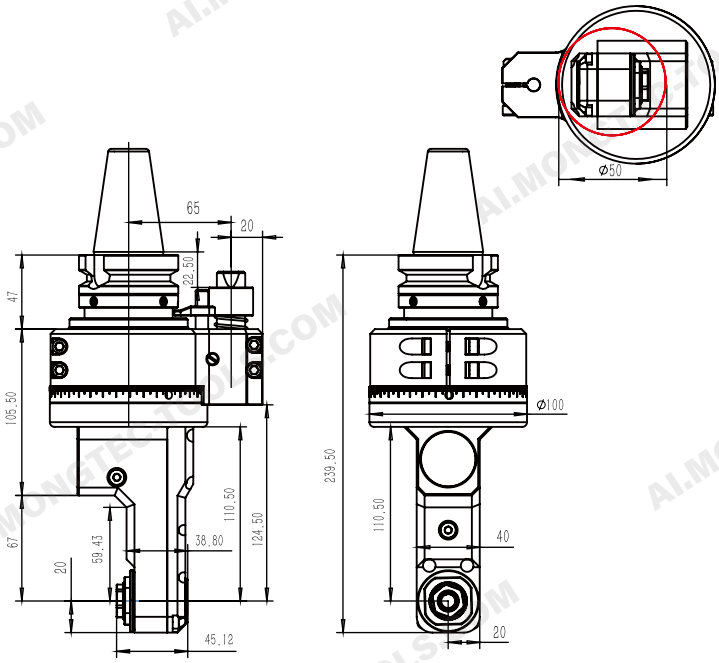

PARAMETERS

Model	BT40QPER16Q59
Driving Shank	BT40
More Shank	Can Be Used
Max. RPM	6000 RPM
Output Rotation	CW-CW
Ratio of Transmission	1:1
Through the Diameter	D51
Chucking Range	D4-D10
Tapping	M5-M10
Torque	25. Nm
WT	5.3 kg
Inventory	Stock
Custom	Customization

Specifications and dimensions are for reference only and subject to change without notice. Please confirm the latest specifications before ordering.

BT40QPER20

1. The shell is made of 40Cr through aging treatment, precision processing, with high rigidity, high precision, long life and other characteristics. The minimum pass allowed Phi D118
2. The main drive shaft is made of special alloy material, processed by precise heat treatment process, and finally finely ground and formed to achieve high transmission stability.
3. Gear wheel bearings are imported to ensure the transmission of high torque, low noise.
4. Input and output forms are diverse and flexible, not limited to BT or ER interface,can meet all kinds of precision machining equipment, can be used for milling,drilling, tapping, grinding and other processes of processing.

Shank with

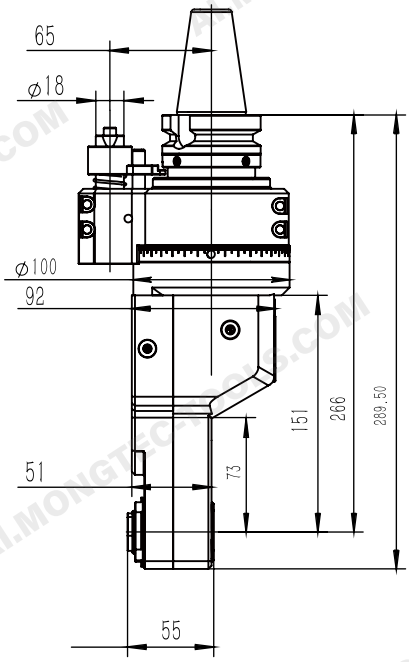

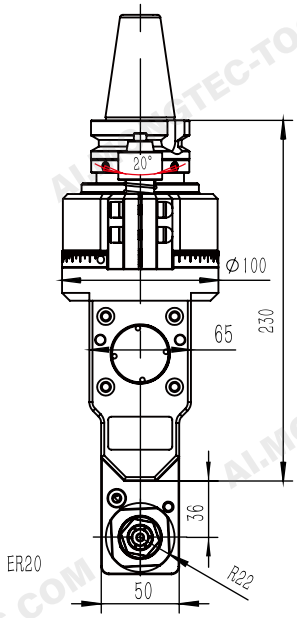

PARAMETERS

Model	BT40QPER20
Driving Shank	BT40
More Shank	Can Be Used
Max. RPM	6000 RPM
Output Rotation	CW-CW
Ratio of Transmission	1:1
Through the Diameter	D118
Chucking Range	D1-D13
Tapping	M5-M10
Torque	30. Nm
WT	6 kg
Inventory	Stock
Custom	Customization

Specifications and dimensions are for reference only and subject to change without notice. Please confirm the latest specifications before ordering.

BT40QFMB22MQF63

1. The shell is made of aviation aluminum, through aging treatment, precision machining, with high rigidity, high precision, long life and other characteristics. The minimum pass allowed Phi D100
2. The main drive shaft is made of special alloy material, processed by strict heat treatment process, and finally finely ground to achieve high transmission stability.
3. Gear wheel bearings are imported to ensure the transmission of high torque, low noise.
4. Input and output forms are diverse and flexible, not limited to BT or ER interface,can meet all kinds of precision machining equipment, can be used for milling,drilling, tapping, grinding and other processes of processing.

Shank with

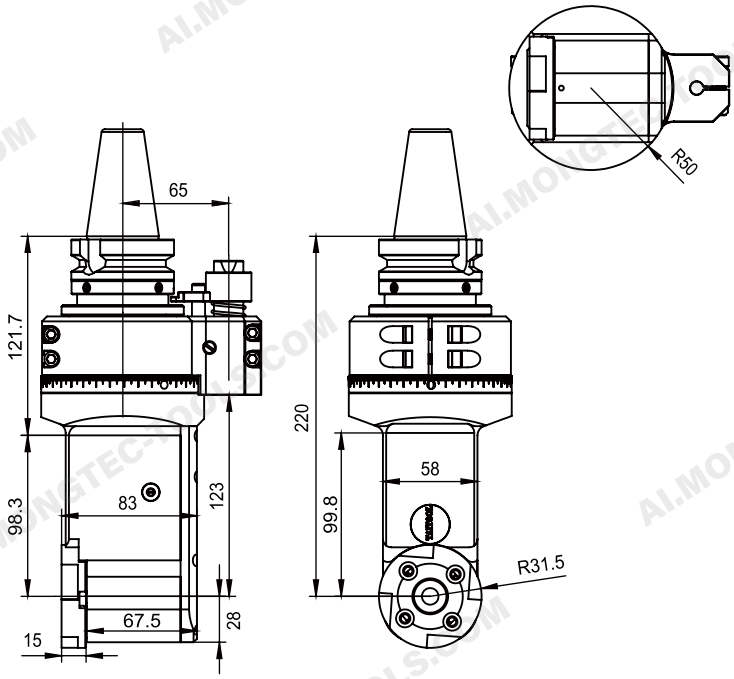

PARAMETERS

Model	BT40QFMB22MQF63
Driving Shank	BT40s
More Shank	Can Be Used
Max. RPM	3500 RPM
Output Rotation	CW-CW
Ratio of Transmission	1:1
Through the Diameter	D100
Chucking Range	D22
Tapping	F63
Torque	46. Nm
WT	5.653 kg
Inventory	Stock
Custom	Customization

Specifications and dimensions are for reference only and subject to change without notice. Please confirm the latest specifications before ordering.

BT40QW13

1. The shell is made of aviation aluminum, through aging treatment, precision processing, with high rigidity, high precision, long life and other characteristics. The minimum pass allowed Phi D130
2. The main drive shaft is made of special alloy material, processed by precise heat treatment process, and finally finely ground and formed to achieve high transmission stability.
3. Gear wheel bearings are imported to ensure the transmission of high torque, low noise.
4. Input and output forms are diverse and flexible, not limited to BT or ER interface,can meet all kinds of precision machining equipment, can be used for milling,drilling, tapping, grinding and other processes of processing.

Shank with

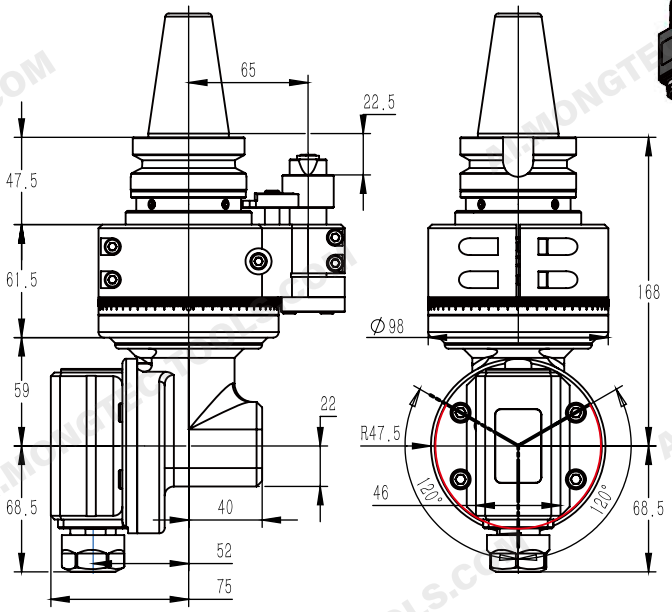

PARAMETERS

Model	BT40QW13
Driving Shank	BT40
More Shank	Can Be Used
Max. RPM	6000 RPM
Output Rotation	CW-CW
Ratio of Transmission	1:1
Through the Diameter	D130
Chucking Range	D1-D13
Tapping	M6-M10
Torque	35. Nm
WT	5.85 kg
Inventory	Stock
Custom	Customization

Specifications and dimensions are for reference only and subject to change without notice. Please confirm the latest specifications before ordering.

BT40QYW16

1. The shell is made of aviation aluminum, through aging treatment, precision machining, with high rigidity, high precision, long life and other characteristics. The minimum pass allowed Phi D118
2. The main drive shaft is made of special alloy material, processed by strict heat treatment process, and finally finely ground to achieve high transmission stability.
3. Gear wheel bearings are imported to ensure the transmission of high torque, low noise.
4. Input and output forms are diverse and flexible, not limited to BT or ER interface,can meet all kinds of precision machining equipment, can be used for milling,drilling, tapping, grinding and other processes of processing.

Shank with

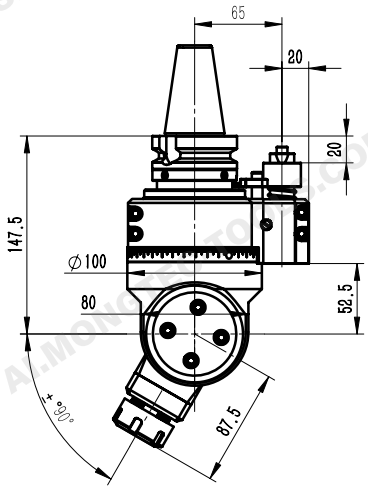

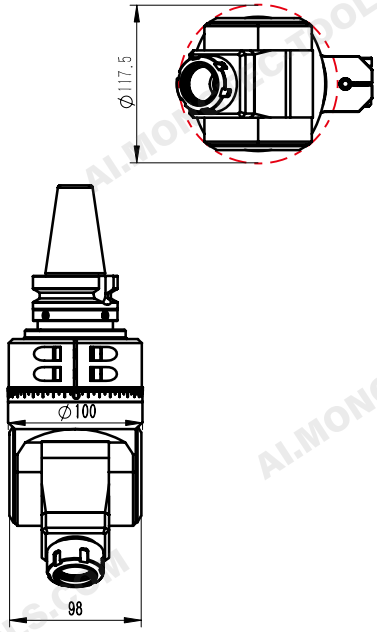

PARAMETERS

Model	BT40QYW16
Driving Shank	BT40
More Shank	Can Be Used
Max. RPM	6000 RPM
Output Rotation	CW-CW
Ratio of Transmission	1:1
Through the Diameter	D118
Chucking Range	D1-D16
Tapping	M6-M14
Torque	46. Nm
WT	6.9 kg
Inventory	Stock
Custom	Customization

Specifications and dimensions are for reference only and subject to change without notice. Please confirm the latest specifications before ordering.

BT40QMNM3LQ150

1. The shell is made of aviation aluminum, through aging treatment, precision processing, with high rigidity, high precision, long life and other characteristics.The minimum pass allowed Phi D25
2. The main drive shaft is made of special alloy material, processed by precise heat treatment process, and finally finely ground and formed to achieve high transmission stability.
3. Gear wheel bearings are imported to ensure the transmission of high torque, low noise.
4. Input and output forms are diverse and flexible, not limited to BT or ER interface,can meet all kinds of precision machining equipment, can be used for milling,drilling, tapping, grinding and other processes of processing.

Shank with

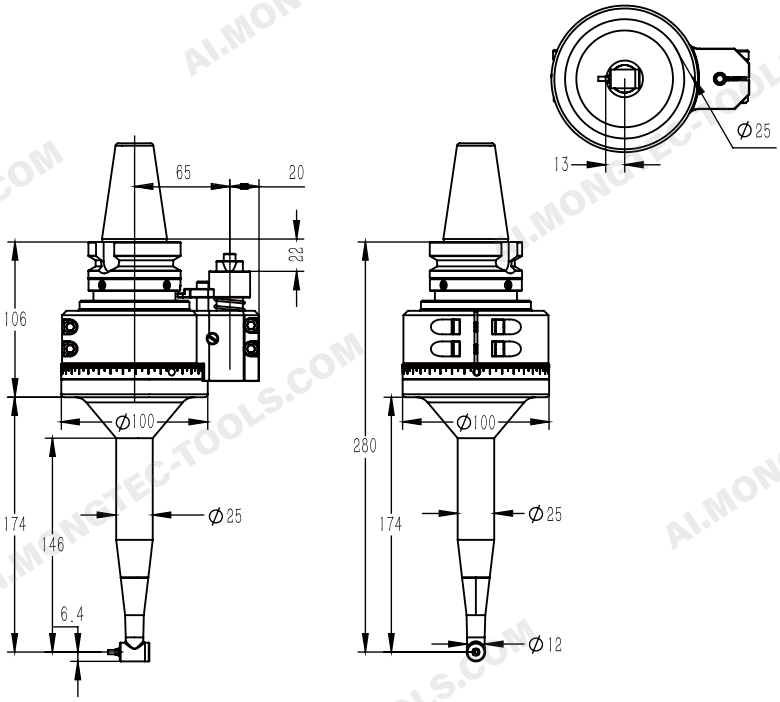

PARAMETERS

Model	BT40QMNM3LQ150
Driving Shank	BT40
More Shank	Can Be Used
Max. RPM	8000 RPM
Output Rotation	CW-CW
Ratio of Transmission	1 : 0.75
Through the Diameter	D25
Chucking Range	D3
Tapping	Milling
Torque	4.3 Nm
WT	4.2 kg
Inventory	Stock
Custom	Customization

Specifications and dimensions are for reference only and subject to change without notice. Please confirm the latest specifications before ordering.

BT50QDC5MQ50M

1. The shell is made of 40Cr, through aging treatment, precision machining, with high rigidity, high precision, long life and other characteristics. The minimum pass allowed Phi D40
2. The main drive shaft is made of special alloy material, processed by strict heat treatment process, and finally finely ground to achieve high transmission stability.
3. Gear wheel bearings are imported to ensure the transmission of high torque, low noise.
4. Input and output forms are diverse and flexible, not limited to BT or ER interface, can meet all kinds of precision machining equipment, can be used for milling,drilling, tapping, grinding and other processes of processing.

Shank with

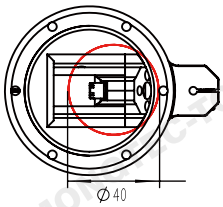

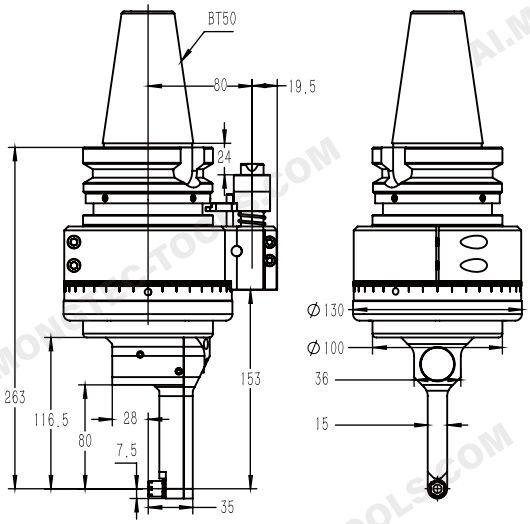

PARAMETERS

Model	BT50QDC5M
Driving Shank	BT50
More Shank	Can Be Used
Max. RPM	6000 RPM
Output Rotation	CW-CW
Ratio of Transmission	1:1
Through the Diameter	D40
Chucking Range	D1-D5
Tapping	M3-M5
Torque	5.6 Nm
WT	11.372 kg
Inventory	Stock
Custom	Customization

Specifications and dimensions are for reference only and subject to change without notice. Please confirm the latest specifications before ordering.

BT50QDC6

1. The shell is made of 40Cr, through aging treatment, precision processing, with high rigidity, high precision, long life and other characteristics. The minimum pass allowed Phi D35
2. The main drive shaft is made of special alloy material, processed by precise heat treatment process, and finally finely ground and formed to achieve high transmission stability.
3. Gear wheel bearings are imported to ensure the transmission of high torque, low noise.
4. Input and output forms are diverse and flexible, not limited to BT or ER interface, can meet all kinds of precision machining equipment, can be used for milling,drilling, tapping, grinding and other processes of processing.

Shank with

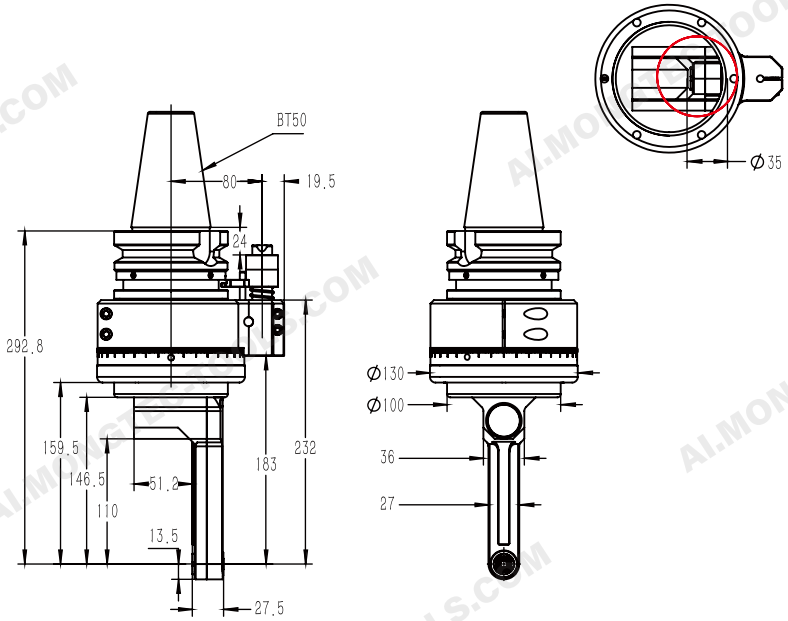

PARAMETERS

Model	BT50QDC6
Driving Shank	BT50
More Shank	Can Be Used
Max. RPM	6000 RPM
Output Rotation	CW-CW
Ratio of Transmission	1:1
Through the Diameter	D35
Chucking Range	D1-D5
Tapping	M3-M5
Torque	10.8 Nm
WT	11.648 kg
Inventory	Stock
Custom	Customization

Specifications and dimensions are for reference only and subject to change without notice. Please confirm the latest specifications before ordering.

BT50QDC7Q52

1. The shell is made of 40Cr, through aging treatment, precision machining, with high rigidity, high precision, long life and other characteristics. The minimum pass allowed Phi D50
2. The main drive shaft is made of special alloy material, processed by strict heat treatment process, and finally finely ground to achieve high transmission stability.
3. Gear wheel bearings are imported to ensure the transmission of high torque, low noise.
4. Input and output forms are diverse and flexible, not limited to BT or ER interface, can meet all kinds of precision machining equipment, can be used for milling,drilling, tapping, grinding and other processes of processing.

Shank with

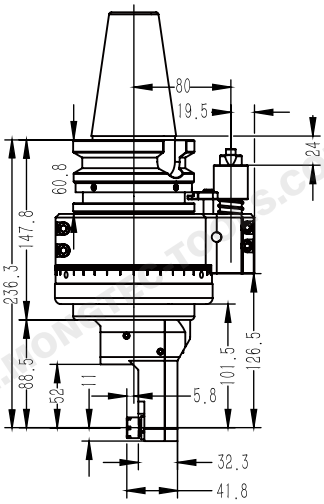

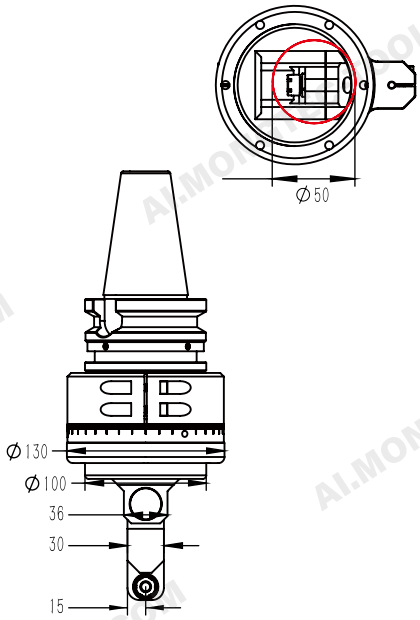

PARAMETERS

Model	BT50QDC7Q52
Driving Shank	BT50
More Shank	Can Be Used
Max. RPM	6000 RPM
Output Rotation	CW-CW
Ratio of Transmission	1:1
Through the Diameter	D50
Chucking Range	D1-D7
Tapping	Milling
Torque	10.8 Nm
WT	10.992 kg
Inventory	Stock
Custom	Customization

Specifications and dimensions are for reference only and subject to change without notice. Please confirm the latest specifications before ordering.

BT50QDC7Q120

1. The shell is made of 40Cr, through aging treatment, precision processing, with high rigidity, high precision, long life and other characteristics. The minimum pass allowed Phi D50
2. The main drive shaft is made of special alloy material, processed by precise heat treatment process, and finally finely ground and formed to achieve high transmission stability.
3. Gear wheel bearings are imported to ensure the transmission of high torque, low noise.
4. Input and output forms are diverse and flexible, not limited to BT or ER interface, can meet all kinds of precision machining equipment, can be used for milling,drilling, tapping, grinding and other processes of processing.

Shank with

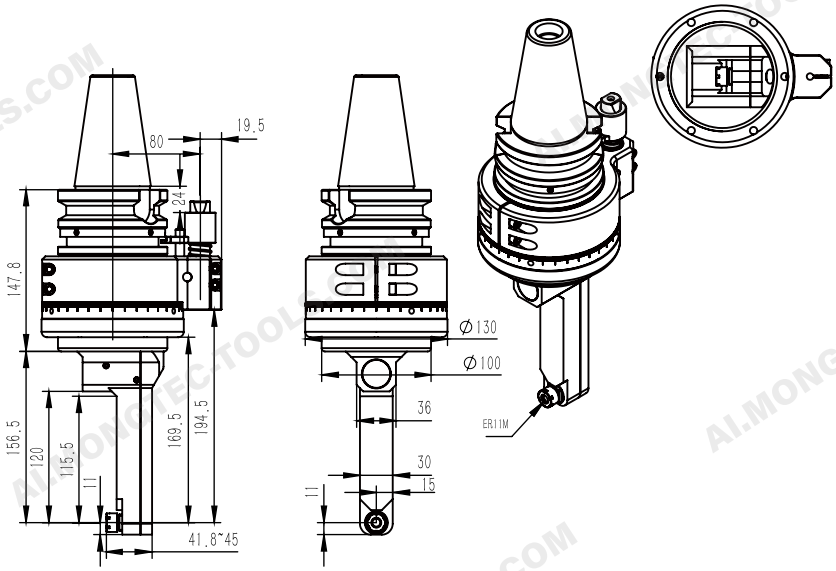

PARAMETERS

Model	BT50QDC7Q120
Driving Shank	BT50
More Shank	Can Be Used
Max. RPM	6000 RPM
Output Rotation	CW-CW
Ratio of Transmission	1:1
Through the Diameter	D50
Chucking Range	D1-D7
Tapping	Milling
Torque	16.8 Nm
WT	11.886 kg
Inventory	Stock
Custom	Customization

Specifications and dimensions are for reference only and subject to change without notice. Please confirm the latest specifications before ordering.

BT50QDC8Q160

1. The shell is made of 40Cr, through aging treatment, precision machining, with high rigidity, high precision, long life and other characteristics. The minimum pass allowed Phi D65
2. The main drive shaft is made of special alloy material, processed by strict heat treatment process, and finally finely ground to achieve high transmission stability.
3. Gear wheel bearings are imported to ensure the transmission of high torque, low noise.
4. Input and output forms are diverse and flexible, not limited to BT or ER interface,can meet all kinds of precision machining equipment, can be used for milling,drilling, tapping, grinding and other processes of processing.

Shank with

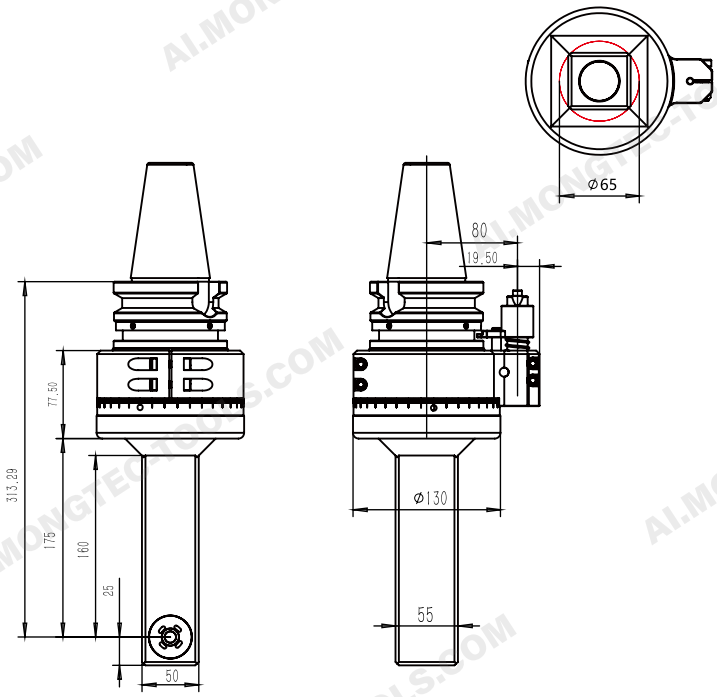

PARAMETERS

Model	BT50QDC8Q160
Driving Shank	BT50
More Shank	Can Be Used
Max. RPM	6000 RPM
Output Rotation	CW-CW
Ratio of Transmission	1:1
Through the Diameter	D65
Chucking Range	D3-D10
Tapping	Milling
Torque	8.8 Nm
WT	12.997 kg
Inventory	Stock
Custom	Customization

Specifications and dimensions are for reference only and subject to change without notice. Please confirm the latest specifications before ordering.

BT50QDC10

1. The shell is made of 40Cr, through aging treatment, precision processing, with high rigidity, high precision, long life and other characteristics. The minimum pass allowed Phi D51
2. The main drive shaft is made of special alloy material, processed by precise heat treatment process, and finally finely ground and formed to achieve high transmission stability.
3. Gear wheel bearings are imported to ensure the transmission of high torque, low noise.
4. Input and output forms are diverse and flexible, not limited to BT or ER interface,can meet all kinds of precision machining equipment, can be used for milling,drilling, tapping, grinding and other processes of processing.

Shank with

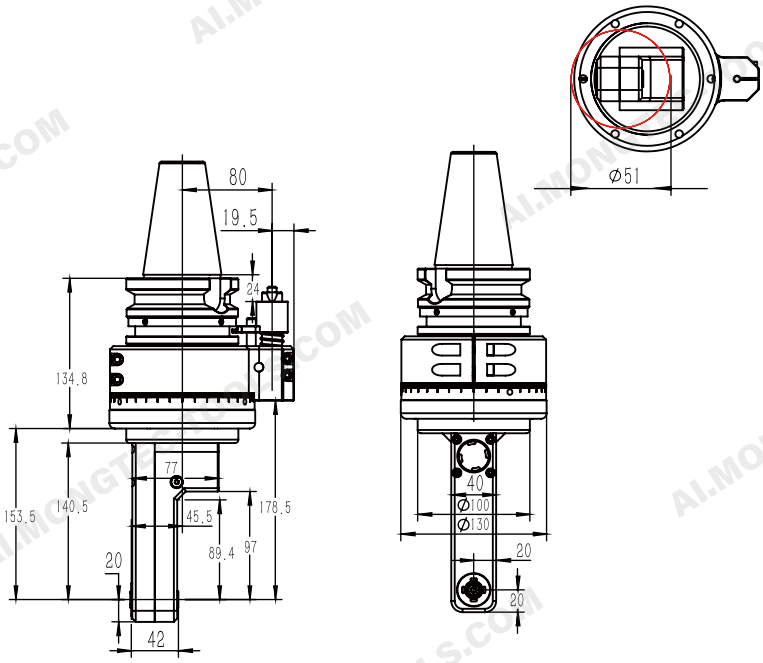

PARAMETERS

Model	BT50QDC10
Driving Shank	BT50
More Shank	Can Be Used
Max. RPM	6000 RPM
Output Rotation	CW-CW
Ratio of Transmission	1:1
Through the Diameter	D51
Chucking Range	D4-D10
Tapping	M5-M10
Torque	23. Nm
WT	12 kg
Inventory	Stock
Custom	Customization

Specifications and dimensions are for reference only and subject to change without notice. Please confirm the latest specifications before ordering.

BT50QDC13

1. The shell is made of 40Cr, through aging treatment, precision machining, with high rigidity, high precision, long life and other characteristics. The minimum pass allowed Phi D75
2. The main drive shaft is made of special alloy material, processed by strict heat treatment process, and finally finely ground to achieve high transmission stability.
3. Gear wheel bearings are imported to ensure the transmission of high torque, low noise.
4. Input and output forms are diverse and flexible, not limited to BT or ER interface,can meet all kinds of precision machining equipment, can be used for milling,drilling, tapping, grinding and other processes of processing.

Shank with

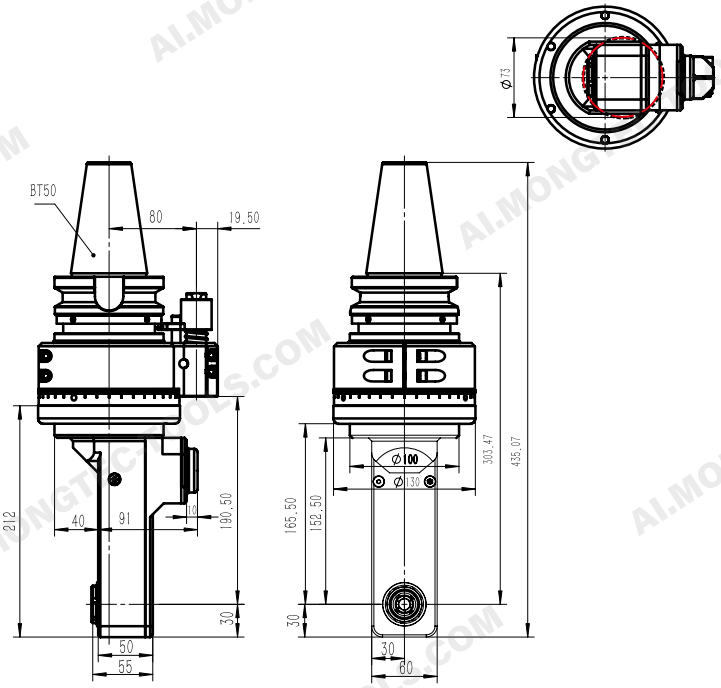

PARAMETERS

Model	BT50QDC13
Driving Shank	BT50
More Shank	Can Be Used
Max. RPM	6000 RPM
Output Rotation	CW-CW
Ratio of Transmission	1:1
Through the Diameter	D75
Chucking Range	D1-D13
Tapping	Milling
Torque	30. Nm
WT	14.5 kg
Inventory	Stock
Custom	Customization

Specifications and dimensions are for reference only and subject to change without notice. Please confirm the latest specifications before ordering.

BT50QDC16Q65

1. The shell is made of 40Cr, through aging treatment, precision processing, with high rigidity, high precision, long life and other characteristics. The minimum pass allowed Phi 80
2. The main drive shaft is made of special alloy material, processed by precise heat treatment process, and finally finely ground and formed to achieve high transmission stability.
3. Gear wheel bearings are imported to ensure the transmission of high torque, low noise.
4. Input and output forms are diverse and flexible, not limited to BT or ER interface,can meet all kinds of precision machining equipment, can be used for milling,drilling, tapping, grinding and other processes of processing.

Shank with

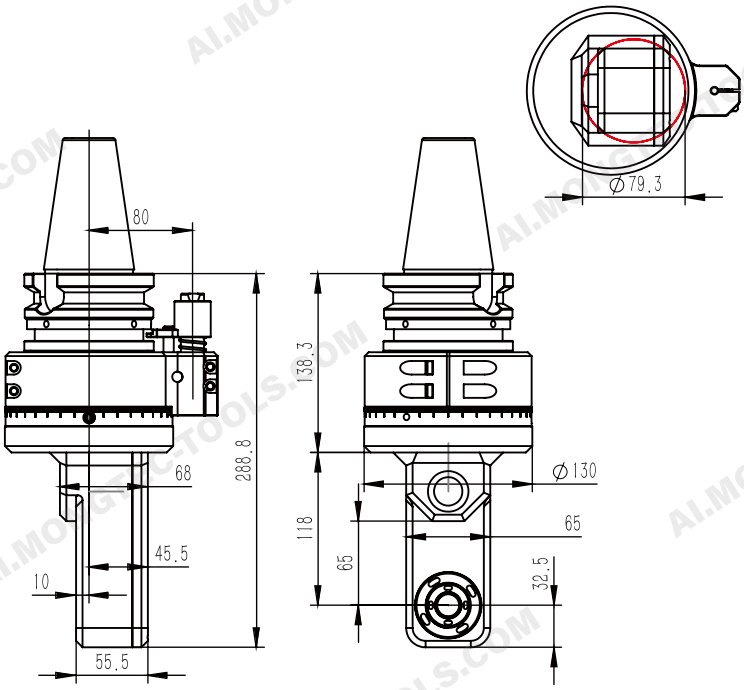

PARAMETERS

Model	BT50QDC16Q65
Driving Shank	BT50
More Shank	Can Be Used
Max. RPM	6000 RPM
Output Rotation	CW-CW
Ratio of Transmission	1:1
Through the Diameter	80
Chucking Range	D1-D16
Tapping	M6-M14
Torque	46. Nm
WT	13.2 kg
Inventory	20 Days
Custom	Customization

Specifications and dimensions are for reference only and subject to change without notice. Please confirm the latest specifications before ordering.

BT50QDC16Q99

1. The shell is made of 40Cr, through aging treatment, precision machining, with high rigidity, high precision, long life and other characteristics. The minimum pass allowed Phi D85
2. The main drive shaft is made of special alloy material, processed by strict heat treatment process, and finally finely ground to achieve high transmission stability.
3. Gear wheel bearings are imported to ensure the transmission of high torque, low noise.
4. Input and output forms are diverse and flexible, not limited to BT or ER interface, can meet all kinds of precision machining equipment, can be used for milling,drilling, tapping, grinding and other processes of processing.

Shank with

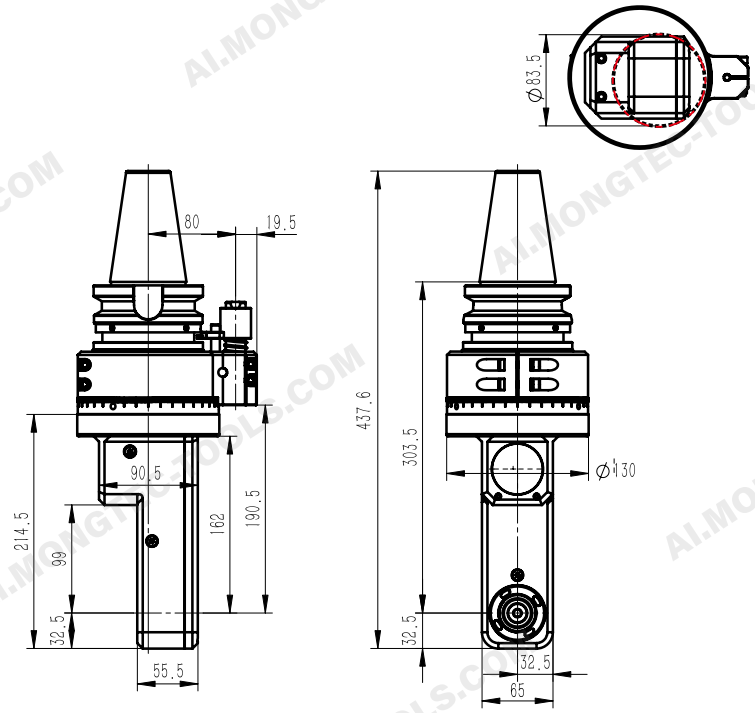

PARAMETERS

Model	BT50QDC16Q99
Driving Shank	BT50
More Shank	Can Be Used
Max. RPM	6000 RPM
Output Rotation	CW-CW
Ratio of Transmission	1:1
Through the Diameter	D85
Chucking Range	D1-D16
Tapping	M6-M14
Torque	46. Nm
WT	12.412 kg
Inventory	Stock
Custom	Customization

Specifications and dimensions are for reference only and subject to change without notice. Please confirm the latest specifications before ordering.

BT50QDC16Q145

1. The shell is made of 40Cr, through aging treatment, precision processing, with high rigidity, high precision, long life and other characteristics. The minimum pass allowed Phi D85/123
2. The main drive shaft is made of special alloy material, processed by precise heat treatment process, and finally finely ground and formed to achieve high transmission stability.
3. Gear wheel bearings are imported to ensure the transmission of high torque, low noise.
4. Input and output forms are diverse and flexible, not limited to BT or ER interface,can meet all kinds of precision machining equipment, can be used for milling,drilling, tapping, grinding and other processes of processing.

Shank with

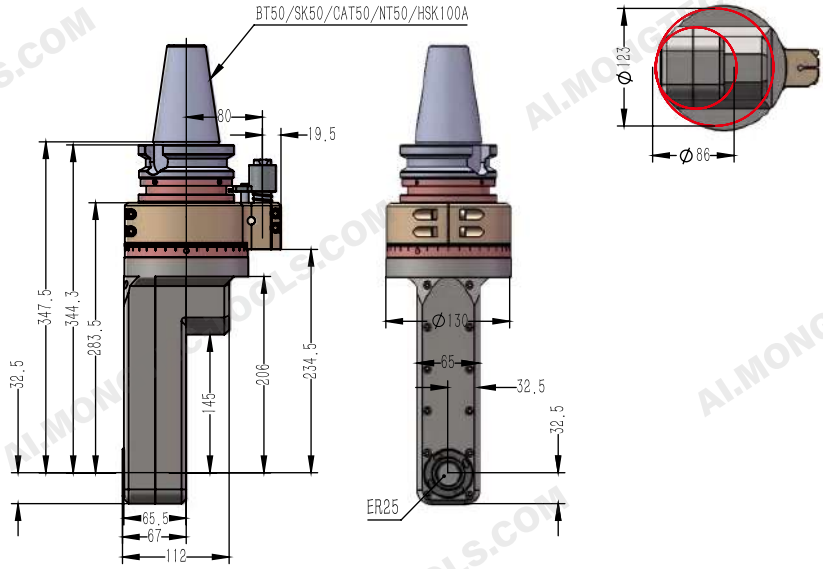

PARAMETERS

Model	BT50QDC16Q145
Driving Shank	HSK100A/BT/NT/SK/CAT50
More Shank	Can Be Used
Max. RPM	6000 RPM
Output Rotation	CW-CW
Ratio of Transmission	1:1
Through the Diameter	D85/123
Chucking Range	D1-D16
Tapping	M6-M14
Torque	46. Nm
WT	17.307 kg
Inventory	Stock
Custom	Customization

Specifications and dimensions are for reference only and subject to change without notice. Please confirm the latest specifications before ordering.

BT50QDC16Q185

1. The shell is made of 40Cr, through aging treatment, precision machining, with high rigidity, high precision, long life and other characteristics. The minimum pass allowed Phi D79/D105
2. The main drive shaft is made of special alloy material, processed by strict heat treatment process, and finally finely ground to achieve high transmission stability.
3. Gear wheel bearings are imported to ensure the transmission of high torque, low noise.
4. Input and output forms are diverse and flexible, not limited to BT or ER interface,can meet all kinds of precision machining equipment, can be used for milling,drilling, tapping, grinding and other processes of processing.

Shank with

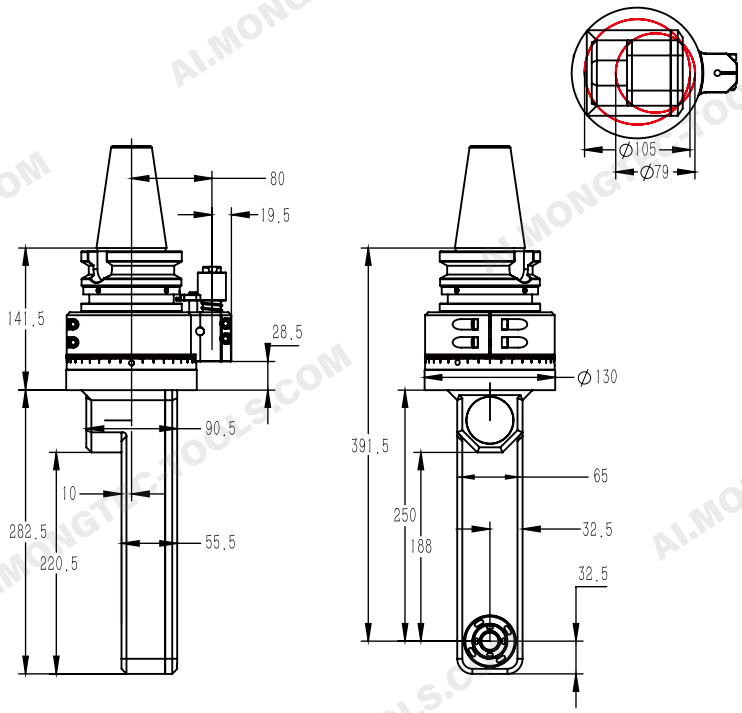

PARAMETERS

Model	BT50QDC16Q185
Driving Shank	BT/NT/CAT50/HSK100A
More Shank	Can Be Used
Max. RPM	6000 RPM
Output Rotation	CW-CW
Ratio of Transmission	1:1
Through the Diameter	D79/D105
Chucking Range	D1-D16
Tapping	M6-M14
Torque	46. Nm
WT	16.614 kg
Inventory	Stock
Custom	Customization

Specifications and dimensions are for reference only and subject to change without notice. Please confirm the latest specifications before ordering.

BT50QER11Q90

1. The shell is made of QT500Q7, through aging treatment, precision processing, with high rigidity, high precision, long life and other characteristics. The minimum pass allowed Phi D75
2. The main drive shaft is made of special alloy material, processed by precise heat treatment process, and finally finely ground and formed to achieve high transmission stability.
3. Gear wheel bearings are imported to ensure the transmission of high torque, low noise.
4. Input and output forms are diverse and flexible, not limited to BT or ER interface,can meet all kinds of precision machining equipment, can be used for milling,drilling, tapping, grinding and other processes of processing.

Shank with

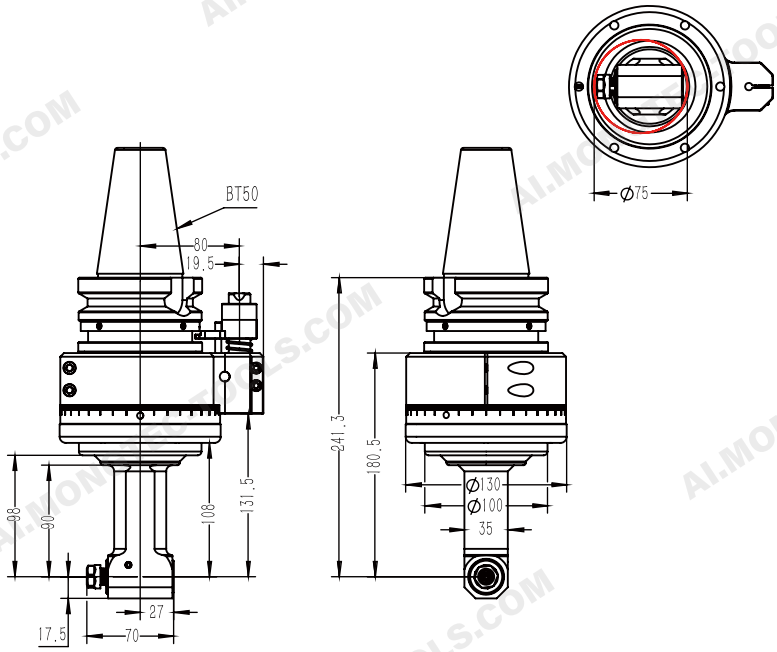

PARAMETERS

Model	BT50QER11Q90
Driving Shank	BT50
More Shank	Can Be Used
Max. RPM	8000 RPM
Output Rotation	CW-CW
Ratio of Transmission	1:1
Through the Diameter	D75
Chucking Range	D1-D7
Tapping	M5-M6
Torque	10.8Nm
WT	11.446 kg
Inventory	Stock
Custom	Customization

Specifications and dimensions are for reference only and subject to change without notice. Please confirm the latest specifications before ordering.

BT50QER11Q140

1. The shell is made of QT500Q7, through aging treatment, precision machining, with high rigidity, high precision, long life and other characteristics. The minimum pass allowed Phi D75
2. The main drive shaft is made of special alloy material, processed by strict heat treatment process, and finally finely ground to achieve high transmission stability.
3. Gear wheel bearings are imported to ensure the transmission of high torque, low noise.
4. Input and output forms are diverse and flexible, not limited to BT or ER interface,can meet all kinds of precision machining equipment, can be used for milling,drilling, tapping, grinding and other processes of processing.

Shank with

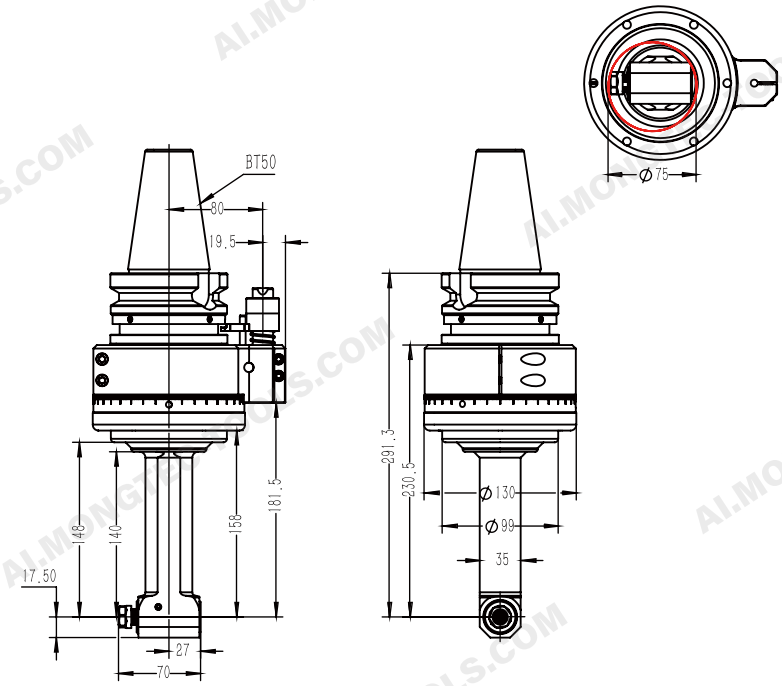

PARAMETERS

Model	BT50QER11Q140
Driving Shank	BT50
More Shank	Can Be Used
Max. RPM	8000 RPM
Output Rotation	CW-CW
Ratio of Transmission	1:1
Through the Diameter	D75
Chucking Range	D1-D7
Tapping	M5-M6
Torque	10.8Nm
WT	11.715 kg
Inventory	Stock
Custom	Customization

Specifications and dimensions are for reference only and subject to change without notice. Please confirm the latest specifications before ordering.

BT50QER11Q190

1. The shell is made of QT500Q7, through aging treatment, precision processing, with high rigidity, high precision, long life and other characteristics. The minimum pass allowed Phi D75
2. The main drive shaft is made of special alloy material, processed by precise heat treatment process, and finally finely ground and formed to achieve high transmission stability.
3. Gear wheel bearings are imported to ensure the transmission of high torque, low noise.
4. Input and output forms are diverse and flexible, not limited to BT or ER interface,can meet all kinds of precision machining equipment, can be used for milling,drilling, tapping, grinding and other processes of processing.

Shank with

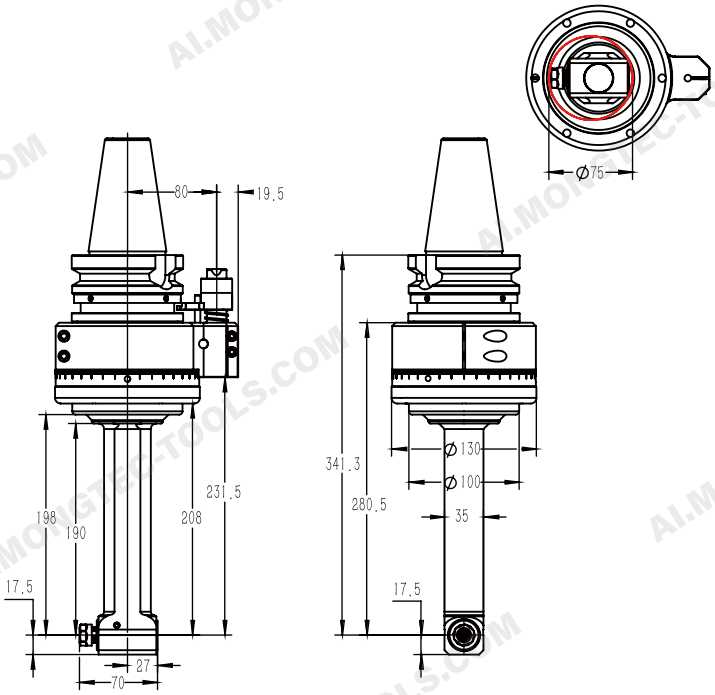

PARAMETERS

Model	BT50QER11Q190
Driving Shank	BT50
More Shank	Can Be Used
Max. RPM	8000 RPM
Output Rotation	CW-CW
Ratio of Transmission	1:1
Through the Diameter	D75
Chucking Range	D1-D7
Tapping	M5-M6
Torque	10.8Nm
WT	12.190 kg
Inventory	Stock
Custom	Customization

Specifications and dimensions are for reference only and subject to change without notice. Please confirm the latest specifications before ordering.

BT50QER16Q66

1. The shell is made of QT500Q7, through aging treatment, precision machining, with high rigidity, high precision, long life and other characteristics. The minimum pass allowed Phi D100
2. The main drive shaft is made of special alloy material, processed by strict heat treatment process, and finally finely ground to achieve high transmission stability.
3. Gear wheel bearings are imported to ensure the transmission of high torque, low noise.
4. Input and output forms are diverse and flexible, not limited to BT or ER interface,can meet all kinds of precision machining equipment, can be used for milling,drilling, tapping, grinding and other processes of processing.

Shank with

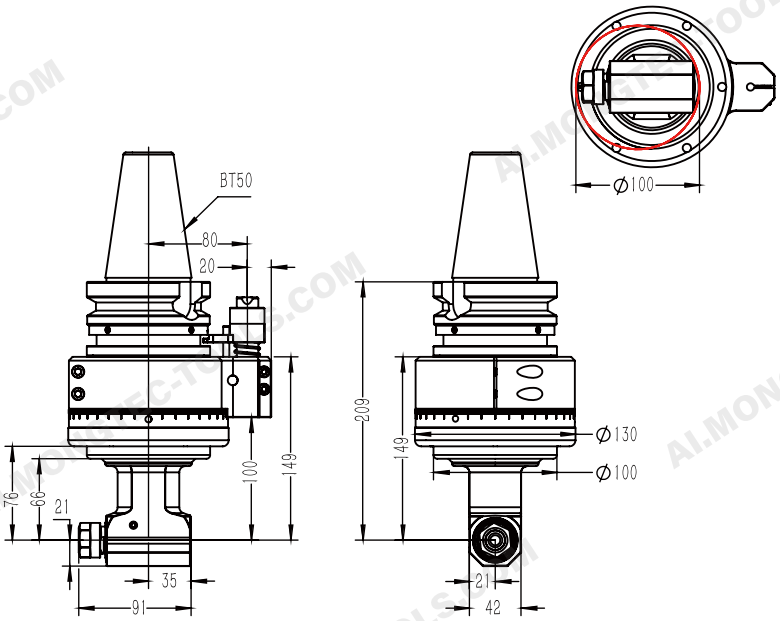

PARAMETERS

Model	BT50QER16Q66
Driving Shank	BT50
More Shank	Can Be Used
Max. RPM	8000 RPM
Output Rotation	CW-CW
Ratio of Transmission	1:1
Through the Diameter	D100
Chucking Range	D1-D10
Tapping	M5-M8
Torque	18.Nm
WT	11.447 kg
Inventory	Stock
Custom	Customization

Specifications and dimensions are for reference only and subject to change without notice. Please confirm the latest specifications before ordering.

BT50QER16Q110

1. The shell is made of QT500Q7, through aging treatment, precision processing, with high rigidity, high precision, long life and other characteristics. The minimum pass allowed Phi D100
2. The main drive shaft is made of special alloy material, processed by precise heat treatment process, and finally finely ground and formed to achieve high transmission stability.
3. Gear wheel bearings are imported to ensure the transmission of high torque, low noise.
4. Input and output forms are diverse and flexible, not limited to BT or ER interface, can meet all kinds of precision machining equipment, can be used for milling,drilling, tapping, grinding and other processes of processing.

Shank with

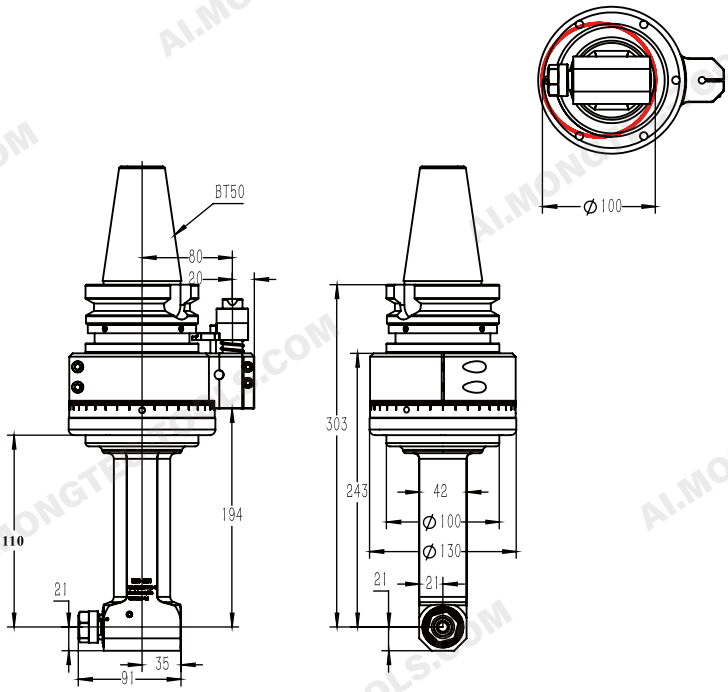

PARAMETERS

Model	BT50QER16Q110
Driving Shank	BT50
More Shank	Can Be Used
Max. RPM	8000 RPM
Output Rotation	CW-CW
Ratio of Transmission	1:1
Through the Diameter	D100
Chucking Range	D1-D10
Tapping	M5-M8
Torque	18.Nm
WT	11.79 kg
Inventory	Stock
Custom	Customization

Specifications and dimensions are for reference only and subject to change without notice. Please confirm the latest specifications before ordering.

BT50QER16Q160

1. The shell is made of QT500Q7, through aging treatment, precision machining, with high rigidity, high precision, long life and other characteristics. The minimum pass allowed Phi D100
2. The main drive shaft is made of special alloy material, processed by strict heattreatment process, and finally finely ground to achieve high transmission stability.
3. Gear wheel bearings are imported to ensure the transmission of high torque, lownoise.
4. Input and output forms are diverse and flexible, not limited to BT or ER interface,can meet all kinds of precision machining equipment, can be used for milling,drilling, tapping, grinding and other processes of processing.

Shank with

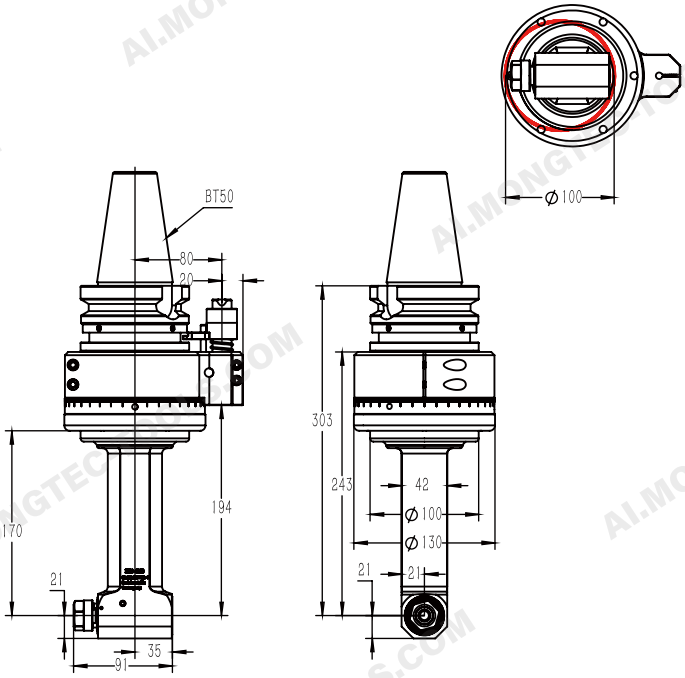

PARAMETERS

Model	BT50QER16Q160
Driving Shank	BT50
More Shank	Can Be Used
Max. RPM	8000 RPM
Output Rotation	CW-CW
Ratio of Transmission	1:1
Through the Diameter	D100
Chucking Range	D1-D10
Tapping	M5-M8
Torque	18.Nm
WT	12.22 kg
Inventory	Stock
Custom	Customization

Specifications and dimensions are for reference only and subject to change without notice. Please confirm the latest specifications before ordering.

BT50QER16Q210

1. The shell is made of QT500Q7, through aging treatment, precision processing, with high rigidity, high precision, long life and other characteristics. The minimum pass allowed Phi D100
2. The main drive shaft is made of special alloy material, processed by precise heat treatment process, and finally finely ground and formed to achieve high transmission stability.
3. Gear wheel bearings are imported to ensure the transmission of high torque, low noise.
4. Input and output forms are diverse and flexible, not limited to BT or ER interface,can meet all kinds of precision machining equipment, can be used for milling,drilling, tapping, grinding and other processes of processing.

Shank with

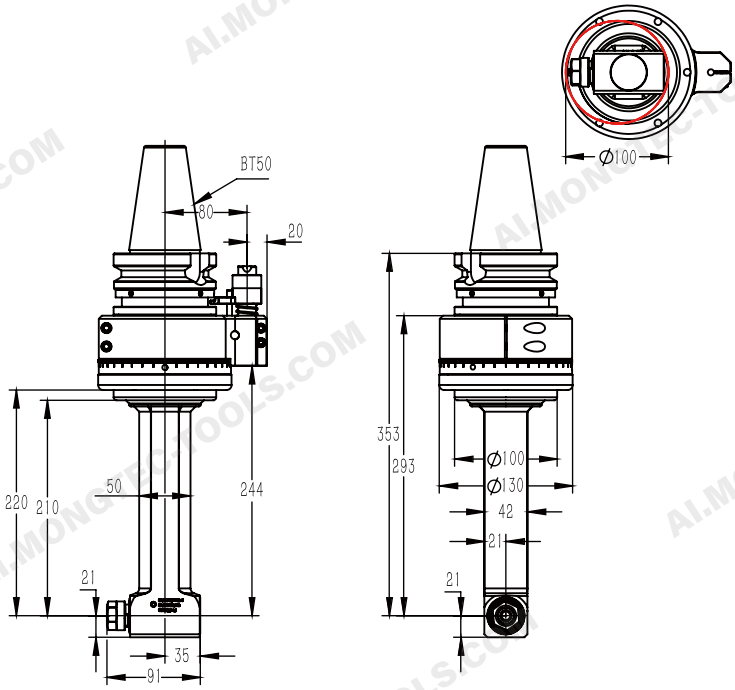

PARAMETERS

Model	BT50QER16Q210
Driving Shank	BT50
More Shank	Can Be Used
Max. RPM	8000 RPM
Output Rotation	CW-CW
Ratio of Transmission	1:1
Through the Diameter	D100
Chucking Range	D1-D10
Tapping	M5-M8
Torque	18.Nm
WT	12.870 kg
Inventory	Stock
Custom	Customization

Specifications and dimensions are for reference only and subject to change without notice. Please confirm the latest specifications before ordering.

BT50QER16Q260

1. The shell is made of QT500Q7, through aging treatment, precision machining, with high rigidity, high precision, long life and other characteristics. The minimum pass allowed Phi D100
2. The main drive shaft is made of special alloy material, processed by strict heat treatment process, and finally finely ground to achieve high transmission stability.
3. Gear wheel bearings are imported to ensure the transmission of high torque, low noise.
4. Input and output forms are diverse and flexible, not limited to BT or ER interface,can meet all kinds of precision machining equipment, can be used for milling,drilling, tapping, grinding and other processes of processing.

Shank with

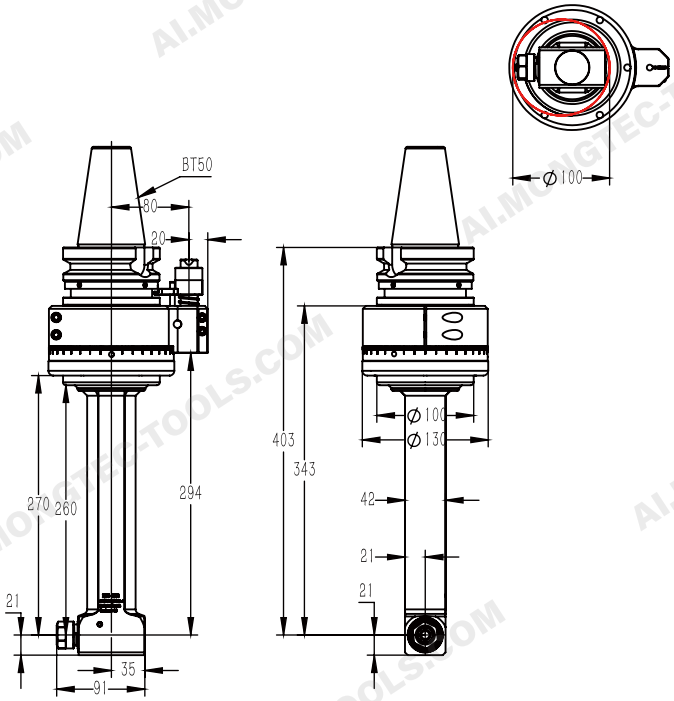

PARAMETERS

Model	BT50QER16Q260
Driving Shank	BT50
More Shank	Can Be Used
Max. RPM	8000 RPM
Output Rotation	CW-CW
Ratio of Transmission	1:1
Through the Diameter	D100
Chucking Range	D1-D10
Tapping	M5-M8
Torque	18.Nm
WT	13.477 kg
Inventory	Stock
Custom	Customization

Specifications and dimensions are for reference only and subject to change without notice. Please confirm the latest specifications before ordering.

BT50QER16Q2X

1. The shell is made of QT500Q7, through aging treatment, precision processing, with high rigidity, high precision, long life and other characteristics. The minimum pass allowed Phi D118
2. The main drive shaft is made of special alloy material, processed by precise heat treatment process, and finally finely ground and formed to achieve high transmission stability.
3. Gear wheel bearings are imported to ensure the transmission of high torque, low noise.
4. Input and output forms are diverse and flexible, not limited to BT or ER interface,can meet all kinds of precision machining equipment, can be used for milling,drilling, tapping, grinding and other processes of processing.

Shank with

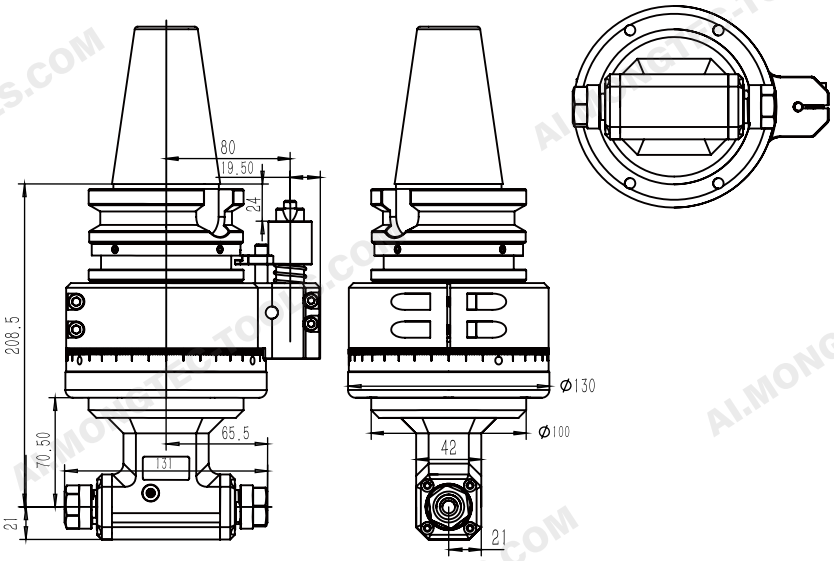

PARAMETERS

Model	BT50QER16Q2X
Driving Shank	BT50
More Shank	Can Be Used
Max. RPM	8000 RPM
Output Rotation	CW-CW
Ratio of Transmission	1:1
Through the Diameter	D118
Chucking Range	D1-D10
Tapping	M5-M8
Torque	19.Nm
WT	10 kg
Inventory	Stock
Custom	Customization

Specifications and dimensions are for reference only and subject to change without notice. Please confirm the latest specifications before ordering.

BT50QER25Q66

1. The shell is made of QT500Q7, through aging treatment, precision machining, with high rigidity, high precision, long life and other characteristics. The minimum pass allowed Phi D130
2. The main drive shaft is made of special alloy material, processed by strict heat treatment process, and finally finely ground to achieve high transmission stability.
3. Gear wheel bearings are imported to ensure the transmission of high torque, low noise.
4. Input and output forms are diverse and flexible, not limited to BT or ER interface, can meet all kinds of precision machining equipment, can be used for milling,drilling, tapping, grinding and other processes of processing.

Shank with

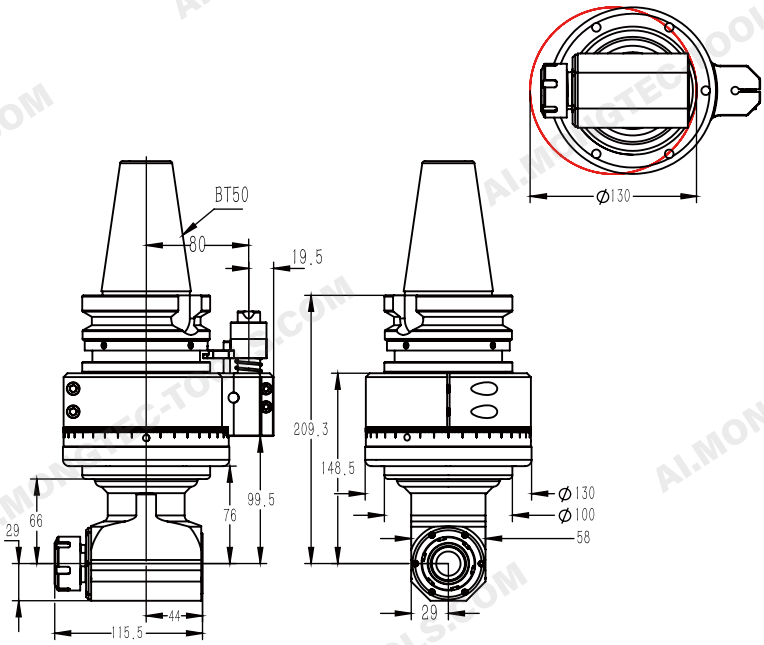

PARAMETERS

Model	BT50QER25Q66
Driving Shank	BT50
More Shank	Can Be Used
Max. RPM	6800 RPM
Output Rotation	CW-CW
Ratio of Transmission	1:1
Through the Diameter	D130
Chucking Range	D1-D16
Tapping	M6-M14
Torque	46.Nm
WT	12.523 kg
Inventory	Stock
Custom	Customization

Specifications and dimensions are for reference only and subject to change without notice. Please confirm the latest specifications before ordering.

BT50QER25Q110

1. The shell is made of QT500Q7, through aging treatment, precision processing, with high rigidity, high precision, long life and other characteristics. The minimum pass allowed Phi D130
2. The main drive shaft is made of special alloy material, processed by precise heat treatment process, and finally finely ground and formed to achieve high transmission stability.
3. Gear wheel bearings are imported to ensure the transmission of high torque, low noise.
4. Input and output forms are diverse and flexible, not limited to BT or ER interface, can meet all kinds of precision machining equipment, can be used for milling,drilling, tapping, grinding and other processes of processing.

Shank with

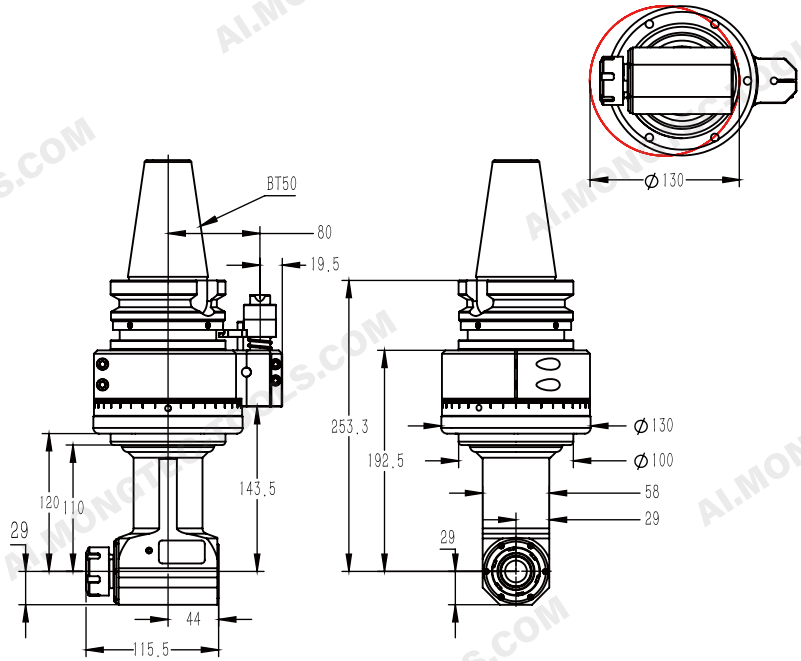

PARAMETERS

Model	BT50QER25Q110
Driving Shank	BT50
More Shank	Can Be Used
Max. RPM	6800 RPM
Output Rotation	CW-CW
Ratio of Transmission	1:1
Through the Diameter	D130
Chucking Range	D1-D16
Tapping	M6-M14
Torque	46.Nm
WT	13.081 kg
Inventory	Stock
Custom	Customization

Specifications and dimensions are for reference only and subject to change without notice. Please confirm the latest specifications before ordering.

BT50QER25Q160

I. The shell is made of QT500Q7, through aging treatment, precision machining, with high rigidty, high precision, long l,je and other characteristics. The minimum pass allowed Phi DI 30
2. The main drive shaft is made of special alloy material, processed by strict heat treatment process, and.finally.finely ground to achieve high transmission stability
3. Gear wheel bearings are imported to ensure the transmission of high torque, low noise.
4. Input and output farms are diverse and.flexible, not limited to BT or ER interface,can meet all kinds of precision machining equipment, can be used for milling,drilling, tapping, grinding and other processes of processing

Shank with

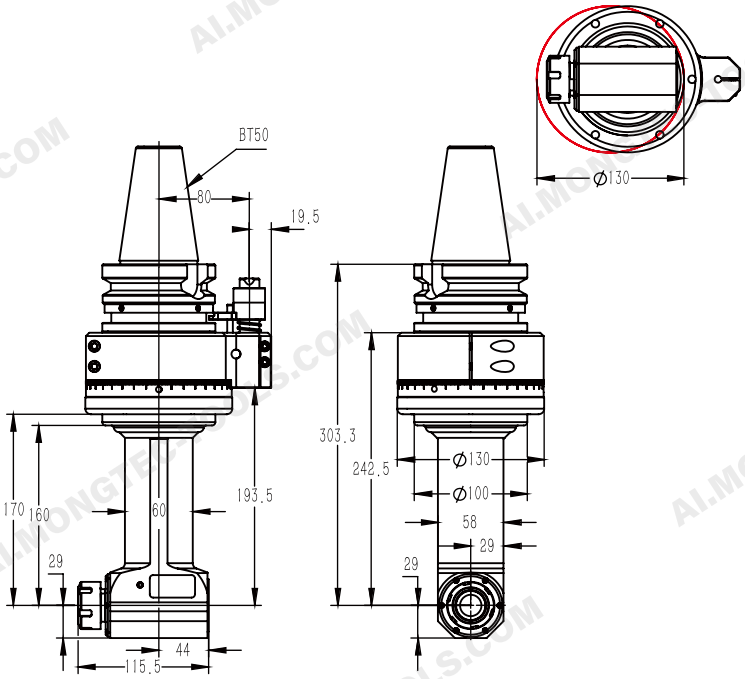

PARAMETERS

Model	BT50QER25Q160
Driving Shank	BT50
More Shank	Can Be Used
Max. RPM	6800 RPM
Output Rotation	CW-CW
Ratio of Transmission	1 : 1
Through the Diameter	D130
Chucking Range	D1-D16
Tapping	M6-M14
Torque	46.Nm
WT	13.706 kg
Inventory	Stock
Custom	Customization

Specifications and dimensions are for reference only and subject to change without notice. Please confirm the latest specifications before ordering.

BT50QER25Q210

1. The shell is made of QT500Q7, through aging treatment, precision processing, with high rigidity, high precision, long life and other characteristics. The minimum pass allowed Phi D130
2. The main drive shaft is made of special alloy material, processed by precise heat treatment process, and finally finely ground and formed to achieve high transmission stability.
3. Gear wheel bearings are imported to ensure the transmission of high torque, low noise.
4. Input and output forms are diverse and flexible, not limited to BT or ER interface. can meet all kinds of precision machining equipment, can be used for milling, drilling, tapping, grinding and other processes of processing.

Shank with

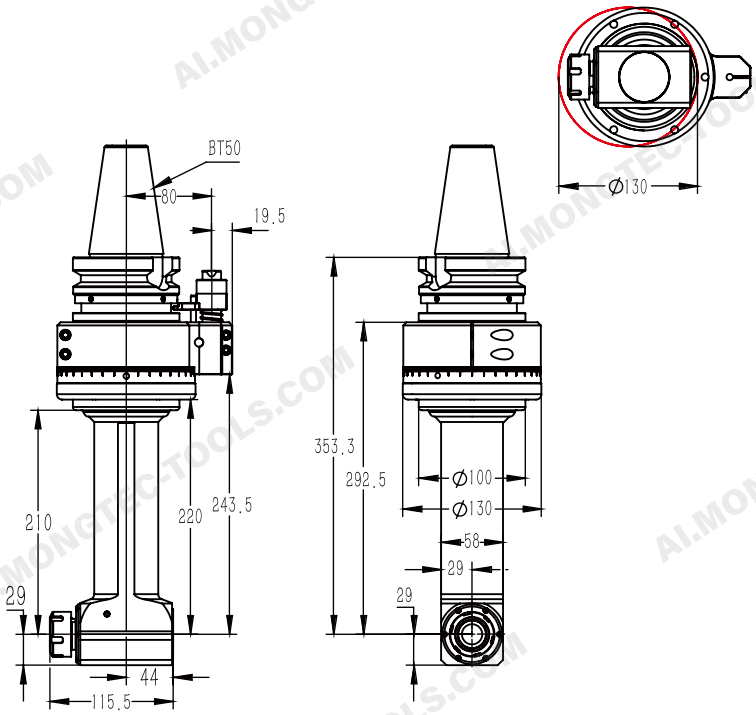

PARAMETERS

Model	BT150QER25Q210
Driving Shank	BT50
More Shank	Can Be Used
Max. RPM	6800 RPM
Output Rotation	CW–CW
Ratio of Transmission	1:1
Through the Diameter	D130
Chucking Range	D1–D16
Tapping	M6–M14
Torque	46.Nm
WT	14.932 kg
Inventory	Stock
Custom	Customization

Specifications and dimensions are for reference only and subject to change without notice. Please confirm the latest specifications before ordering.

BT50QER25Q250

1. The shell is made of OT500Q7, through aging treatment, precision machining, with high rigidity, high precision, long life and other characteristics. The minimum pass allowed Phi D130
2. The main drive shaft is made of special alloy material, processed by strict heat ent process, and finally finely ground to achieve high transmission
3. Gear wheel bearings are imported to ensure the transmission of high torque, low noise.
4. Input and output forms are diverse and flexible, not limited to BT or El all kinds of precision machining equipment, can be used for drilling, tapping, grinding and other processes of proce.

Shank with

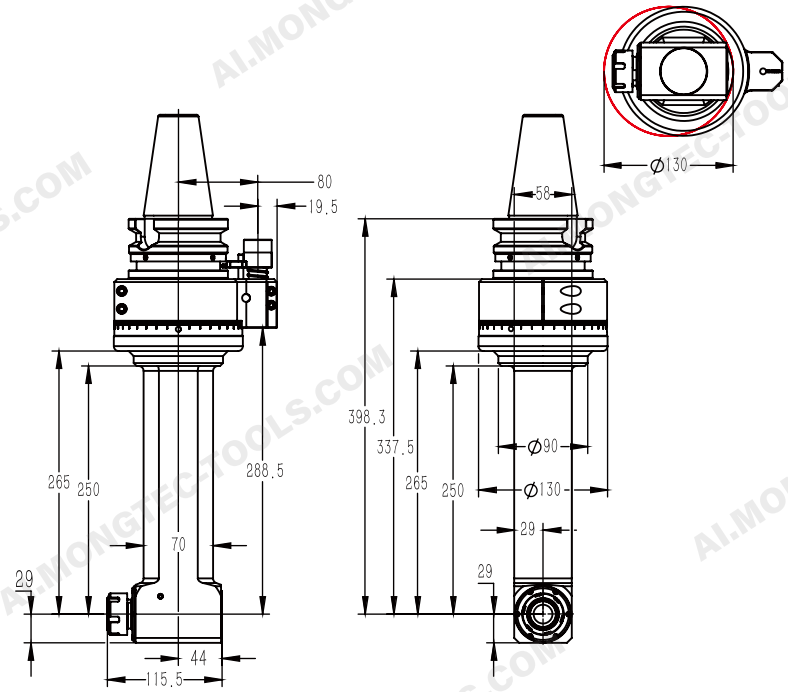

PARAMETERS

Model	BT50QER25Q250
Driving Shank	BT50
More Shank	Can Be Used
Max. RPM	8000 RPM
Output Rotation	CW–CW
Ratio of Transmission	1:1
Through the Diameter	D130
Chucking Range	D1–D13
Tapping	M6–M14
Torque	46.Nm
WT	16.403 kg
Inventory	Stock
Custom	Customization

Specifications and dimensions are for reference only and subject to change without notice. Please confirm the latest specifications before ordering.

BT50QER25Q300

1. The shell is made of QT500Q7, through aging treatment, precision processing, with high rigidity, high precision, long life and other characteristics. The minimum pass allowed Phi D130
2. The main drive shaft is made of special alloy material, processed by precise heat treatment process, and finally finely ground and formed to achieve high transmission stability.
3. Gear wheel bearings are imported to ensure the transmission of high torque, low noise.
4. Input and output forms are diverse and flexible, not limited to BT or ER interface, can meet all kinds of precision machining equipment, can be used for milling, drilling, tapping, grinding and other processes of processing.

Shank with

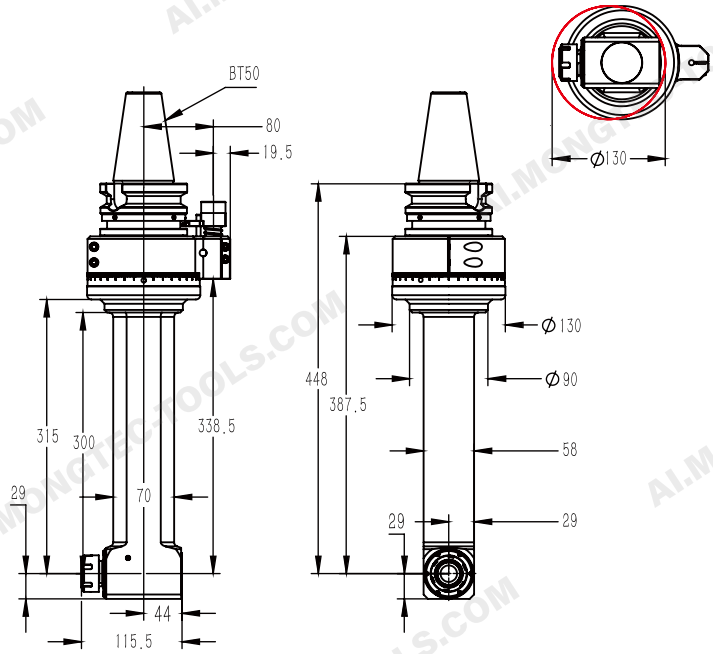

PARAMETERS

Model	BT50QER25Q300
Driving Shank	BT50
More Shank	Can Be Used
Max. RPM	6800 RPM
Output Rotation	CW–CW
Ratio of Transmission	1:1
Through the Diameter	D130
Chucking Range	D1–D16
Tapping	M6–M14
Torque	46.Nm
WT	17.454 kg
Inventory	Stock
Custom	Customization

Specifications and dimensions are for reference only and subject to change without notice. Please confirm the latest specifications before ordering.

BT50QER25Q2X

1. The shell is made of QT500Q7, through aging treatment, precision machining, with high rigidity, high precision, long life and other characteristics. The minimum pass allowed Phi D140
2. The main drive shaft is made of special alloy material, processed by strict heat treatment process, and finally finely ground to achieve high transmission stability.
3. Gear wheel bearings are imported to ensure the transmission of high torque, low noise.
4. Input and output forms are diverse and flexible, not limited to BT or ER interface, can meet all kinds of precision machining equipment, can be used for milling, drilling, tapping, grinding and other processes of processing.

Shank with

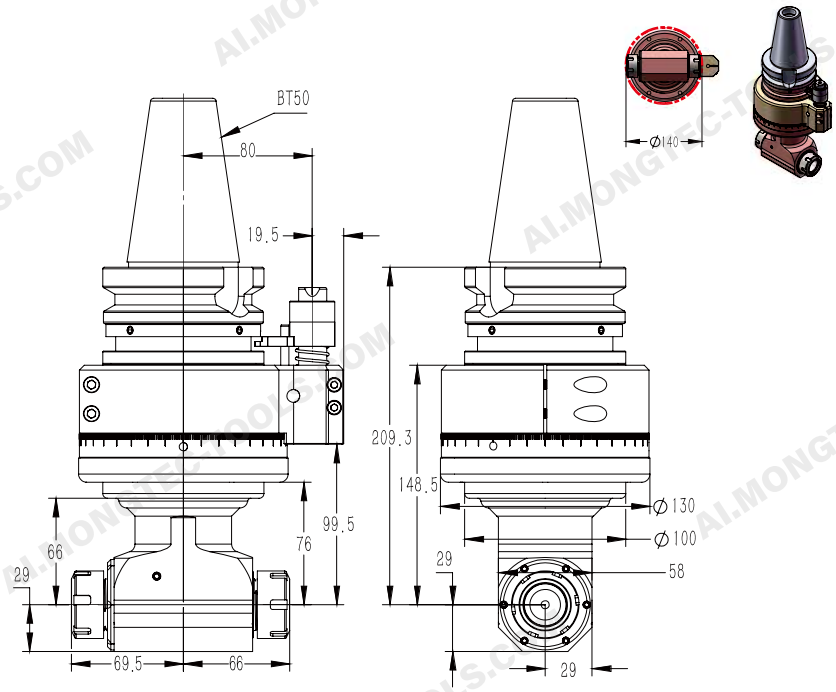

PARAMETERS

Model	BT50QER25Q2X
Driving Shank	BT50
More Shank	Can Be Used
Max. RPM	6800 RPM
Output Rotation	CW–CW
Ratio of Transmission	1:1
Through the Diameter	D140
Chucking Range	D1–D16
Tapping	M6–M14
Torque	46.Nm
WT	12.579 kg
Inventory	Stock
Custom	Customization

Specifications and dimensions are for reference only and subject to change without notice. Please confirm the latest specifications before ordering.

BT25Q2XQ110

1. The shell is made of OT500Q7, through aging treatment, precision processing, with high rigidity, high precision, long life and other characteristics. The minimum pass allowed Phi D140
2. The main drive shaft is made of special alloy material, processed by precise heat treatment process, and finally finely ground and formed to achieve high transmission stability.
3. Gear wheel bearings are imported to ensure the transmission of high torque, low noise.
4. Input and output forms are diverse and flexible, not limited to BT or ER interface, can meet all kinds of precision machining equipment, can be used for milling, drilling, tapping, grinding and other processes of processing.

Shank with

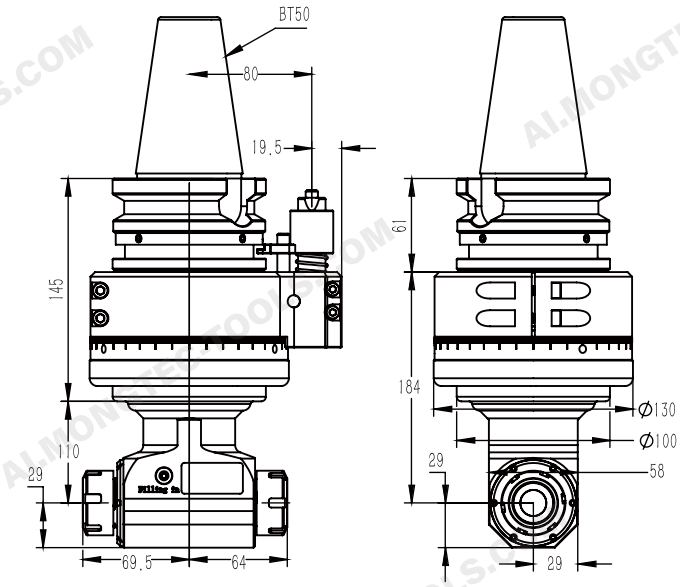

PARAMETERS

Model	BT50QER25Q2XQ110
Driving Shank	BT50
More Shank	Can Be Used
Max. RPM	6800 RPM
Output Rotation	CW–CW
Ratio of Transmission	1:1
Through the Diameter	D140
Chucking Range	D1–D16
Tapping	M6–M14
Torque	46.Nm
WT	12.109 kg
Inventory	Stock
Custom	Customization

Specifications and dimensions are for reference only and subject to change without notice. Please confirm the latest specifications before ordering.

BT50QER32Q80

1. The shell is made of QT500Q7, through aging treatment, precision machining, with high rigidity, high precision, long life and other characteristics. The minimum pass allowed Phi D155
2. The main drive shaft is made of special alloy material, processed by strict heat treatment process, and finally finely ground to achieve high transmission stability.
3. Gear wheel bearings are imported to ensure the transmission of high torque, low noise.
4. Input and output forms are diverse and flexible, not limited to BT or ER interface, can meet all kinds of precision machining equipment, can be used for milling, drilling, tapping, grinding and other processes of processing.

Shank with

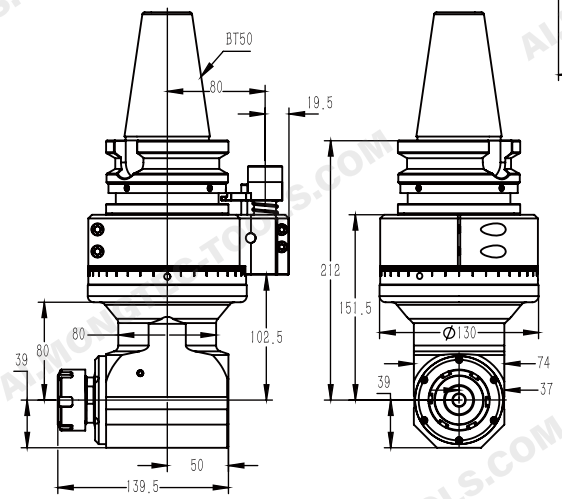

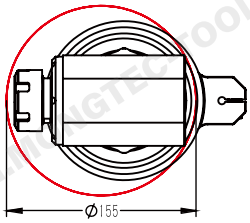

PARAMETERS

Model	BT50QER32Q80
Driving Shank	BT50
More Shank	Can Be Used
Max. RPM	5000 RPM
Output Rotation	CW–CW
Ratio of Transmission	1:1
Through the Diameter	D155
Chucking Range	D1–D20
Tapping	M6–M16
Torque	65.Nm
WT	12.670 kg
Inventory	Stock
Custom	Customization

Specifications and dimensions are for reference only and subject to change without notice. Please confirm the latest specifications before ordering.

BT50QER32Q125

1. The shell is made of QT500Q7, through aging treatment, precision processing, with high rigidity, high precision, long life and other characteristics. The minimum pass allowed Phi D155
2. The main drive shaft is made of special alloy material, processed by precise heat treatment process, and finally finely ground and formed to achieve high transmission stability.
3. Gear wheel bearings are imported to ensure the transmission of high torque, low noise.
4. Input and output forms are diverse and flexible, not limited to BT or ER interface, can meet all kinds of precision machining equipment, can be used for milling, drilling, tapping, grinding and other processes of processing.

Shank with

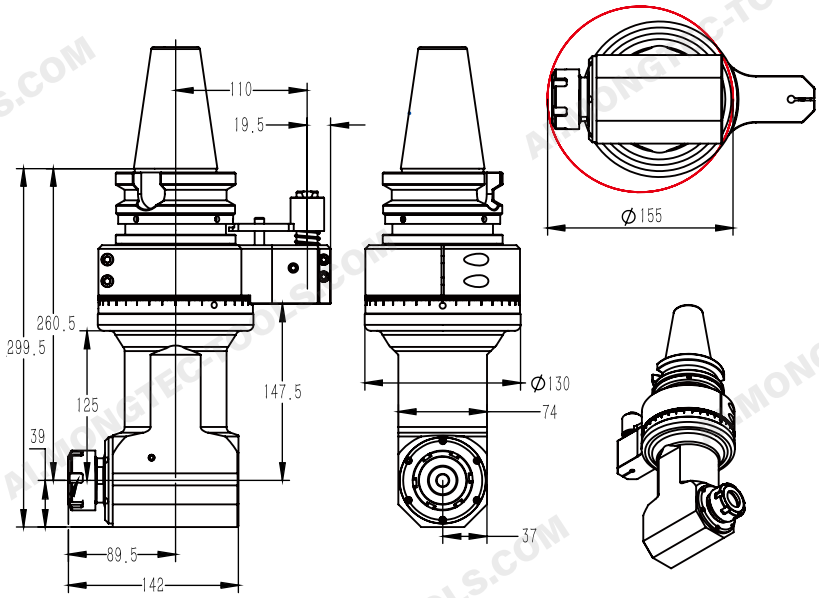

PARAMETERS

Model	BT50QER32Q125
Driving Shank	BT50
More Shank	Can Be Used
Max. RPM	5000 RPM
Output Rotation	CW–CW
Ratio of Transmission	1:1
Through the Diameter	D155
Chucking Range	D1–D10
Tapping	M1–M20
Torque	65.Nm
WT	12.397 kg
Inventory	Stock
Custom	Customization

Specifications and dimensions are for reference only and subject to change without notice. Please confirm the latest specifications before ordering.

BT50QER32Q125
FLANGE LINK

1. The shell is made of QT500Q7, through aging treatment, precision machining, with high rigidity, high precision, long life and other characteristics. The minimum pass allowed Phi D155
2. The main drive shaft is made of special alloy material, processed by strict heat treatment process, and finally finely ground to achieve high transmission stability.
3. Gear wheel bearings are imported to ensure the transmission of high torque, low noise.
4. Input and output forms are diverse and flexible, not limited to BT or ER interface, can meet all kinds of precision machining equipment, can be used for milling, A drilling, tapping, grinding and other processes of processing.

Shank with

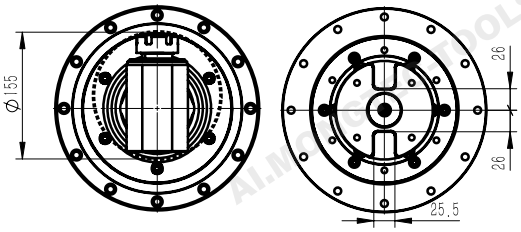

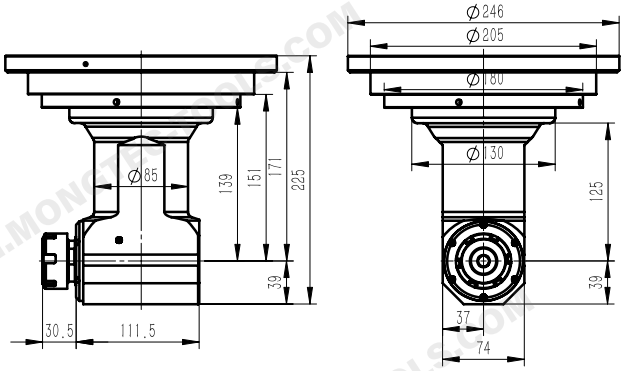

PARAMETERS

Model	BT50QER32Q125 FLANGE LINK
Driving Shank	BT50
More Shank	Can Be Used
Max. RPM	5000 RPM
Output Rotation	CW–CW
Ratio of Transmission	1:1
Through the Diameter	D155
Chucking Range	D1–D20
Tapping	M6–M16
Torque	65.Nm
WT	12.974 kg
Inventory	
Custom	Customization

Specifications and dimensions are for reference only and subject to change without notice. Please confirm the latest specifications before ordering.

BT50QER32Q170

1. The shell is made of QT500Q7, through aging treatment, precision processing, with high rigidity, higk precision, long life and other characteristics. The minimum pass allowed Phi D155
2. The main drive shaft is made of special alloy material, processed by precise heat treatment process, and finally finely ground and formed to achieve high transmission stability.
3. Gear wheel bearings are imported to ensure the transmission of high torque, low noise.
4. Input and output forms are diverse and flexible, not limited to BT or ER interface, can meet all kinds of precision machining equipment, can be used for milling, drilling, tapping, grinding and other processes of processing.

Shank with

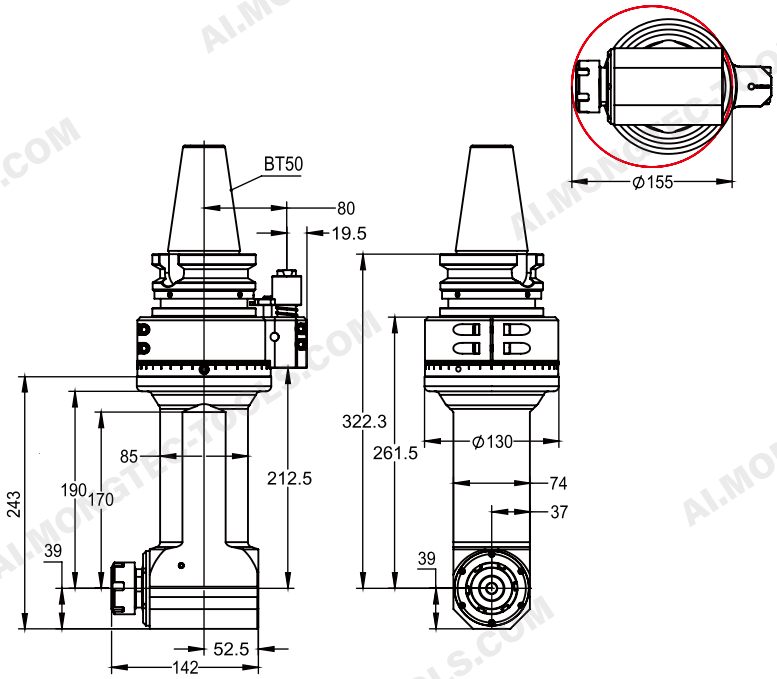

PARAMETERS

Model	BT50QER32Q170
Driving Shank	BT50
More Shank	Can Be Used
Max. RPM	5000 RPM
Output Rotation	CW–CW
Ratio of Transmission	1:1
Through the Diameter	D155
Chucking Range	D1–D20
Tapping	M6–M16
Torque	65.Nm
WT	14.5 kg
Inventory	Stock
Custom	Customization

Specifications and dimensions are for reference only and subject to change without notice. Please confirm the latest specifications before ordering.

BT50QER32Q190

1. The shell is made of QT500Q7, through aging treatment, precision machining, with high rigidity, high precision, long life and other characteristics. The minimum pass allowed Phi D178
2. The main drive shaft is made of special alloy material, processed by strict heat treatment process, and finally finely ground to achieve high transmission stability.
3. Gear wheel bearings are imported to ensure the transmission of high torque, low noise.
4. Input and output forms are diverse and flexible, not limited to BT or ER interface, can meet all kinds of precision machining equipment, can be used for milling. drilling, tapping, grinding and other processes of processing.

Shank with

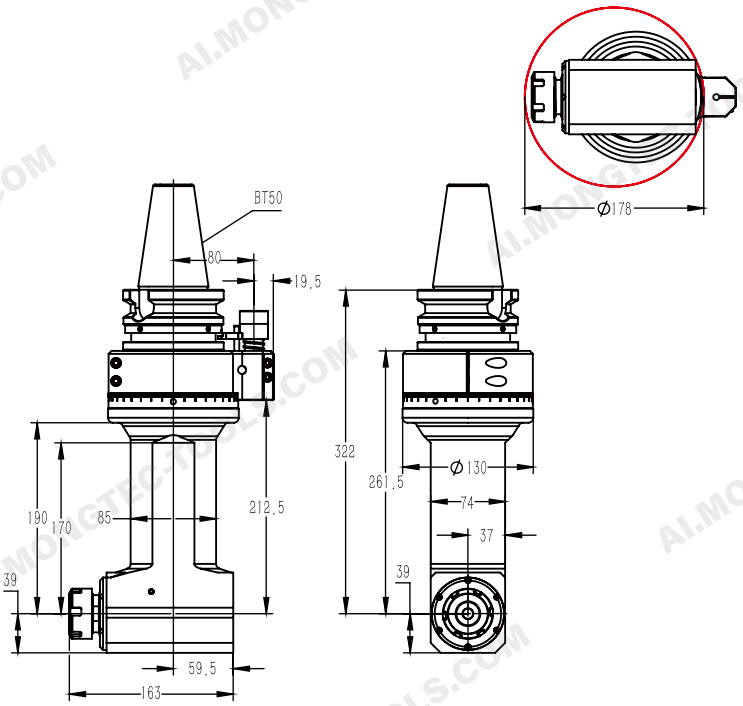

PARAMETERS

Model	BT50QER32Q190
Driving Shank	BT50
More Shank	Can Be Used
Max. RPM	5000 RPM
Output Rotation	CW–CW
Ratio of Transmission	1:1
Through the Diameter	D178
Chucking Range	D1–D20
Tapping	M6–M16
Torque	65.Nm
WT	16.890 kg
Inventory	Stock
Custom	Customization

Specifications and dimensions are for reference only and subject to change without notice. Please confirm the latest specifications before ordering.

BT50QER32Q190

FLANGE LINL

1. The shell is made of QT500Q7, through aging treatment, precision processing, with high rigidity, high precision, long life and other characteristics. The minimum pass allowed Phi DI75
2. The main drive shaft is made of special alloy material, processed by precise heat treatment process, and finally finely ground and formed to achieve high transmission stability.
3. Gear wheel bearings are imported to ensure the transmission of high torque, low noise.
4. Input and output forms are diverse and flexible, not limited to BT or ER interface, can meet all kinds of precision machining equipment, can be used for milling, drilling, tapping, grinding and other processes of processing.

Shank with

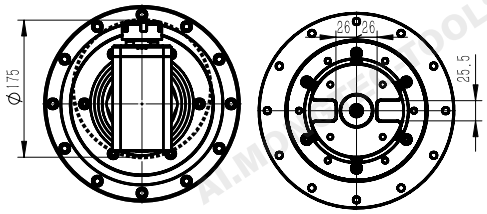

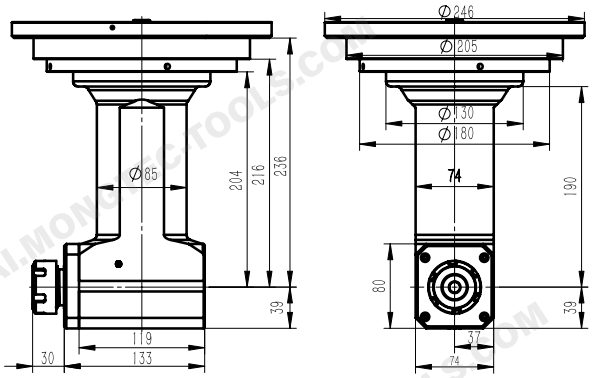

PARAMETERS

Model	BT50QER32Q190/FLANG LINK
Driving Shank	
More Shank	Can Be Used
Max. RPM	5000 RPM
Output Rotation	CW–CW
Ratio of Transmission	1:1
Through the Diameter	D17
Chucking Range	D1–D
Tapping	M6–M16
Torque	65.Nm
WT	18.477 kg
Inventory	
Custom	Customization

Specifications and dimensions are for reference only and subject to change without notice. Please confirm the latest specifications before ordering.

BT50QER32Q680

FLANGE LINK

1. The shell is made of QT500Q7, through aging treatment, precision machining, with high rigidity, high precision, long life and other characteristics. The minimum pass allowed Phi D155
2. The main drive shaft is made of special alloy material, processed by strict heat treatment process, and finally finely ground to achieve high transmission stability.
3. Gear wheel bearings are imported to ensure the transmission of high torque, low noise.
4. Input and output forms are diverse and flexible, not limited to BT or ER interface,can meet all kinds of precision machining equipment, can be used for milling,drilling, tapping, grinding and other processes of processing.

Shank with

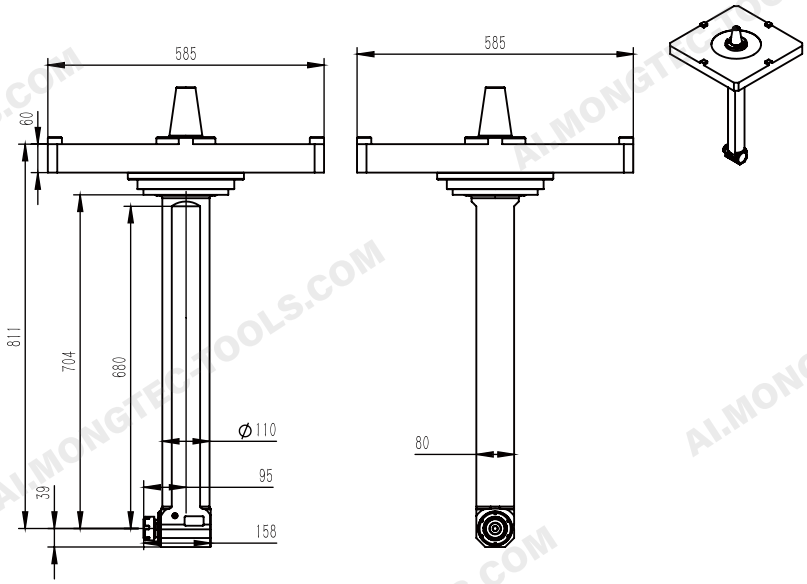

PARAMETERS

Model	BT50QER32Q680/FLANG ELINK
Driving Shank	BT50
More Shank	Can Be Used
Max. RPM	5000 RPM
Output Rotation	CW-CW
Ratio of Transmission	1:1
Through the Diameter	D155
Chucking Range	D1-D20
Tapping	M6-M16
Torque	65.Nm
WT	80 kg
Inventory	
Custom	Customization

Specifications and dimensions are for reference only and subject to change without notice. Please confirm the latest specifications before ordering.

BT50QER32Q2X

1. The shell is made of QT500Q7, through aging treatment, precision processing, with high rigidity, high precision, long life and other characteristics. The minimum pass allowed Phi D195
2. The main drive shaft is made of special alloy material, processed by precise heat treatment process, and finally finely ground and formed to achieve high transmission stability.
3. Gear wheel bearings are imported to ensure the transmission of high torque, low noise.
4. Input and output forms are diverse and flexible, not limited to BT or ER interface,can meet all kinds of precision machining equipment, can be used for milling,drilling, tapping, grinding and other processes of processing.

Shank with

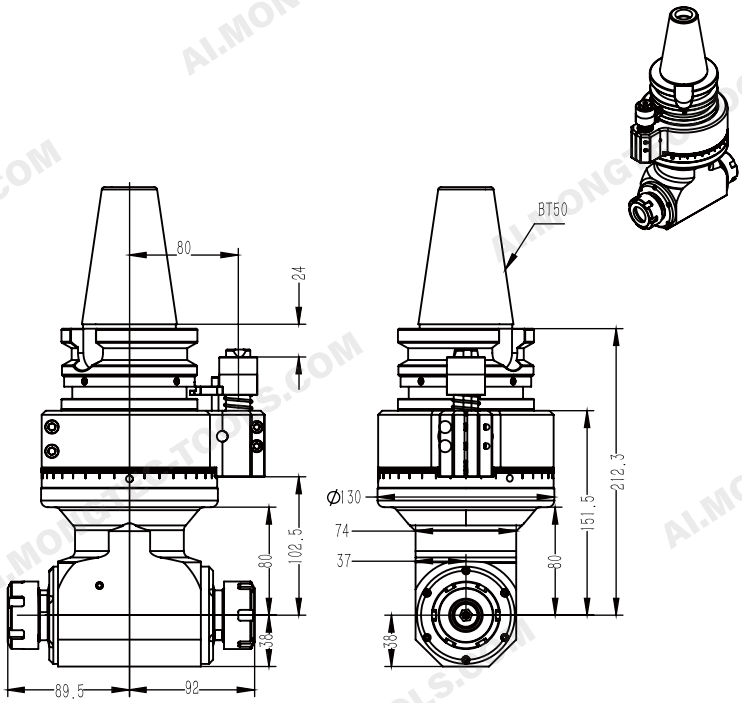

PARAMETERS

Model	BT50QER32Q2X
Driving Shank	BT50
More Shank	Can Be Used
Max. RPM	5000 RPM
Output Rotation	CW-CW
Ratio of Transmission	1:1
Through the Diameter	D195
Chucking Range	D1-D20
Tapping	M6-M16
Torque	65.Nm
WT	14.526 kg
Inventory	Stock
Custom	Customization

Specifications and dimensions are for reference only and subject to change without notice. Please confirm the latest specifications before ordering.

BT50QER40Q80

1. The shell is made of QT500Q7, through aging treatment, precision machining, with high rigidity, high precision, long life and other characteristics. The minimum pass allowed Phi D155
2. The main drive shaft is made of special alloy material, processed by strict heat treatment process, and finally finely ground to achieve high transmission stability.
3. Gear wheel bearings are imported to ensure the transmission of high torque, low noise.
4. Input and output forms are diverse and flexible, not limited to BT or ER interface, can meet all kinds of precision machining equipment, can be used for milling,drilling, tapping, grinding and other processes of processing.

Shank with

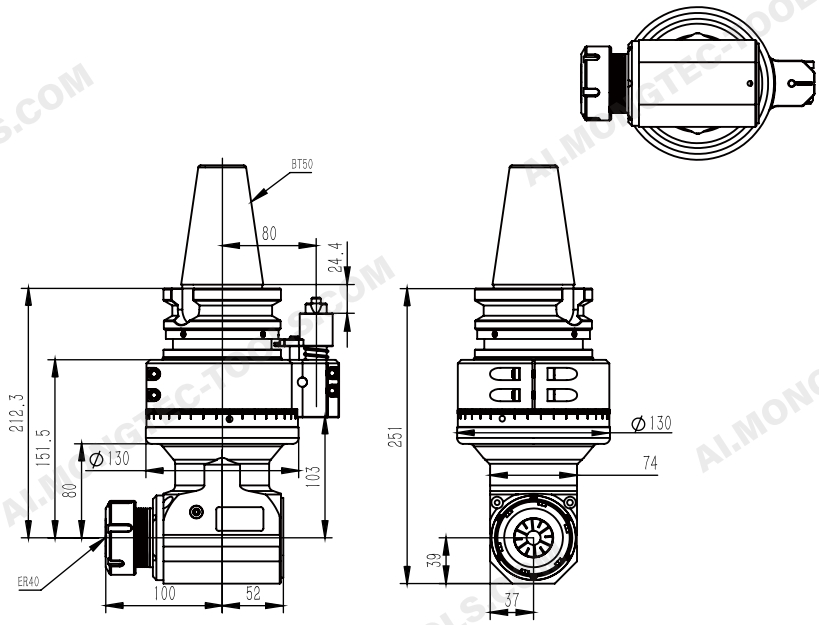

PARAMETERS

Model	BT50QER40Q80
Driving Shank	BT50
More Shank	Can Be Used
Max. RPM	4000 RPM
Output Rotation	CW-CW
Ratio of Transmission	1:1
Through the Diameter	D155
Chucking Range	D1-D26
Tapping	M6-M18
Torque	65.Nm
WT	15.5 kg
Inventory	Stock
Custom	Customization

Specifications and dimensions are for reference only and subject to change without notice. Please confirm the latest specifications before ordering.

BT50QER11MQ60

1. The shell is made of aviation aluminum, through aging treatment, precision processing, with high rigidity, high precision, long life and other characteristics.The minimum pass allowed Phi D55
2. The main drive shaft is made of special alloy material, processed by precise heat treatment process, and finally finely ground and formed to achieve high transmission stability.
3. Gear wheel bearings are imported to ensure the transmission of high torque, low noise.
4. Input and output forms are diverse and flexible, not limited to BT or ER interface, can meet all kinds of precision machining equipment, can be used for milling,drilling, tapping, grinding and other processes of processing.

Shank with

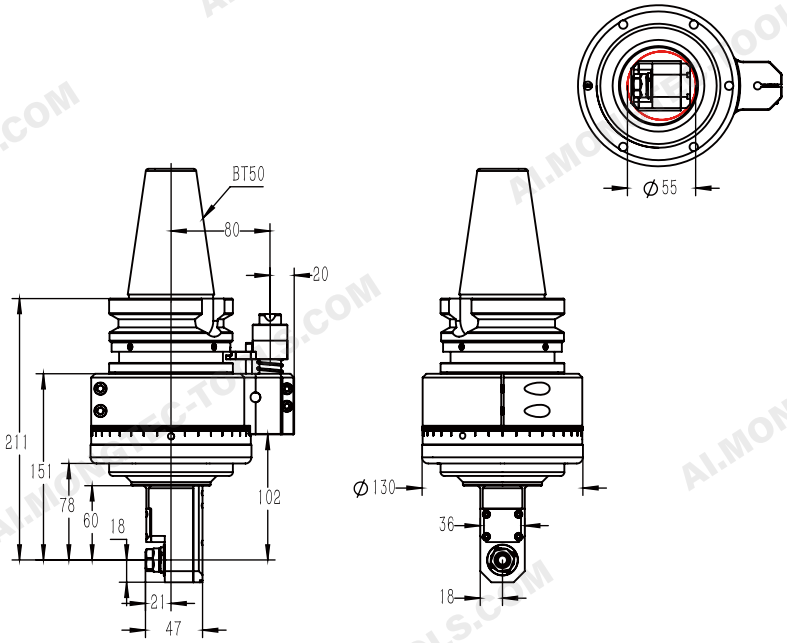

PARAMETERS

Model	BT50QER11MQ60
Driving Shank	BT50
More Shank	Can Be Used
Max. RPM	6000 RPM
Output Rotation	CW-CW
Ratio of Transmission	1:1
Through the Diameter	D55
Chucking Range	D1-D7
Tapping	M5-M6
Torque	10.8 Nm
WT	11.201 kg
Inventory	Stock
Custom	Customization

Specifications and dimensions are for reference only and subject to change without notice. Please confirm the latest specifications before ordering.

BT50QER11MQ100

1. The shell is made of aviation aluminum, through aging treatment, precision machining, with high rigidity, high precision, long life and other characteristics. The minimum pass allowed Phi D55
2. The main drive shaft is made of special alloy material, processed by strict heat treatment process, and finally finely ground to achieve high transmission stability.
3. Gear wheel bearings are imported to ensure the transmission of high torque, low noise.
4. Input and output forms are diverse and flexible, not limited to BT or ER interface,can meet all kinds of precision machining equipment, can be used for millingdrilling, tapping, grinding and other processes of processing.

Shank with

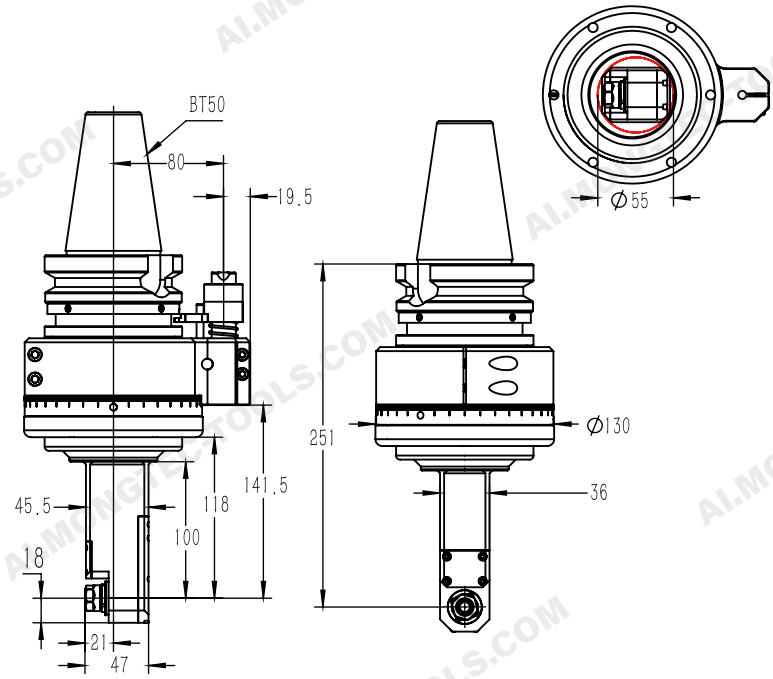

PARAMETERS

Model	BT50QER11MQ100
Driving Shank	BT50
More Shank	Can Be Used
Max. RPM	6000 RPM
Output Rotation	CW-CW
Ratio of Transmission	1:1
Through the Diameter	D55
Chucking Range	D1-D7
Tapping	M5-M6
Torque	10.8 Nm
WT	11.528 kg
Inventory	Stock
Custom	Customization

Specifications and dimensions are for reference only and subject to change without notice. Please confirm the latest specifications before ordering.

BT50QER11MQ140

1. The shell is made of aviation aluminum, through aging treatment, precision processing, with high rigidity, high precision, long life and other characteristics.The minimum pass allowed Phi D55
2. The main drive shaft is made of special alloy material, processed by precise heat treatment process, and finally finely ground and formed to achieve high transmission stability.
3. Gear wheel bearings are imported to ensure the transmission of high torque, low noise.
4. Input and output forms are diverse and flexible, not limited to BT or ER interface,can meet all kinds of precision machining equipment, can be used for milling,drilling, tapping, grinding and other processes of processing.

Shank with

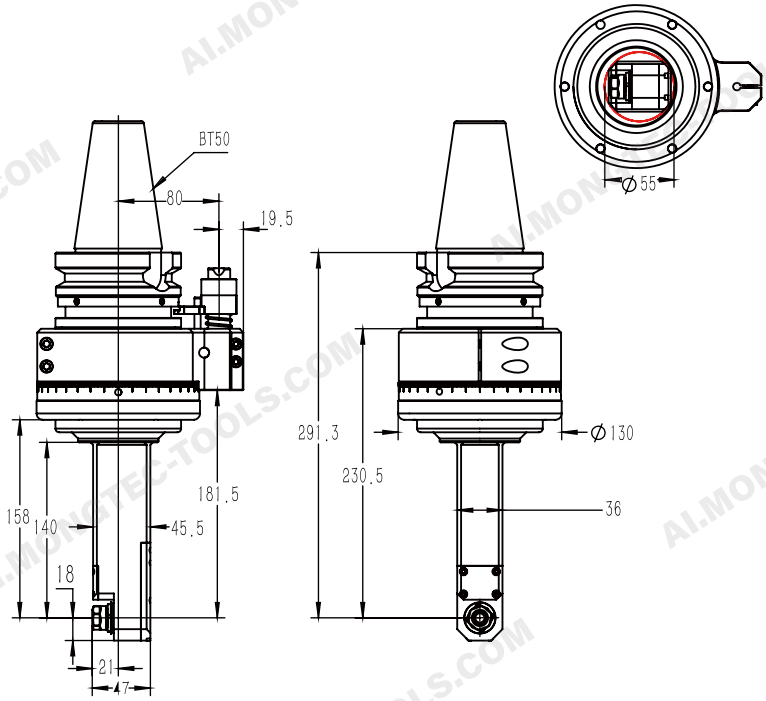

PARAMETERS

Model	BT50QER11MQ140
Driving Shank	BT50
More Shank	Can Be Used
Max. RPM	6000 RPM
Output Rotation	CW-CW
Ratio of Transmission	1:1
Through the Diameter	D55
Chucking Range	D1-D7
Tapping	M5-M6
Torque	10.8 Nm
WT	11.869 kg
Inventory	Stock
Custom	Customization

Specifications and dimensions are for reference only and subject to change without notice. Please confirm the latest specifications before ordering.

BT50QER11MQ210

1. The shell is made of aviation aluminum, through aging treatment, precision machining, with high rigidity, high precision, long life and other characteristics. The minimum pass allowed Phi D55
2. The main drive shaft is made of special alloy material, processed by strict heat treatment process, and finally finely ground to achieve high transmission stability.
3. Gear wheel bearings are imported to ensure the transmission of high torque, low noise.
4. Input and output forms are diverse and flexible, not limited to BT or ER interface,can meet all kinds of precision machining equipment, can be used for milling,drilling, tapping, grinding and other processes of processing.

Shank with

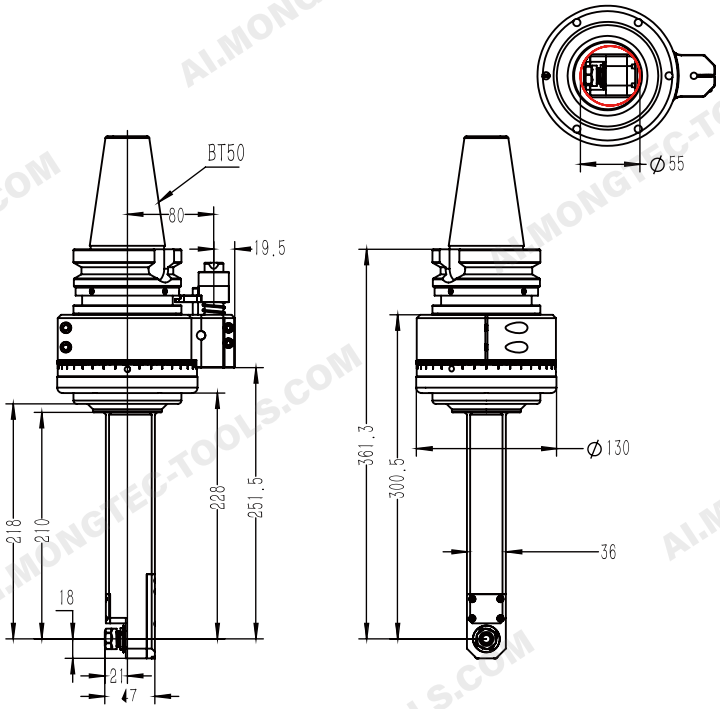

PARAMETERS

Model	BT50QER11MQ210
Driving Shank	BT50
More Shank	Can Be Used
Max. RPM	6000 RPM
Output Rotation	CW-CW
Ratio of Transmission	1:1
Through the Diameter	D55
Chucking Range	D1-D7
Tapping	M5-M6
Torque	10.8 Nm
WT	12.412 kg
Inventory	Stock
Custom	Customization

Specifications and dimensions are for reference only and subject to change without notice. Please confirm the latest specifications before ordering.

BT50QER11MQ300

1. The shell is made of aviation aluminum, through aging treatment, precision processing, with high rigidity, high precision, long life and other characteristics.The minimum pass allowed Phi D50
2. The main drive shaft is made of special alloy material, processed by precise heat treatment process, and finally finely ground and formed to achieve high transmission stability.
3. Gear wheel bearings are imported to ensure the transmission of high torque, low noise.
4. Input and output forms are diverse and flexible, not limited to BT or ER interface,can meet all kinds of precision machining equipment, can be used for milling,drilling, tapping, grinding and other processes of processing.

Shank with

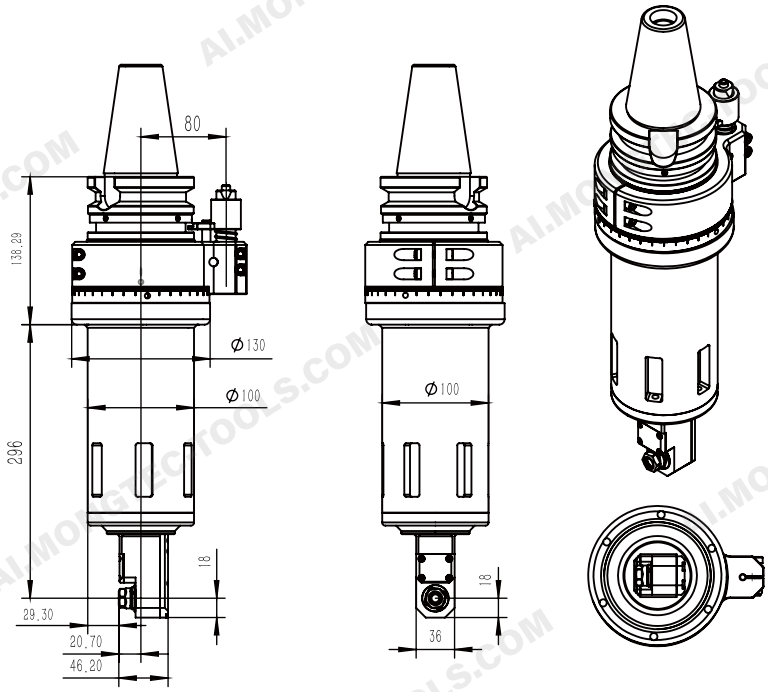

PARAMETERS

Model	BT50QER11MQ300
Driving Shank	BT50
More Shank	Can Be Used
Max. RPM	6000 RPM
Output Rotation	CW-CW
Ratio of Transmission	1:1
Through the Diameter	D50
Chucking Range	D1-D7
Tapping	Milling
Torque	10.8 Nm
WT	14.2 kg
Inventory	Stock
Custom	Customization

Specifications and dimensions are for reference only and subject to change without notice. Please confirm the latest specifications before ordering.

BT50QER16MQ100

1. The shell is made of aviation aluminum, through aging treatment, precision machining, with high rigidity, high precision, long life and other characteristics. The minimum pass allowed Phi D77
2. The main drive shaft is made of special alloy material, processed by strict heat treatment process, and finally finely ground to achieve high transmission stability.
3. Gear wheel bearings are imported to ensure the transmission of high torque, low noise.
4. Input and output forms are diverse and flexible, not limited to BT or ER interface, can meet all kinds of precision machining equipment, can be used for milling,drilling, tapping, grinding and other processes of processing.

Shank with

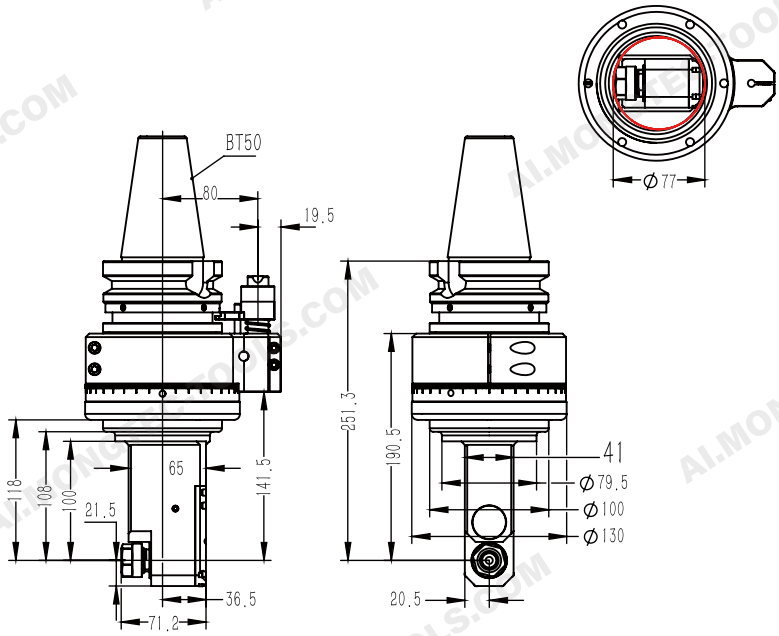

PARAMETERS

Model	BT50QER16MQ100
Driving Shank	BT50
More Shank	Can Be Used
Max. RPM	8000 RPM
Output Rotation	CW-CW
Ratio of Transmission	1:1
Through the Diameter	D77
Chucking Range	D1-D10
Tapping	M5-M8
Torque	18. Nm
WT	12.231 kg
Inventory	Stock
Custom	Customization

Specifications and dimensions are for reference only and subject to change without notice. Please confirm the latest specifications before ordering.

BT50QER16MQ170

1. The shell is made of aviation aluminum, through aging treatment, precision processing, with high rigidity, high precision, long life and other characteristics.The minimum pass allowed Phi D77
2. The main drive shaft is made of special alloy material, processed by precise heat treatment process, and finally finely ground and formed to achieve high transmission stability.
3. Gear wheel bearings are imported to ensure the transmission of high torque, low noise.
4. Input and output forms are diverse and flexible, not limited to BT or ER interface,can meet all kinds of precision machining equipment, can be used for milling,drilling, tapping, grinding and other processes of processing.

Shank with

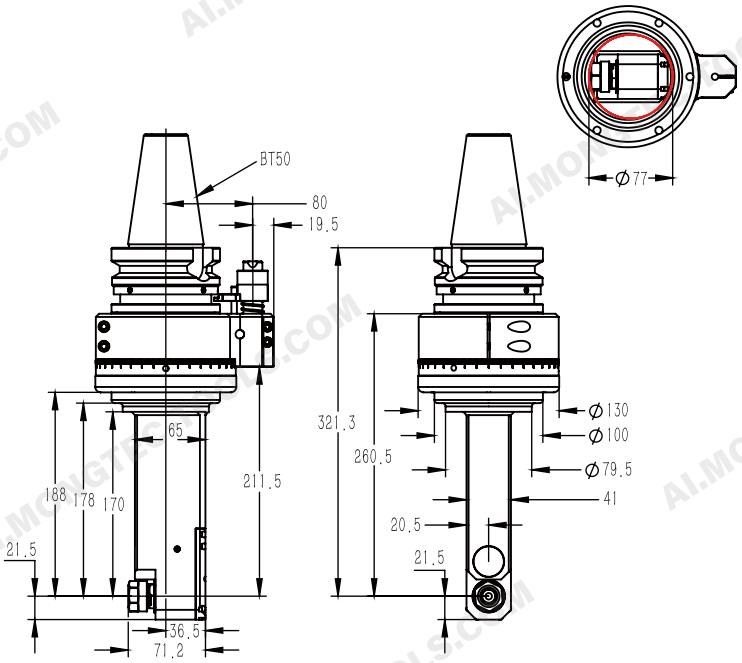

PARAMETERS

Model	BT50QER16MQ170
Driving Shank	BT50
More Shank	Can Be Used
Max. RPM	8000 RPM
Output Rotation	CW-CW
Ratio of Transmission	1:1
Through the Diameter	D77
Chucking Range	D1-D10
Tapping	M5-M8
Torque	18. Nm
WT	13.152 kg
Inventory	Stock
Custom	Customization

Specifications and dimensions are for reference only and subject to change without notice. Please confirm the latest specifications before ordering.

BT50QER20MQ100

1. The shell is made of aviation aluminum, through aging treatment, precision machining, with high rigidity, high precision, long life and other characteristics. The minimum pass allowed Phi D85
2. The main drive shaft is made of special alloy material, processed by strict heat treatment process, and finally finely ground to achieve high transmission stability.
3. Gear wheel bearings are imported to ensure the transmission of high torque, low noise.
4. Input and output forms are diverse and flexible, not limited to BT or ER interface,can meet all kinds of precision machining equipment, can be used for milling,drilling, tapping, grinding and other processes of processing.

Shank with

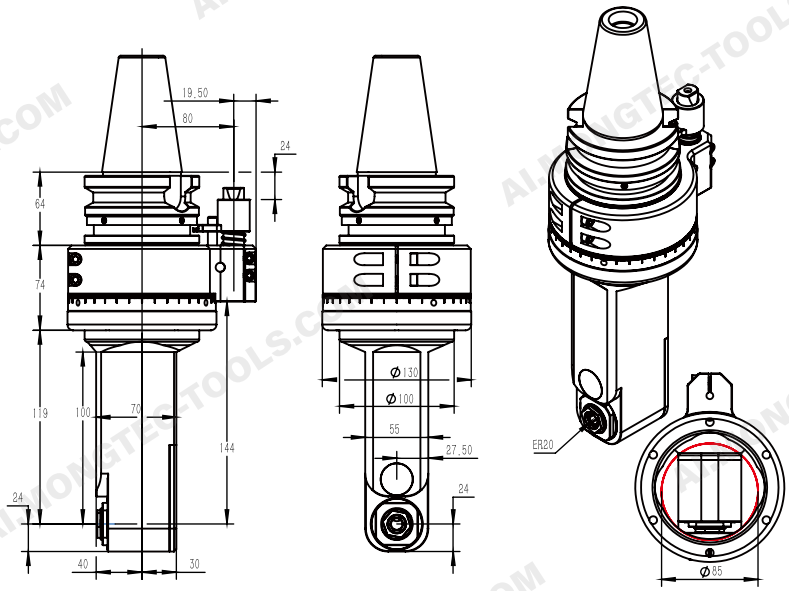

PARAMETERS

Model	BT50QER20MQ100
Driving Shank	BT50
More Shank	Can Be Used
Max. RPM	6000 RPM
Output Rotation	CW-CW
Ratio of Transmission	1:1
Through the Diameter	D85
Chucking Range	D1-D13
Tapping	M5-M10
Torque	30. Nm
WT	13.5 kg
Inventory	Stock
Custom	Customization

Specifications and dimensions are for reference only and subject to change without notice. Please confirm the latest specifications before ordering.

BT50QER20MQ150

1. The shell is made of aviation aluminum, through aging treatment, precision processing, with high rigidity, high precision, long life and other characteristics.The minimum pass allowed Phi D85
2. The main drive shaft is made of special alloy material, processed by precise heat treatment process, and finally finely ground and formed to achieve high transmission stability.
3. Gear wheel bearings are imported to ensure the transmission of high torque, low noise.
4. Input and output forms are diverse and flexible, not limited to BT or ER interface,can meet all kinds of precision machining equipment, can be used for milling,drilling, tapping, grinding and other processes of processing.

Shank with

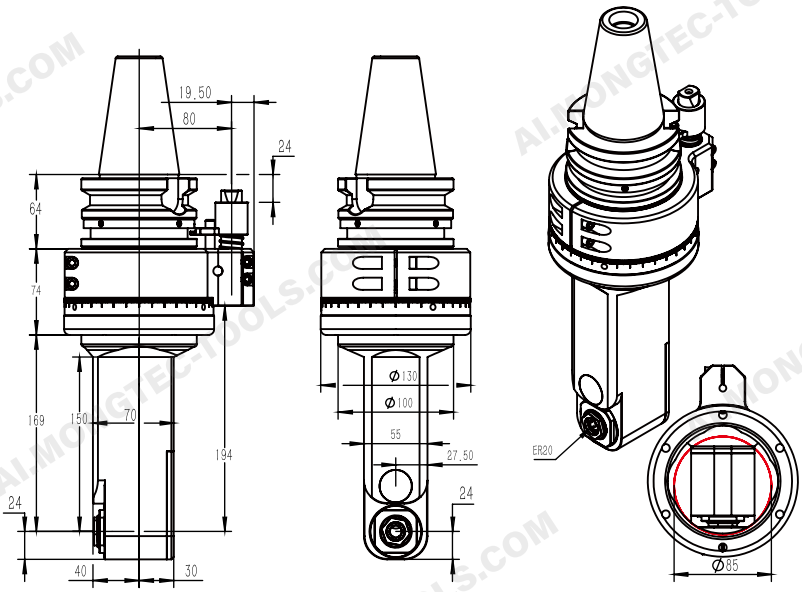

PARAMETERS

Model	BT50QER20MQ150
Driving Shank	BT50
More Shank	Can Be Used
Max. RPM	6000 RPM
Output Rotation	CW-CW
Ratio of Transmission	1:1
Through the Diameter	D85
Chucking Range	D1-D13
Tapping	M5 - M10
Torque	30. Nm
WT	14 kg
Inventory	Stock
Custom	Customization

Specifications and dimensions are for reference only and subject to change without notice. Please confirm the latest specifications before ordering.

BT50QER20MQ180

1. The shell is made of aviation aluminum, through aging treatment, precision machining, with high rigidity, high precision, long life and other characteristics. Theminimum pass allowed Phi D85
2. The main drive shaft is made of special alloy material, processed by strict heat treatment process, and finally finely ground to achieve high transmission stability.
3. Gear wheel bearings are imported to ensure the transmission of high torque, low noise.
4. Input and output forms are diverse and flexible, not limited to BT or ER interface,can meet all kinds of precision machining equipment, can be used for milling,drilling, tapping, grinding and other processes of processing.

Shank with

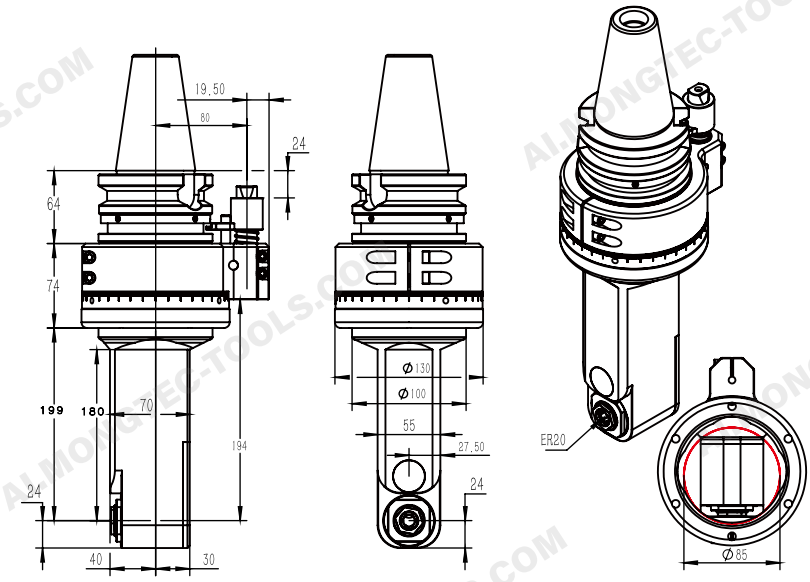

PARAMETERS

Model	BT50QER20MQ180
Driving Shank	BT50
More Shank	Can Be Used
Max. RPM	6000 RPM
Output Rotation	CW-CW
Ratio of Transmission	1:1
Through the Diameter	D85
Chucking Range	D1-D13
Tapping	M5-M10
Torque	30. Nm
WT	14.5 kg
Inventory	Stock
Custom	Customization

Specifications and dimensions are for reference only and subject to change without notice. Please confirm the latest specifications before ordering.

BT50QER25MQ100

1. The shell is made of aviation aluminum, through aging treatment, precision processing, with high rigidity, high precision, long life and other characteristics.The minimum pass allowed Phi D110
2. The main drive shaft is made of special alloy material, processed by precise heat treatment process, and finally finely ground and formed to achieve high transmission stability.
3. Gear wheel bearings are imported to ensure the transmission of high torque, low noise.
4. Input and output forms are diverse and flexible, not limited to BT or ER interface,can meet all kinds of precision machining equipment, can be used for milling,drilling, tapping, grinding and other processes of processing.

Shank with

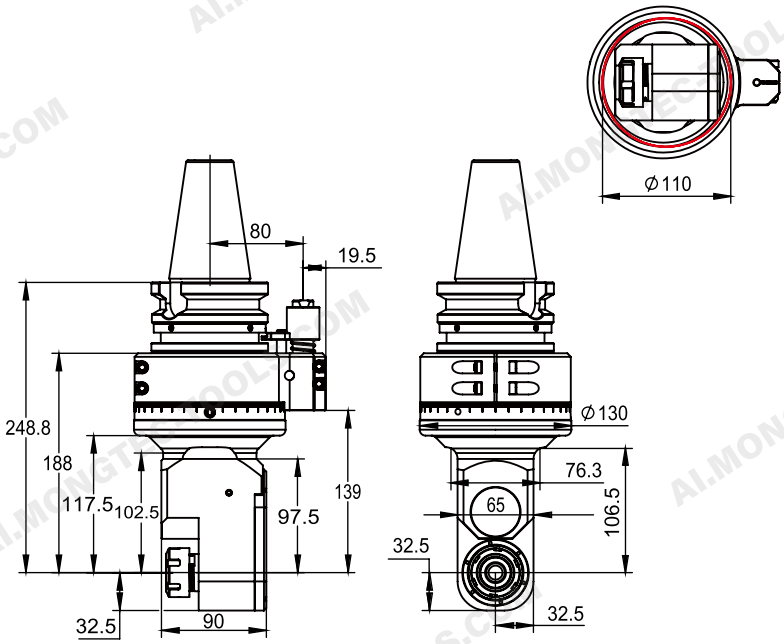

PARAMETERS

Model	BT50QER25MQ100
Driving Shank	BT50
More Shank	Can Be Used
Max. RPM	6000 RPM
Output Rotation	CW-CW
Ratio of Transmission	1:1
Through the Diameter	D110
Chucking Range	D1-D16
Tapping	M6-M14
Torque	46. Nm
WT	12.232 kg
Inventory	Stock
Custom	Customization

Specifications and dimensions are for reference only and subject to change without notice. Please confirm the latest specifications before ordering.

BT50QER25MQ170

1. The shell is made of aviation aluminum, through aging treatment, precision machining, with high rigidity, high precision, long life and other characteristics. The minimum pass allowed Phi D110
2. The main drive shaft is made of special alloy material, processed by strict heat treatment process, and finally finely ground to achieve high transmission stability.
3. Gear wheel bearings are imported to ensure the transmission of high torque, low noise.
4. Input and output forms are diverse and flexible, not limited to BT or ER interface, can meet all kinds of precision machining equipment, can be used for milling,drilling, tapping, grinding and other processes of processing.

Shank with

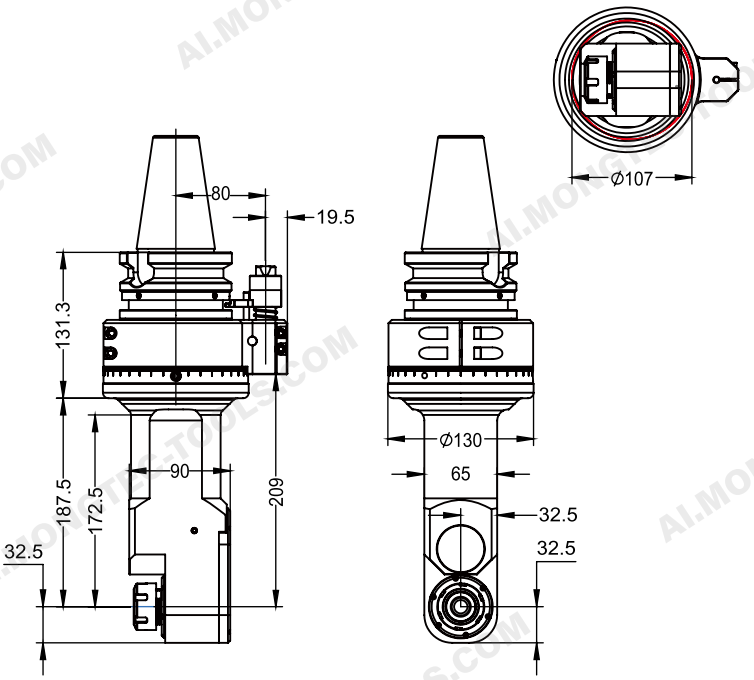

PARAMETERS

Model	BT50QER25MQ170
Driving Shank	BT50
More Shank	Can Be Used
Max. RPM	6000 RPM
Output Rotation	CW-CW
Ratio of Transmission	1:1
Through the Diameter	D110
Chucking Range	D1-D16
Tapping	M6-M14
Torque	46. Nm
WT	15.6 kg
Inventory	Stock
Custom	Customization

Specifications and dimensions are for reference only and subject to change without notice. Please confirm the latest specifications before ordering.

BT50QPER16

1. The shell is made of 40Cr, through aging treatment, precision processing, with high rigidity, high precision, long life and other characteristics. The minimum pass allowed Phi D51
2. The main drive shaft is made of special alloy material, processed by precise heat treatment process, and finally finely ground and formed to achieve high transmission stability.
3. Gear wheel bearings are imported to ensure the transmission of high torque, low noise.
4. Input and output forms are diverse and flexible, not limited to BT or ER interface,can meet all kinds of precision machining equipment, can be used for milling,drilling, tapping, grinding and other processes of processing.

Shank with

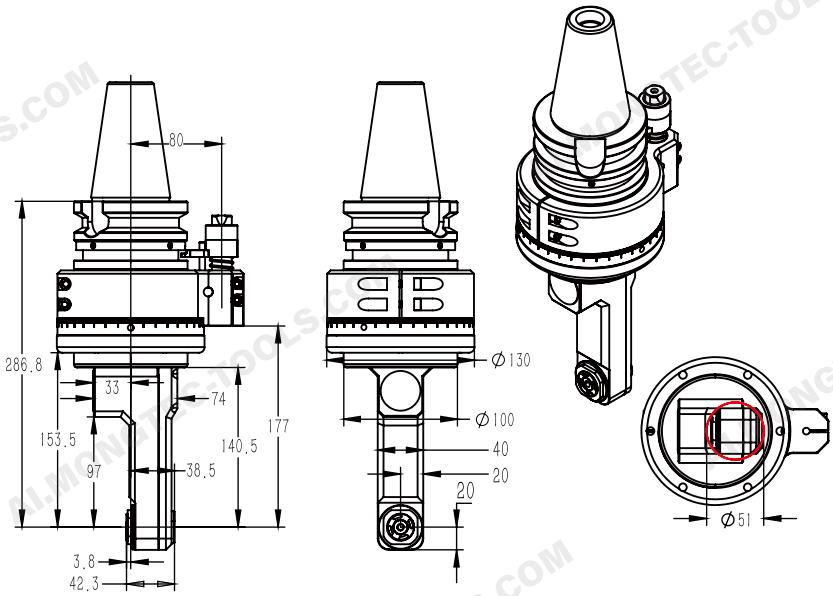

PARAMETERS

Model	BT50QPER16
Driving Shank	BT50
More Shank	Can Be Used
Max. RPM	6000 RPM
Output Rotation	CW-CW
Ratio of Transmission	1:1
Through the Diameter	D51
Chucking Range	D1-D10
Tapping	Milling
Torque	18. Nm
WT	10.074 kg
Inventory	Stock
Custom	Customization

Specifications and dimensions are for reference only and subject to change without notice. Please confirm the latest specifications before ordering.

BT50QPER20

1. The shell is made of 40Cr, through aging treatment, precision machining, with high rigidity, high precision, long life and other characteristics. The minimum pass allowed Phi D67
2. The main drive shaft is made of special alloy material, processed by strict heat treatment process, and finally finely ground to achieve high transmission stability.
3. Gear wheel bearings are imported to ensure the transmission of high torque, low noise.
4. Input and output forms are diverse and flexible, not limited to BT or ER interface,can meet all kinds of precision machining equipment, can be used for milling,drilling, tapping, grinding and other processes of processing.

Shank with

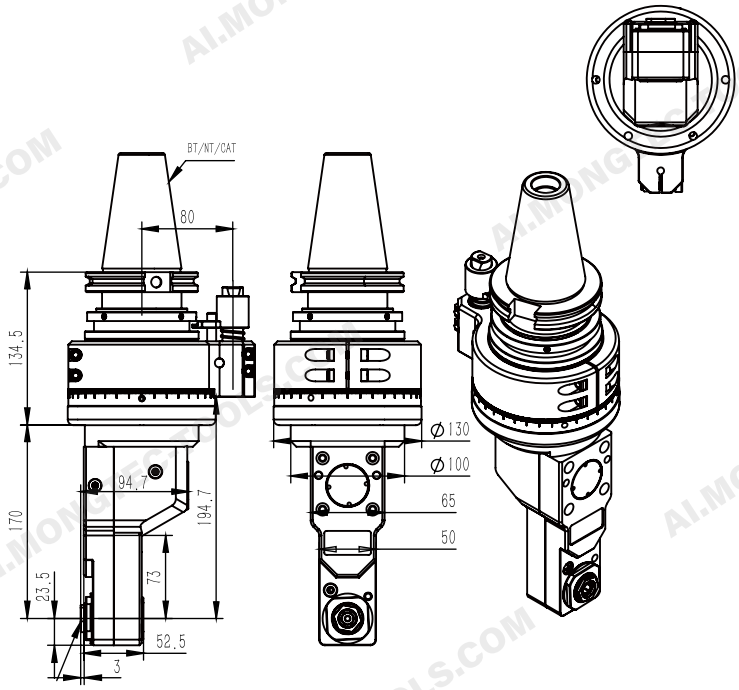

PARAMETERS

Model	BT50-SK50QPER20
Driving Shank	BT50
More Shank	Can Be Used
Max. RPM	6000 RPM
Output Rotation	CW-CW
Ratio of Transmission	1:1
Through the Diameter	D67
Chucking Range	D1-D13
Tapping	M6 -M12
Torque	35. Nm
WT	15.6 kg
Inventory	Stock
Custom	Customization

Specifications and dimensions are for reference only and subject to change without notice. Please confirm the latest specifications before ordering.

BT50QYW16

1. The shell is made of QT500Q7, through aging treatment, precision processing, with high rigidity, high precision, long life and other characteristics. The minimum pass allowed Phi D118
2. The main drive shaft is made of special alloy material, processed by precise heat treatment process, and finally finely ground and formed to achieve high transmission stability.
3. Gear wheel bearings are imported to ensure the transmission of high torque, low noise.
4. Input and output forms are diverse and flexible, not limited to BT or ER interface,can meet all kinds of precision machining equipment, can be used for milling,drilling, tapping, grinding and other processes of processing.

Shank with

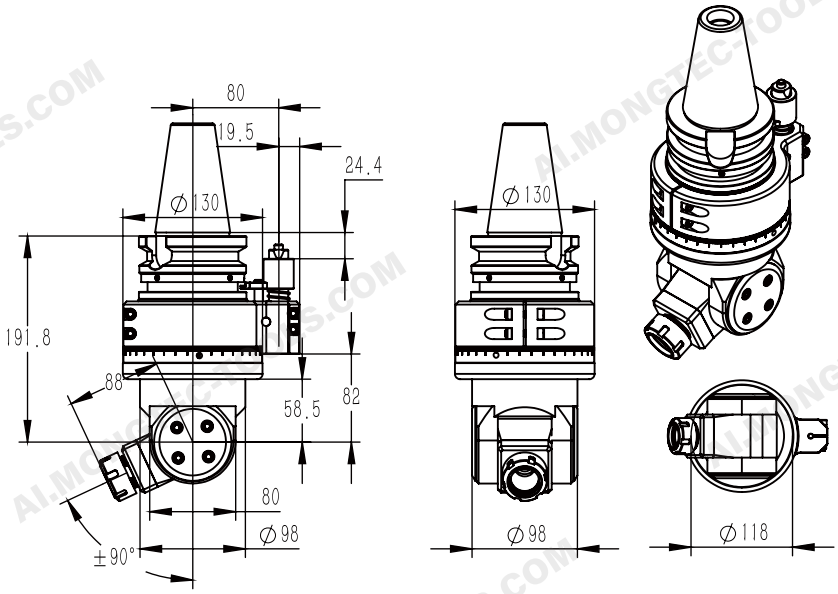

PARAMETERS

Model	BT50QYW16
Driving Shank	BT50
More Shank	Can Be Used
Max. RPM	6000 RPM
Output Rotation	CW-CW
Ratio of Transmission	1:1
Through the Diameter	D118
Chucking Range	D1-D16
Tapping	M6 -M14
Torque	46. Nm
WT	14.15 kg
Inventory	Stock
Custom	Customization

Specifications and dimensions are for reference only and subject to change without notice. Please confirm the latest specifications before ordering.

BT50QYW20

1. The shell is made of QT500Q7, through aging treatment, precision machining, with high rigidity, high precision, long life and other characteristics. The minimum pass allowed Phi D175
2. The main drive shaft is made of special alloy material, processed by strict heat treatment process, and finally finely ground to achieve high transmission stability.
3. Gear wheel bearings are imported to ensure the transmission of high torque, low noise.
4. Input and output forms are diverse and flexible, not limited to BT or ER interface,can meet all kinds of precision machining equipment, can be used for milling,drilling, tapping, grinding and other processes of processing.

Shank with

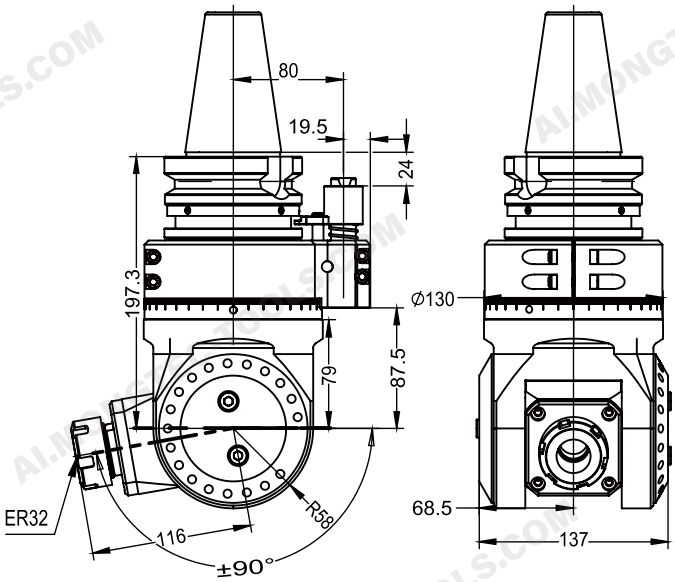

PARAMETERS

Model	BT50QYW20
Driving Shank	BT50
More Shank	Can Be Used
Max. RPM	6000 RPM
Output Rotation	CW-CW
Ratio of Transmission	1:1
Through the Diameter	D175
Chucking Range	D1-D20
Tapping	M6-M16
Torque	65. Nm
WT	19.00 kg
Pendulum Range	±90°
Custom	Customization

Specifications and dimensions are for reference only and subject to change without notice. Please confirm the latest specifications before ordering.

BT50QYW20Q400

FLANGE LINK

1. The shell is made of QT500Q7, through aging treatment, precision processing, with high rigidity, high precision, long life and other characteristics. The minimum pass allowed Phi D1-D20
2. The main drive shaft is made of special alloy material, processed by precise heat treatment process, and finally finely ground and formed to achieve high transmission stability.
3. Gear wheel bearings are imported to ensure the transmission of high torque, low noise.
4. Input and output forms are diverse and flexible, not limited to BT or ER interface,can meet all kinds of precision machining equipment, can be used for milling,drilling, tapping, grinding and other processes of processing.

Shank with

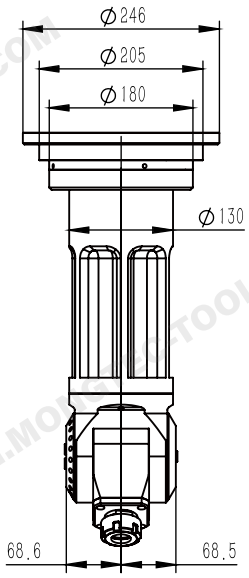

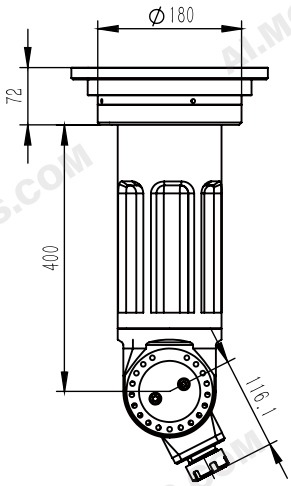

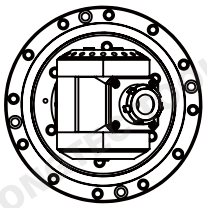

PARAMETERS

Model	BT50QYW20Q400/FLANG ELINK
Driving Shank	BT50
More Shank	Can Be Used
Max. RPM	4000 RPM
Output Rotation	CW-CW
Ratio of Transmission	1:1
Through the Diameter	D155
Chucking Range	D1-D20
Tapping	M6-M14
Torque	65. Nm
WT	35.812 kg
Inventory	Stock
Custom	Customization

Specifications and dimensions are for reference only and subject to change without notice. Please confirm the latest specifications before ordering.

BT50QYW20Q500

FLANGE LINK

1. The shell is made of QT500Q7, through aging treatment, precision machining, with high rigidity, high precision, long life and other characteristics. The minimum pass allowed Phi D1-D20
2. The main drive shaft is made of special alloy material, processed by strict heat treatment process, and finally finely ground to achieve high transmission stability.
3. Gear wheel bearings are imported to ensure the transmission of high torque, low noise.
4. Input and output forms are diverse and flexible, not limited to BT or ER interface, can meet all kinds of precision machining equipment, can be used for milling,drilling, tapping, grinding and other processes of processing.

Shank with

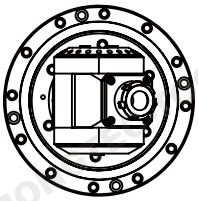

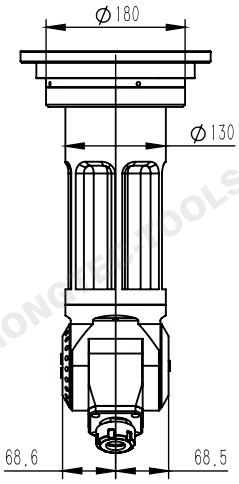

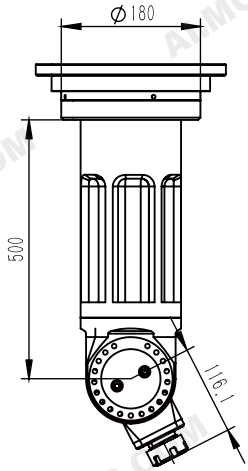

PARAMETERS

Model	BT50QYW20Q500/ FLANG ELINK
Driving Shank	BT50
More Shank	Can Be Used
Max. RPM	4000 RPM
Output Rotation	CW-CW
Ratio of Transmission	1:1
Through the Diameter	D155
Chucking Range	D1-D20
Tapping	M6-M14
Torque	65. Nm
WT	38.12 kg
Inventory	Stock
Custom	Customization

Specifications and dimensions are for reference only and subject to change without notice. Please confirm the latest specifications before ordering.

BT50QWXER32

1. The shell is made of aviation aluminum, through aging treatment, precision processing, with high rigidity, high precision, long life and other characteristics.The minimum pass allowed Phi 155mm
2. The main drive shaft is made of special alloy material, processed by precise heat treatment process, and finally finely ground and formed to achieve high transmission stability.
3. Gear wheel bearings are imported to ensure the transmission of high torque, low noise.
4. Input and output forms are diverse and flexible, not limited to BT or ER interface,can meet all kinds of precision machining equipment, can be used for milling,drilling, tapping, grinding and other processes of processing.

Shank with

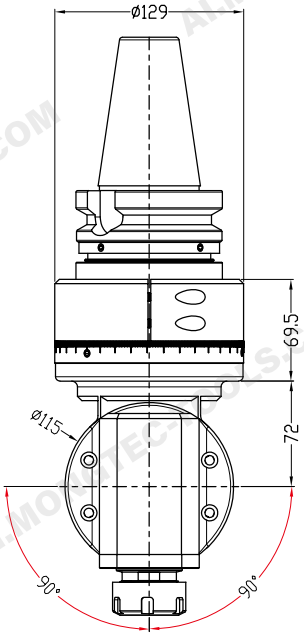

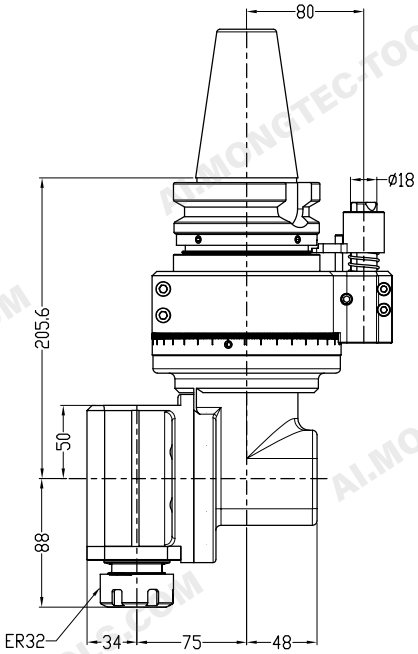

PARAMETERS

Model	BT50QWXER32
Driving Shank	BT50
More Shank	Can Be Used
Max. RPM	5000 RPM
Output Rotation	CW-CW
Ratio of Transmission	1:1
Through the Diameter	155 mm
Chucking Range	1-20 mm
Tapping	M6-M16
Torque	65. Nm
WT	13 kg
Inventory	Stock
Custom	Customization

Specifications and dimensions are for reference only and subject to change without notice. Please confirm the latest specifications before ordering.

BT50QAER25MQ100

1. The shell is made of aviation aluminum, through aging treatment, precision processing, with high rigidity, high precision, long life and other characteristics.The minimum pass allowed Phi D95
2. The main drive shaft is made of special alloy material, processed by precise heat treatment process, and finally finely ground and formed to achieve high transmission stability.
3. Gear wheel bearings are imported to ensure the transmission of high torque, low noise.
4. Input and output forms are diverse and flexible, not limited to BT or ER interface,can meet all kinds of precision machining equipment, can be used for milling,drilling, tapping, grinding and other processes of processing.

Shank with

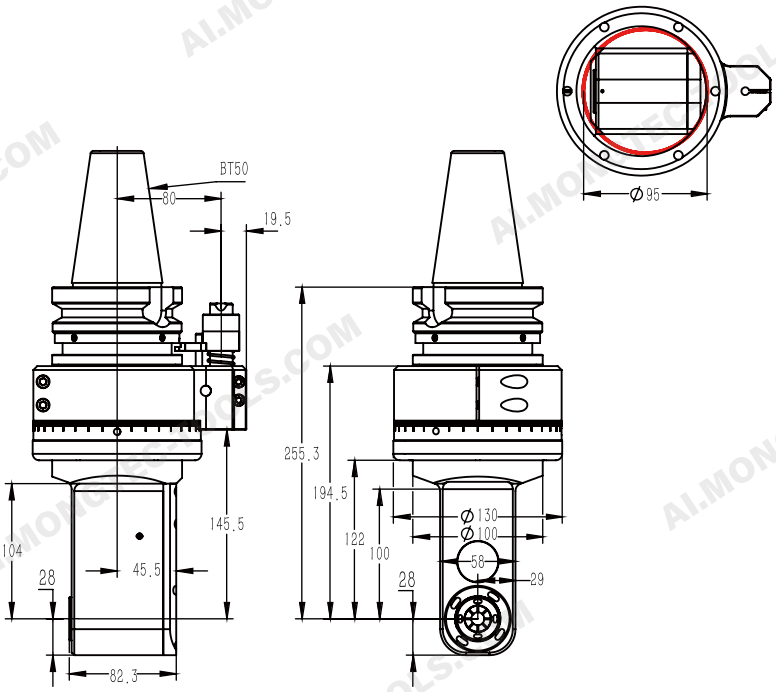

PARAMETERS

Model	BT50QAER25MQ100
Driving Shank	BT50
More Shank	Can Be Used
Max. RPM	6000 RPM
Output Rotation	CW-CW
Ratio of Transmission	1:1
Through the Diameter	D95
Chucking Range	D1-D16
Tapping	M6-M14
Torque	46. Nm
WT	11.970 kg
Inventory	Stock
Custom	Customization

Specifications and dimensions are for reference only and subject to change without notice. Please confirm the latest specifications before ordering.

BT50QAER25MQ250

1. The shell is made of aviation aluminum, through aging treatment, precision machining, with high rigidity, high precision, long life and other characteristics. The minimum pass allowed Phi D95
2. The main drive shaft is made of special alloy material, processed by strict heat treatment process, and finally finely ground to achieve high transmission stability.
3. Gear wheel bearings are imported to ensure the transmission of high torque, low noise.
4. Input and output forms are diverse and flexible, not limited to BT or ER interface,can meet all kinds of precision machining equipment, can be used for milling,drilling, tapping, grinding and other processes of processing.

Shank with

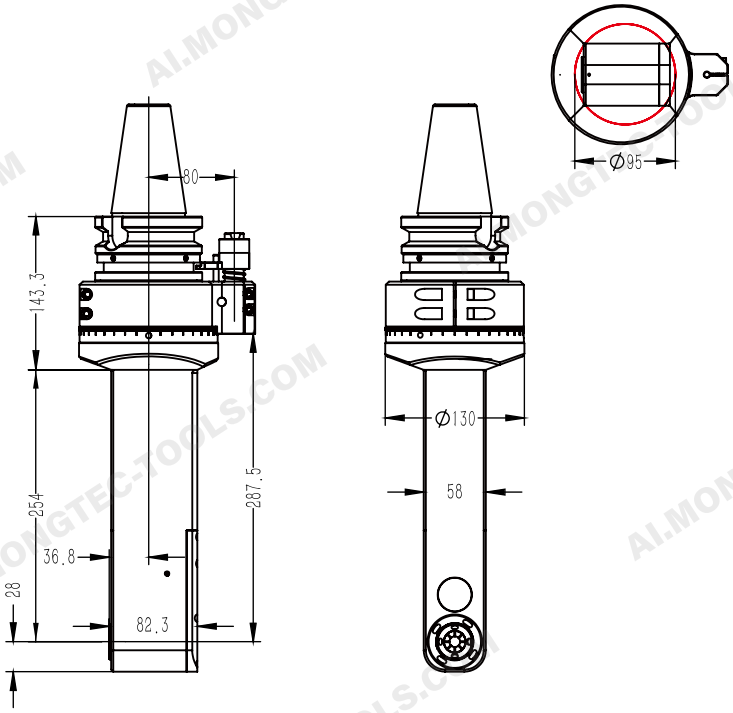

PARAMETERS

Model	BT50QAER25MQ250
Driving Shank	BT50
More Shank	Can Be Used
Max. RPM	6000 RPM
Output Rotation	CW-CW
Ratio of Transmission	1:1
Through the Diameter	D95
Chucking Range	D1-D16
Tapping	M6-M14
Torque	46. Nm
WT	13.5 kg
Inventory	Stock
Custom	Customization

Specifications and dimensions are for reference only and subject to change without notice. Please confirm the latest specifications before ordering.

BT50QFMB22MQF63

1. The shell is made of aviation aluminum, through aging treatment, precision machining, with high rigidity, high precision, long life and other characteristics. The minimum pass allowed Phi D95
2. The main drive shaft is made of special alloy material, processed by strict heat treatment process, and finally finely ground to achieve high transmission stability.
3. Gear wheel bearings are imported to ensure the transmission of high torque, low noise.
4. Input and output forms are diverse and flexible, not limited to BT or ER interface, can meet all kinds of precision machining equipment, can be used for milling,drilling, tapping, grinding and other processes of processing.

Shank with

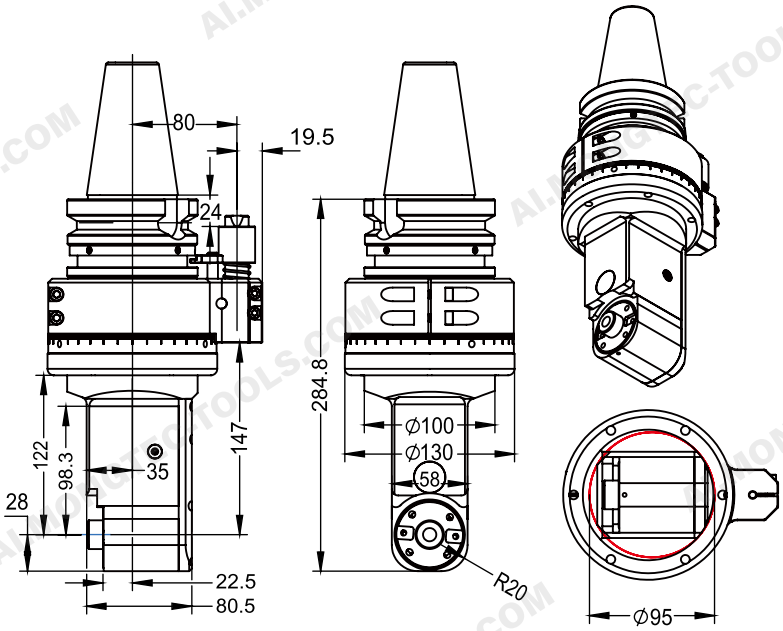

PARAMETERS

Model	BT50QFMB22MQF63
Driving Shank	BT50
More Shank	Can Be Used
Max. RPM	6000 RPM
Output Rotation	CW-CW
Ratio of Transmission	1:1
Through the Diameter	D95
Chucking Range	D1-D16
Tapping	M6-M14
Torque	46. Nm
WT	11.730 kg
Inventory	Stock
Custom	Customization

Specifications and dimensions are for reference only and subject to change without notice. Please confirm the latest specifications before ordering.

BT50QFMB22Q160

1. The shell is made of aviation aluminum, through aging treatment, precision processing, with high rigidity, high precision, long life and other characteristics.The minimum pass allowed Phi D133
2. The main drive shaft is made of special alloy material, processed by precise heat treatment process, and finally finely ground and formed to achieve high transmission stability.
3. Gear wheel bearings are imported to ensure the transmission of high torque, low noise.
4. Input and output forms are diverse and flexible, not limited to BT or ER interface, can meet all kinds of precision machining equipment, can be used for milling,drilling, tapping, grinding and other processes of processing.

Shank with

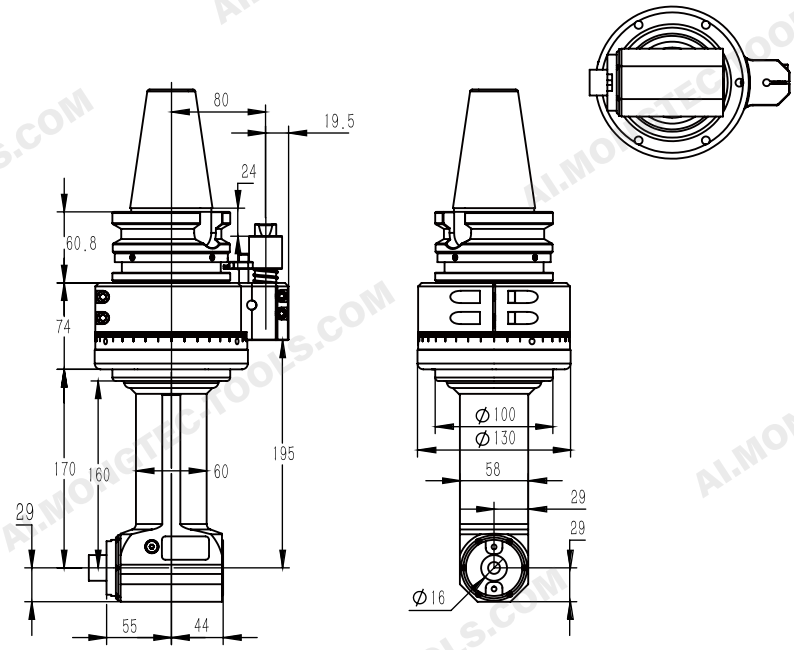

PARAMETERS

Model	BT50QFMB22Q160
Driving Shank	BT50
More Shank	Can Be Used
Max. RPM	4500 RPM
Output Rotation	CW-CW
Ratio of Transmission	1:1
Through the Diameter	D133
Chucking Range	FMB22
Tapping	
Torque	46.Nm
WT	13.610 kg
Inventory	Stock
Custom	Customization

Specifications and dimensions are for reference only and subject to change without notice. Please confirm the latest specifications before ordering.

BT50QFMB22QD59

1. The shell is made of aviation aluminum, through aging treatment, precision machining, with high rigidity, high precision, long life and other characteristics. The minimum pass allowed Phi D155
2. The main drive shaft is made of special alloy material, processed by strict heat treatment process, and finally finely ground to achieve high transmission stability.
3. Gear wheel bearings are imported to ensure the transmission of high torque, low noise.
4. Input and output forms are diverse and flexible, not limited to BT or ER interface,can meet all kinds of precision machining equipment, can be used for milling,drilling, tapping, grinding and other processes of processing.

Shank with

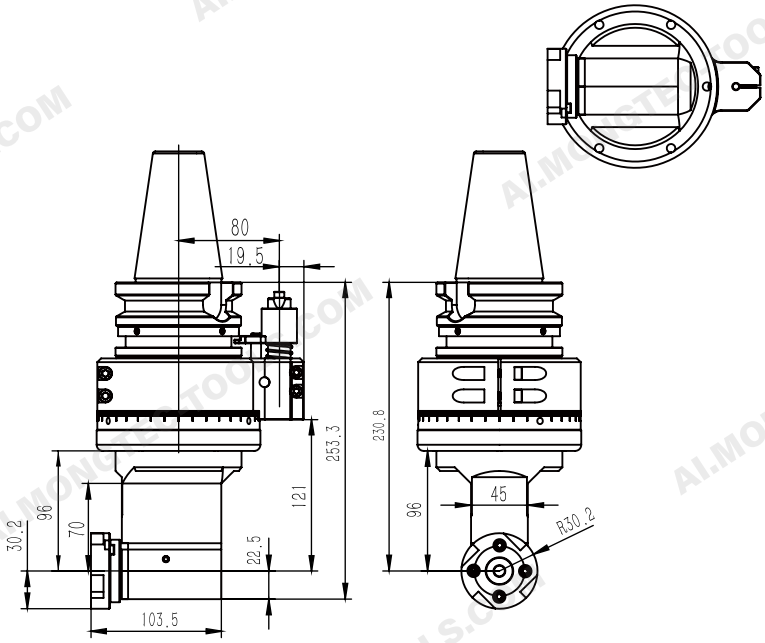

PARAMETERS

Model	BT50QFMB22QD59
Driving Shank	BT50
More Shank	Can Be Used
Max. RPM	4500 RPM
Output Rotation	CW-CW
Ratio of Transmission	1:1
Through the Diameter	D155
Chucking Range	D22
Tapping	
Torque	35.Nm
WT	14.5 kg
Inventory	Stock
Custom	Customization

Specifications and dimensions are for reference only and subject to change without notice. Please confirm the latest specifications before ordering.

BT50QBT40Q4X90°

1. The shell is made of aviation aluminum, through aging treatment, precision processing, with high rigidity, high precision, long life and other characteristics.The minimum pass allowed Phi D200
2. The main drive shaft is made of special alloy material, processed by precise heat treatment process, and finally finely ground and formed to achieve high transmission stability.
3. Gear wheel bearings are imported to ensure the transmission of high torque, low noise.
4. Input and output forms are diverse and flexible, not limited to BT or ER interface,can meet all kinds of precision machining equipment, can be used for milling,drilling, tapping, grinding and other processes of processing.

Shank with

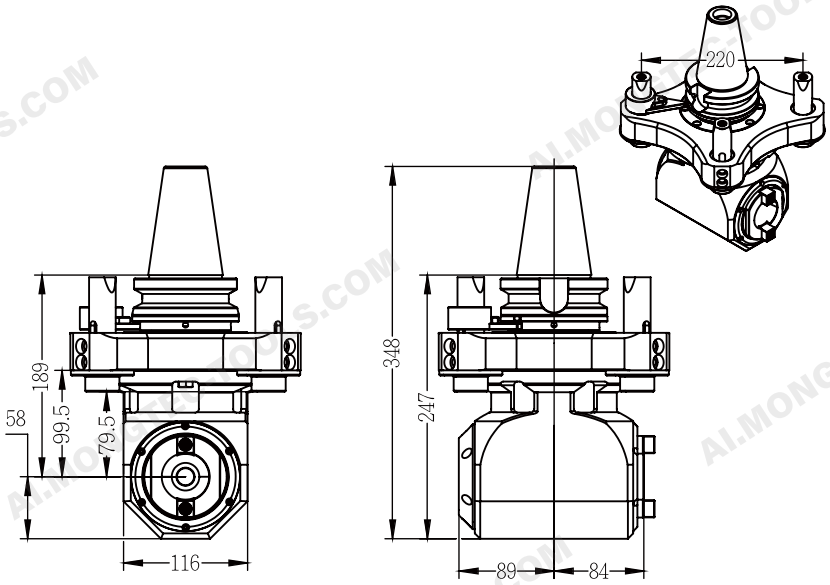

PARAMETERS

Model	BT50QBT40Q4X90°
Driving Shank	BT50
More Shank	Can Be Used
Max. RPM	2500 RPM
Output Rotation	CCW-CW
Ratio of Transmission	1:1
Through the Diameter	D200
Chucking Range	BT40
Tapping	M6-M32
Torque	200.Nm
WT	22 kg
Inventory	Stock
Custom	Customization

Specifications and dimensions are for reference only and subject to change without notice. Please confirm the latest specifications before ordering.

BT50QBT40Q160

FLANGE LINK

1. The shell is made of aviation aluminum, through aging treatment, precision machining, with high rigidity, high precision, long life and other characteristics. The minimum pass allowed Phi D190
2. The main drive shaft is made of special alloy material, processed by strict heat treatment process, and finally finely ground to achieve high transmission stability.
3. Gear wheel bearings are imported to ensure the transmission of high torque, low noise.
4. Input and output forms are diverse and flexible, not limited to BT or ER interface,can meet all kinds of precision machining equipment, can be used for milling,drilling, tapping, grinding and other processes of processing.

Shank with

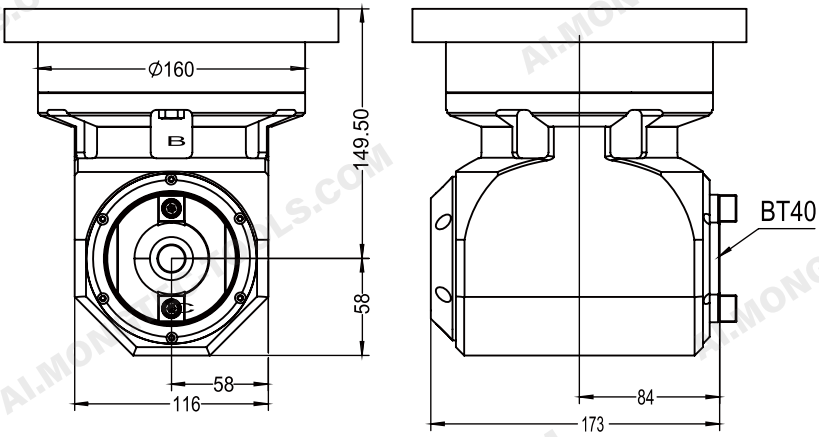

PARAMETERS

Model	BT50QBT40Q160/Flange Link
Driving Shank	BT50
More Shank	Can Be Used
Max. RPM	3000 RPM
Output Rotation	CW-CW
Ratio of Transmission	1:1
Through the Diameter	D190
Chucking Range	BT40
Tapping	M6 -M20
Torque	65 Nm
WT	15.620 kg
Inventory	Stock
Custom	Customization

Specifications and dimensions are for reference only and subject to change without notice. Please confirm the latest specifications before ordering.

BT50QBT40Q300

1. The shell is made of aviation aluminum, through aging treatment, precision processing, with high rigidity, high precision, long life and other characteristics. The minimum pass allowed Phi D180
2. The main drive shaft is made of special alloy material, processed by precise heat treatment process, and finally finely ground and formed to achieve high transmission stability.
3. Gear wheel bearings are imported to ensure the transmission of high torque, low noise.
4. Input and output forms are diverse and flexible, not limited to BT or ER interface,can meet all kinds of precision machining equipment, can be used for milling,drilling, tapping, grinding and other processes of processing.

Shank with

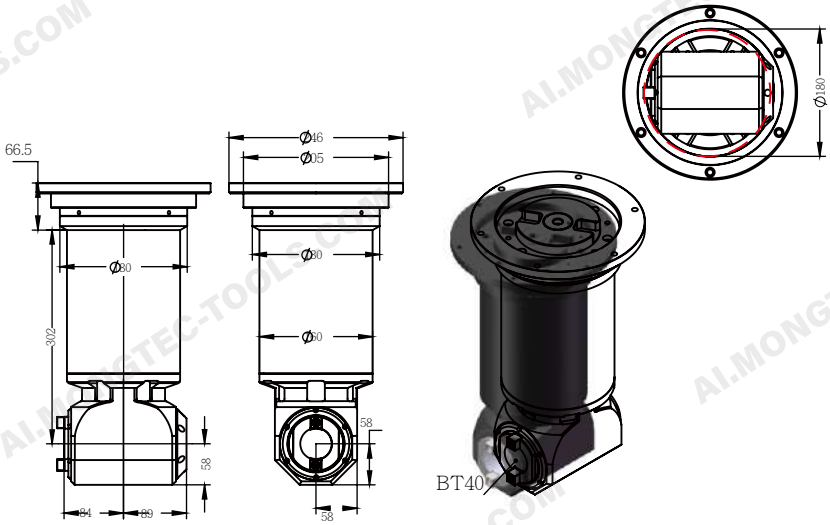

PARAMETERS

Model	BT50QBT40Q300
Driving Shank	BT50
More Shank	Can Be Used
Max. RPM	2500 RPM
Output Rotation	CCW-CW
Ratio of Transmission	1:1
Through the Diameter	D180
Chucking Range	BT40
Tapping	M6-M24
Torque	100.Nm
WT	43 kg
Inventory	10 Days
Custom	Customization

Specifications and dimensions are for reference only and subject to change without notice. Please confirm the latest specifications before ordering.

BT50QBT40Q580L

1. The shell is made of aviation aluminum, through aging treatment, precision machining, with high rigidity, high precision, long life and other characteristics. The minimum pass allowed Phi D180
2. The main drive shaft is made of special alloy material, processed by strict heat treatment process, and finally finely ground to achieve high transmission stability.
3. Gear wheel bearings are imported to ensure the transmission of high torque, low noise.
4. Input and output forms are diverse and flexible, not limited to BT or ER interface, can meet all kinds of precision machining equipment, can be used for milling,drilling, tapping, grinding and other processes of processing.

Shank with

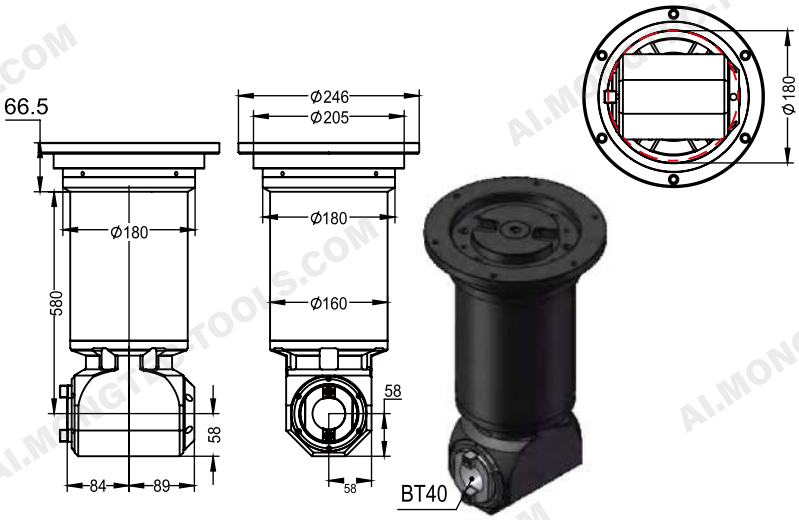

PARAMETERS

Model	BT50QBT40Q580L
Driving Shank	BT50
More Shank	Can Be Used
Max. RPM	2500 RPM
Output Rotation	CCW-CW
Ratio of Transmission	1:1
Through the Diameter	D180
Chucking Range	BT40
Tapping	M6-M24
Torque	100.Nm
WT	64 kg
Inventory	Stock
Custom	Customization

Specifications and dimensions are for reference only and subject to change without notice. Please confirm the latest specifications before ordering.

BT50QBT40Q700

1. The shell is made of aviation aluminum, through aging treatment, precision processing, with high rigidity, high precision, long life and other characteristics.The minimum pass allowed Phi D200
2. The main drive shaft is made of special alloy material, processed by precise heat treatment process, and finally finely ground and formed to achieve high transmission stability.
3. Gear wheel bearings are imported to ensure the transmission of high torque, low noise.
4. Input and output forms are diverse and flexible, not limited to BT or ER interface,can meet all kinds of precision machining equipment, can be used for milling,drilling, tapping, grinding and other processes of processing.

Shank with

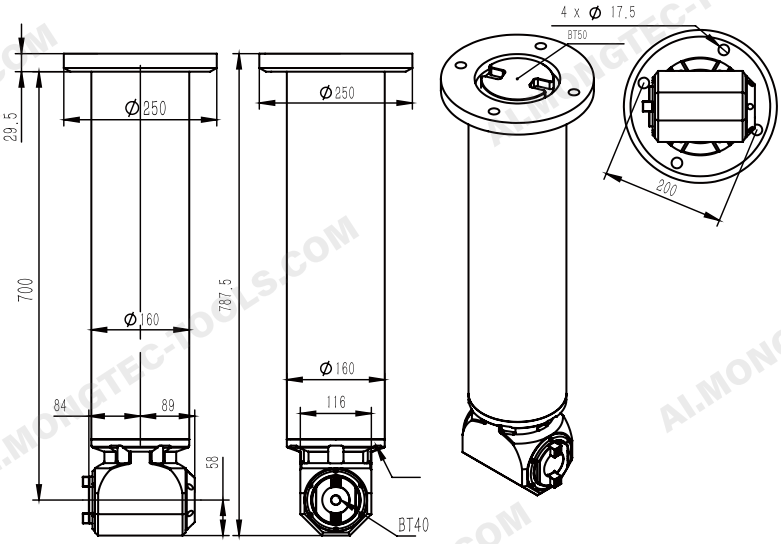

PARAMETERS

Model	BT50QBT40Q700
Driving Shank	BT50
More Shank	Can Be Used
Max. RPM	3000 RPM
Output Rotation	CCW-CW
Ratio of Transmission	1:1
Through the Diameter	D200
Chucking Range	BT40
Tapping	M6-M20
Torque	100. Nm
WT	75 kg
Inventory	10 Days Of Stock
Custom	Customization

Specifications and dimensions are for reference only and subject to change without notice. Please confirm the latest specifications before ordering.

BT50QFMB27Q2X

1. The shell is made of aviation aluminum, through aging treatment, precision machining, with high rigidity, high precision, long life and other characteristics. The minimum pass allowed Phi D200
2. The main drive shaft is made of special alloy material, processed by strict heat treatment process, and finally finely ground to achieve high transmission stability.
3. Gear wheel bearings are imported to ensure the transmission of high torque, low noise.
4. Input and output forms are diverse and flexible, not limited to BT or ER interface,can meet all kinds of precision machining equipment, can be used for milling,drilling, tapping, grinding and other processes of processing.

Shank with

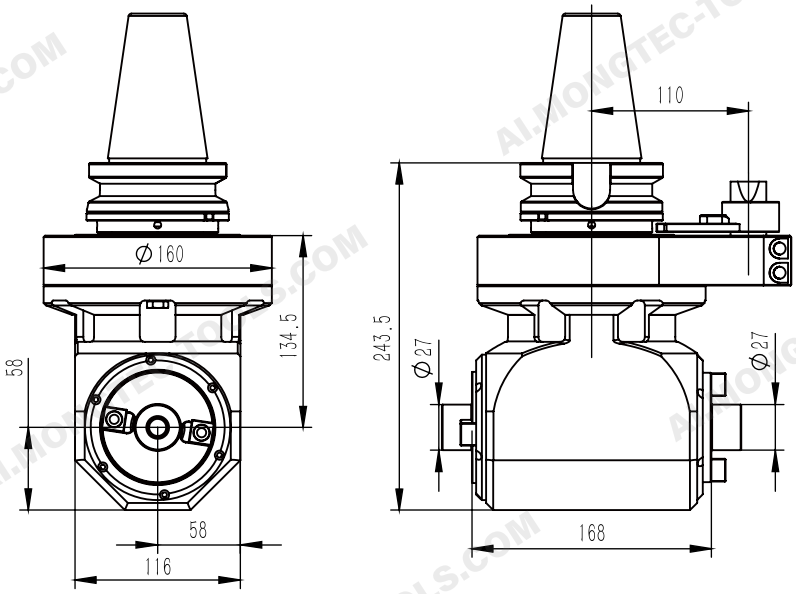

PARAMETERS

Model	BT50QFMB27Q2X
Driving Shank	BT50
More Shank	Can Be Used
Max. RPM	2500 RPM
Output Rotation	CW-CW/CCW-CW
Ratio of Transmission	1:1
Through the Diameter	D200
Chucking Range	FMB32
Tapping	
Torque	100.Nm
WT	18.5 kg
Inventory	Stock
Custom	Customization

Specifications and dimensions are for reference only and subject to change without notice. Please confirm the latest specifications before ordering.

BT50QFMB27Q2XQ400

1. The shell is made of aviation aluminum, through aging treatment, precision processing, with high rigidity, high precision, long life and other characteristics. The minimum pass allowed Phi D210
2. The main drive shaft is made of special alloy material, processed by precise heat treatment process, and finally finely ground and formed to achieve high transmission stability.
3. Gear wheel bearings are imported to ensure the transmission of high torque, low noise.
4. Input and output forms are diverse and flexible, not limited to BT or ER interface,can meet all kinds of precision machining equipment, can be used for milling,drilling, tapping, grinding and other processes of processing.

Shank with

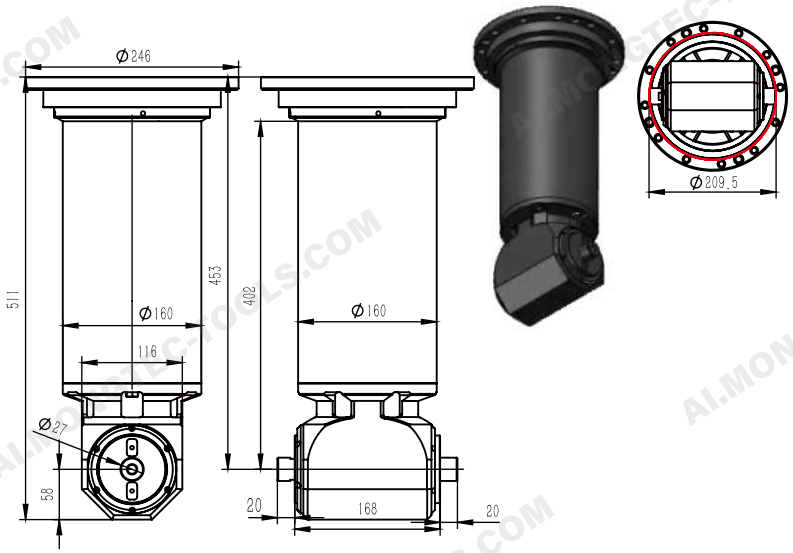

PARAMETERS

Model	BT50QFMB27Q2XQ400
Driving Shank	BT50
More Shank	Can Be Used
Max. RPM	2500 RPM
Output Rotation	CW-CW / CCW-CW
Ratio of Transmission	1:1
Through the Diameter	D210
Chucking Range	FMB27
Tapping	D120
Torque	150.Nm
WT	53 kg
Inventory	1 0 Days
Custom	Customization

Specifications and dimensions are for reference only and subject to change without notice. Please confirm the latest specifications before ordering.

BT50QBT40

1. The shell is made of aviation aluminum, through aging treatment, precision machining, with high rigidity, high precision, long life and other characteristics. The minimum pass allowed Phi D200
2. The main drive shaft is made of special alloy material, processed by strict heat treatment process, and finally finely ground to achieve high transmission stability.
3. Gear wheel bearings are imported to ensure the transmission of high torque, low noise.
4. Input and output forms are diverse and flexible, not limited to BT or ER interface,can meet all kinds of precision machining equipment, can be used for milling,drilling, tapping, grinding and other processes of processing.

Shank with

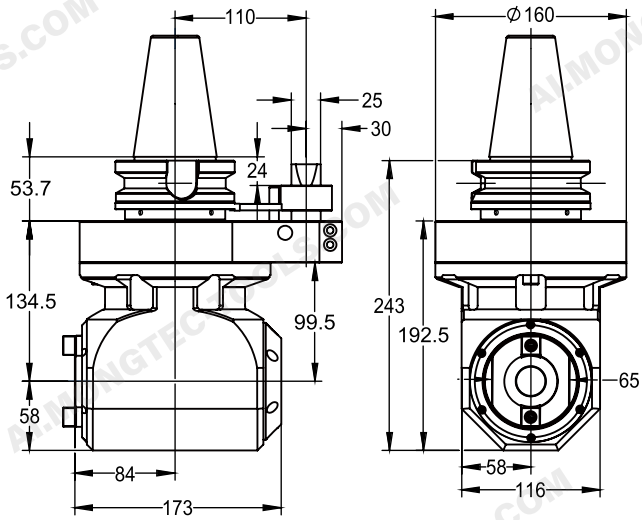

PARAMETERS

Model	BT50QBT40
Driving Shank	BT50
More Shank	Can Be Used
Max. RPM	2500 RPM
Output Rotation	CCW-CW
Ratio of Transmission	1:1
Through the Diameter	D200
Chucking Range	BT40
Tapping	
Torque	100.Nm
WT	18 kg
Inventory	Stock
Custom	Customization

Specifications and dimensions are for reference only and subject to change without notice. Please confirm the latest specifications before ordering.

BT40QD13Q30°

1. The shell is made of 40Cr, through aging treatment, precision processing, with high rigidity, high precision, long life and other characteristics. The minimum pass allowed Phi D130
2. The main drive shaft is made of special alloy material, processed by precise heat treatment process, and finally finely ground and formed to achieve high transmission stability.
3. Gear wheel bearings are imported to ensure the transmission of high torque, low noise.
4. Input and output forms are diverse and flexible, not limited to BT or ER interface, can meet all kinds of precision machining equipment, can be used for milling,drilling, tapping, grinding and other processes of processing.

Shank with

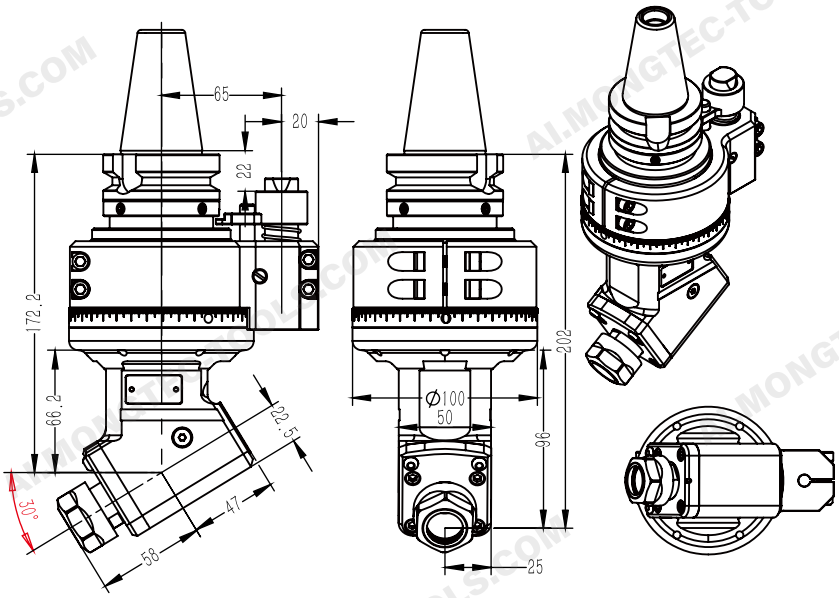

PARAMETERS

Model	BT40QD13Q30°
Driving Shank	BT40/HSK63/NT40/CAT40
More Shank	Can Be Used
Max. RPM	4500 RPM
Output Rotation	CW-CW
Ratio of Transmission	1:1
Through the Diameter	D130
Chucking Range	D1-D13
Tapping	M6-M12
Torque	35.Nm
WT	4.951 kg
Inventory	
Custom	Customization

Specifications and dimensions are for reference only and subject to change without notice. Please confirm the latest specifications before ordering.

DK45 BT40QER25Q45°

1. The shell is made of 40Cr, through aging treatment, precision processing, with high rigidity, high precision, long life and other characteristics. The minimum pass allowed Phi D115
2. The main drive shaft is made of special alloy material, processed by precise heat treatment process, and finally finely ground and formed to achieve high transmission stability.
3. Gear wheel bearings are imported to ensure the transmission of high torque, low noise.
4. Input and output forms are diverse and flexible, not limited to BT or ER interface, can meet all kinds of precision machining equipment, can be used for milling,drilling, tapping, grinding and other processes of processing.

Shank with

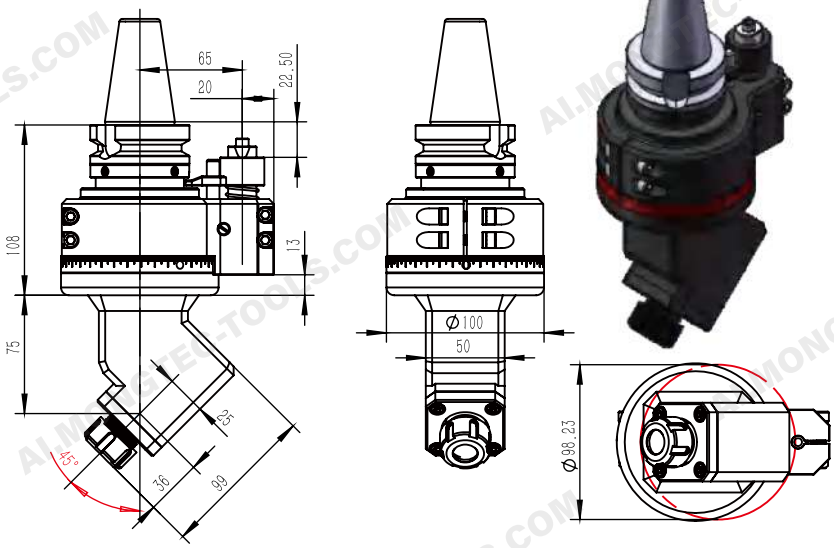

PARAMETERS

Model	DK45QBT40QER25Q45°
Driving Shank	BT40/HSK63/NT40
More Shank	Can Be Used
Max. RPM	7500 RPM
Output Rotation	CW-CW
Ratio of Transmission	1:1
Through the Diameter	D115
Chucking Range	D1-D16
Tapping	M6-M14
Torque	46.Nm
WT	5.3 kg
Inventory	Stock
Custom	Customization

Specifications and dimensions are for reference only and subject to change without notice. Please confirm the latest specifications before ordering.

DK45 BT40QER25Q45°

1. The shell is made of 40Cr, through aging treatment, precision processing, with high rigidity, high precision, long life and other characteristics. The minimum pass allowed Phi D115
2. The main drive shaft is made of special alloy material, processed by precise heat treatment process, and finally finely ground and formed to achieve high transmission stability.
3. Gear wheel bearings are imported to ensure the transmission of high torque, low noise.
4. Input and output forms are diverse and flexible, not limited to BT or ER interface, can meet all kinds of precision machining equipment, can be used for milling,drilling, tapping, grinding and other processes of processing.

Shank with

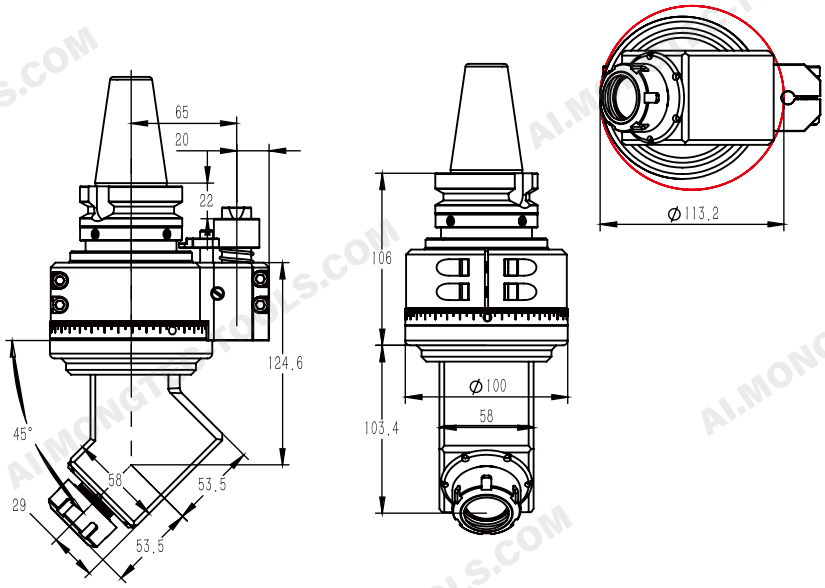

PARAMETERS

Model	DK45QBT40QER25Q45°
Driving Shank	BT40/HSK63/NT40
More Shank	Can Be Used
Max. RPM	7500 RPM
Output Rotation	CW-CW
Ratio of Transmission	1:1
Through the Diameter	D115
Chucking Range	D1-D16
Tapping	M6-M14
Torque	46.Nm
WT	5.3 kg
Inventory	Stock
Custom	Customization

Specifications and dimensions are for reference only and subject to change without notice. Please confirm the latest specifications before ordering.

BT40QZ10QL50

1. The shell is made of 40Cr, through aging treatment, precision machining, with high rigidity, high precision, long life and other characteristics. The minimum pass allowed Phi D100
2. The main drive shaft is made of special alloy material, processed by strict heat treatment process, and finally finely ground to achieve high transmission stability.
3. Gear wheel bearings are imported to ensure the transmission of high torque, low noise.
4. Input and output forms are diverse and flexible, not limited to BT or ER interface, can meet all kinds of precision machining equipment, can be used for milling,drilling, tapping, grinding and other processes of processing.

Shank with

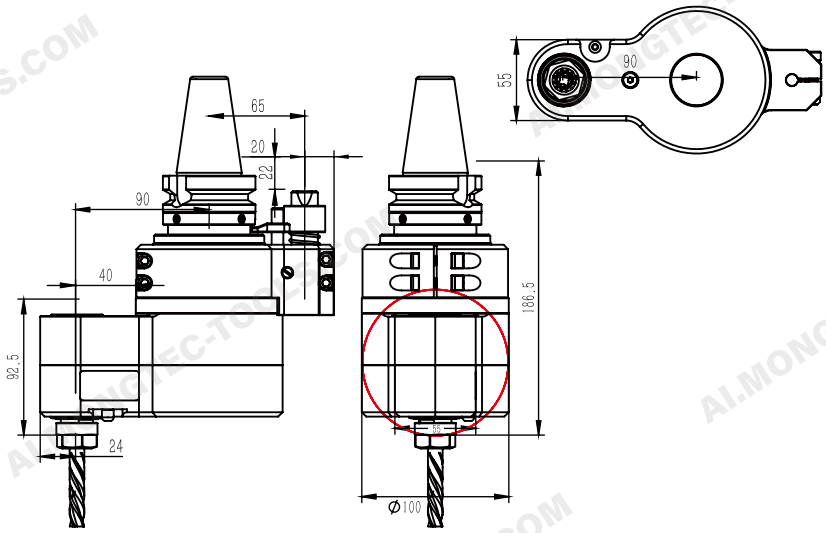

PARAMETERS

Model	BT40QZ10QL50
Driving Shank	BT40
More Shank	Can Be Used
Max. RPM	6000 RPM
Output Rotation	CW-CW
Ratio of Transmission	1:1.5 Speed Increase
Through the Diameter	D100
Chucking Range	D1-D10
Tapping	M6-M8
Torque	18.5 NM
WT	6.5 KG
Inventory	Stock
Custom	Customization

Specifications and dimensions are for reference only and subject to change without notice. Please confirm the latest specifications before ordering.

BT50Q55°

1. The shell is made of 40Cr, through aging treatment, precision processing, with high rigidity, high precision, long life and other characteristics. The minimum pass allowed Phi D95
2. The main drive shaft is made of special alloy material, processed by precise heat treatment process, and finally finely ground and formed to achieve high transmission stability.
3. Gear wheel bearings are imported to ensure the transmission of high torque, low noise.
4. Input and output forms are diverse and flexible, not limited to BT or ER interface, can meet all kinds of precision machining equipment, can be used for milling,drilling, tapping, grinding and other processes of processing.

Shank with

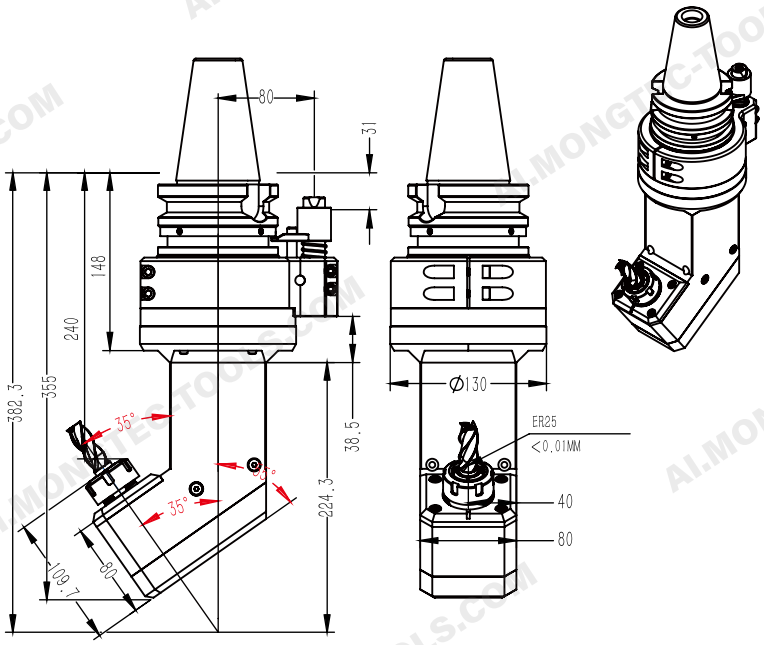

PARAMETERS

Model	BT50Q55°
Driving Shank	BT50
More Shank	Can Be Used
Max. RPM	7500 RPM
Output Rotation	CW-CW
Ratio of Transmission	1:1
Through the Diameter	D95
Chucking Range	D1-D16
Tapping	M6-M14
Torque	46.Nm
WT	12.8 kg
Inventory	
Custom	Customization

Specifications and dimensions are for reference only and subject to change without notice. Please confirm the latest specifications before ordering.

BT50QZ10QL80QH150

1. The shell is made of 40Cr, through aging treatment, precision machining, with high rigidity, high precision, long life and other characteristics. The minimum pass allowed Phi 213.5mm
2. The main drive shaft is made of special alloy material, processed by strict heat treatment process, and finally finely ground to achieve high transmission stability.
3. Gear wheel bearings are imported to ensure the transmission of high torque, low noise.
4. Input and output forms are diverse and flexible, not limited to BT or ER interface,can meet all kinds of precision machining equipment, can be used for milling,drilling, tapping, grinding and other processes of processing.

Shank with

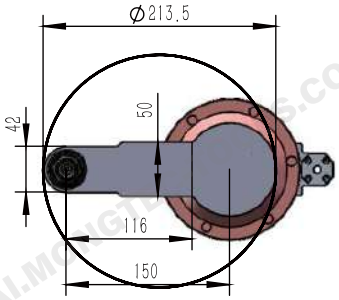

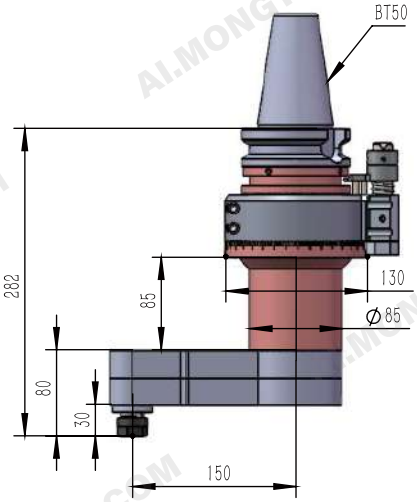

PARAMETERS

Model	BT50QZ10QL80QH150
Driving Shank	BT50
More Shank	Can Be Used
Max. RPM	5500 RPM
Output Rotation	CW-CW
Ratio of Transmission	1:1
Through the Diameter	213.5m m
Chucking Range	10mm
Tapping	M10
Torque	22. Nm
WT	14 KG
Inventory	Stock
Custom	Customization

Specifications and dimensions are for reference only and subject to change without notice. Please confirm the latest specifications before ordering.

BT50QD48

Reverse of caliper

1. The shell is made of 40Cr, through aging treatment, precision processing, with high rigidity, high precision, long life and other characteristics. The minimum pass allowed Phi D63
2. The main drive shaft is made of special alloy material, processed by precise heat treatment process, and finally finely ground and formed to achieve high transmission stability.
3. Gear wheel bearings are imported to ensure the transmission of high torque, low noise.
4. Input and output forms are diverse and flexible, not limited to BT or ER interface, can meet all kinds of precision machining equipment, can be used for milling,drilling, tapping, grinding and other processes of processing.

Shank with

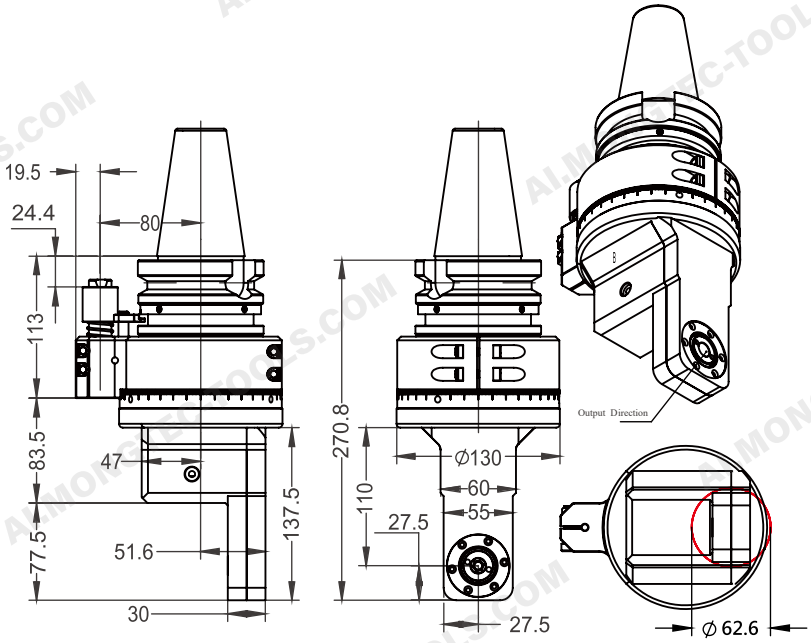

PARAMETERS

Model	BT50QD48 /Reverse Of Caliper
Driving Shank	BT50
More Shank	Can Be Used
Max. RPM	2000 RPM
Output Rotation	CW-CW
Ratio of Transmission	1:1
Through the Diameter	D63
Chucking Range	D12
Tapping	
Torque	35.Nm
WT	12.337 kg
Inventory	
Custom	Customization

Specifications and dimensions are for reference only and subject to change without notice. Please confirm the latest specifications before ordering.

BT50QD48

Forward Turning Calipers

1. The shell is made of 40Cr, through aging treatment, precision machining, with high rigidity, high precision, long life and other characteristics. The minimum pass allowed Phi D63
2. The main drive shaft is made of special alloy material, processed by strict heat treatment process, and finally finely ground to achieve high transmission stability.
3. Gear wheel bearings are imported to ensure the transmission of high torque, low noise.
4. Input and output forms are diverse and flexible, not limited to BT or ER interface,can meet all kinds of precision machining equipment, can be used for milling,drilling, tapping, grinding and other processes of processing.

Shank with

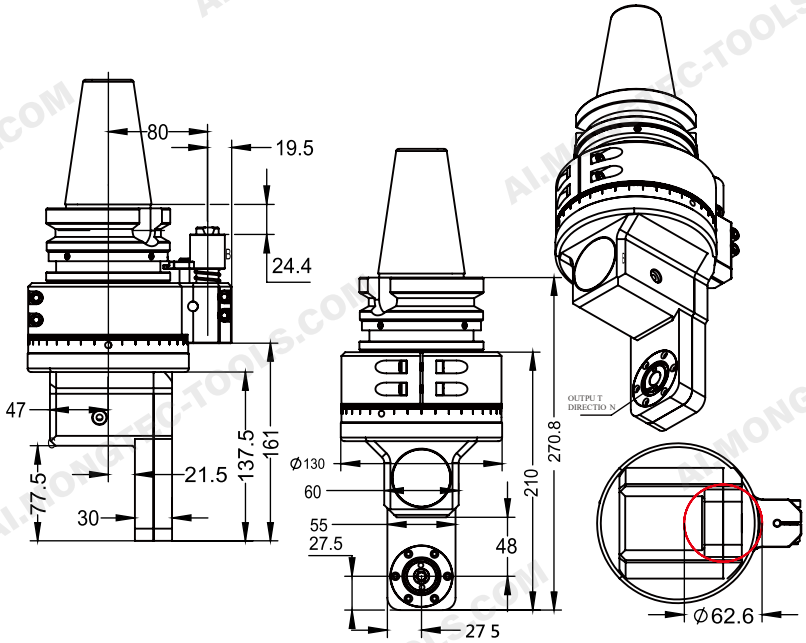

PARAMETERS

Model	BT50QD48 /Forward Turning Calipers
Driving Shank	BT50
More Shank	Can Be Used
Max. RPM	2000 RPM
Output Rotation	CW-CW
Ratio of Transmission	1:1
Through the Diameter	D63
Chucking Range	D12
Tapping	
Torque	35. Nm
WT	12.367 KG
Inventory	Stock
Custom	Customization

Specifications and dimensions are for reference only and subject to change without notice. Please confirm the latest specifications before ordering.

BT40QAER25M

1. The shell is made of aviation aluminum, through aging treatment, precision processing, with high rigidity, high precision, long life and other characteristics.The minimum pass allowed Phi D95
2. The main drive shaft is made of special alloy material, processed by precise heat treatment process, and finally finely ground and formed to achieve high transmission stability.
3. Gear wheel bearings are imported to ensure the transmission of high torque, low noise.
4. Input and output forms are diverse and flexible, not limited to BT or ER interface,can meet all kinds of precision machining equipment, can be used for milling,drilling, tapping, grinding and other processes of processing.

Shank with

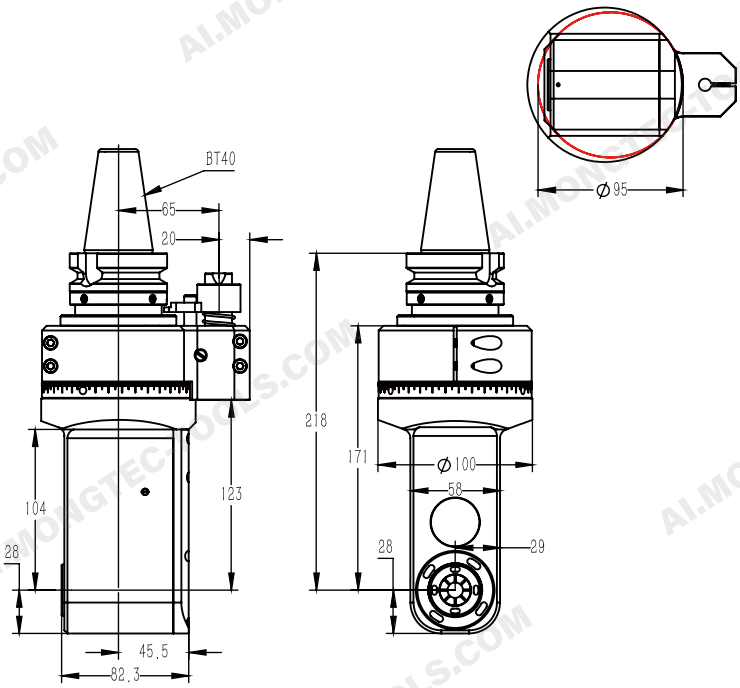

PARAMETERS

Model	BT40QAER25M
Driving Shank	BT40
More Shank	Can Be Used
Max. RPM	6000 RPM
Output Rotation	CW-CW
Ratio of Transmission	1:1
Through the Diameter	D95
Chucking Range	D1-D16
Tapping	M6-M14
Torque	46. Nm
WT	5.566 kg
Inventory	Stock
Custom	Customization

Specifications and dimensions are for reference only and subject to change without notice. Please confirm the latest specifications before ordering.

BT40QER25L

1. The shell is made of QT500Q7, through aging treatment, precision machining, with high rigidity, high precision, long life and other characteristics. The minimum pass allowed Phi D142
2. The main drive shaft is made of special alloy material, processed by strict heat treatment process, and finally finely ground to achieve high transmission stability.
3. Gear wheel bearings are imported to ensure the transmission of high torque, low noise.
4. Input and output forms are diverse and flexible, not limited to BT or ER interface,can meet all kinds of precision machining equipment, can be used for milling,drilling, tapping, grinding and other processes of processing.

Shank with

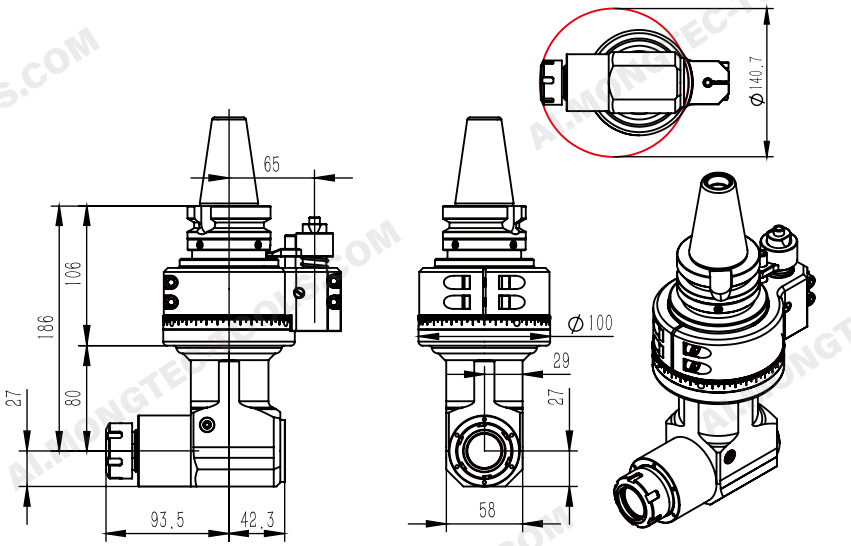

PARAMETERS

Model	BT40QER25L
Driving Shank	BT40
More Shank	Can Be Used
Max. RPM	6000 RPM
Output Rotation	CW-CW
Ratio of Transmission	1:1
Through the Diameter	D142
Chucking Range	D1-D16
Tapping	M6-M14
Torque	46. Nm
WT	6.679 KG
Inventory	Stock
Custom	Customization

Specifications and dimensions are for reference only and subject to change without notice. Please confirm the latest specifications before ordering.

BT40QFMB22MQF63

1. The shell is made of aviation aluminum, through aging treatment, precision processing, with high rigidity, high precision, long life and other characteristics. The minimum pass allowed Phi D100
2. The main drive shaft is made of special alloy material, processed by precise heat treatment process, and finally finely ground and formed to achieve high transmission stability.
3. Gear wheel bearings are imported to ensure the transmission of high torque, low noise.
4. Input and output forms are diverse and flexible, not limited to BT or ER interface,can meet all kinds of precision machining equipment, can be used for milling,drilling, tapping, grinding and other processes of processing.

Shank with

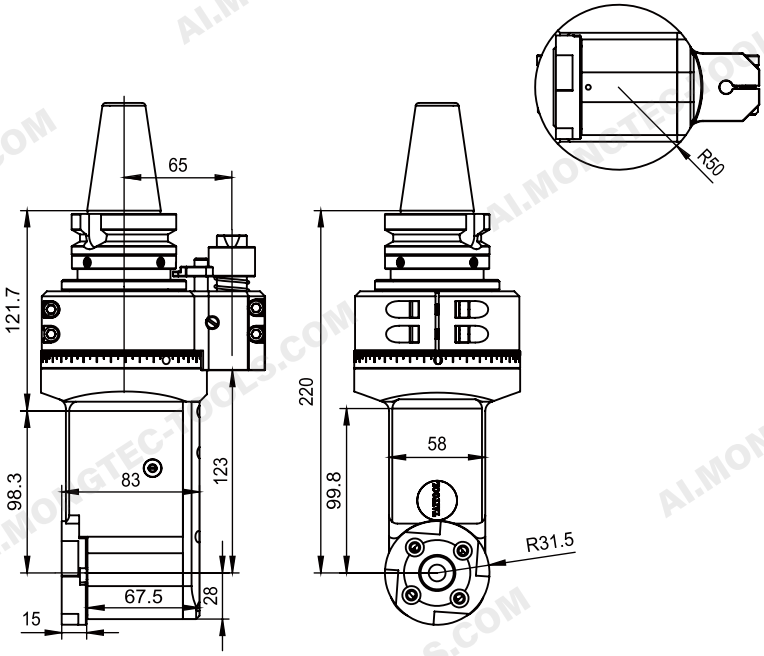

PARAMETERS

Model	BT40QFMB22MQF63
Driving Shank	BT40
More Shank	Can Be Used
Max. RPM	3500 RPM
Output Rotation	CW-CW
Ratio of Transmission	1:1
Through the Diameter	D100
Chucking Range	D22
Tapping	F63
Torque	46. Nm
WT	5.653 kg
Inventory	Stock
Custom	Customization

Specifications and dimensions are for reference only and subject to change without notice. Please confirm the latest specifications before ordering.

BT50QFMB22M

1. The shell is made of aviation aluminum, through aging treatment, precision machining, with high rigidity, high precision, long life and other characteristics. The minimum pass allowed Phi D108
2. The main drive shaft is made of special alloy material, processed by strict heat treatment process, and finally finely ground to achieve high transmission stability.
3. Gear wheel bearings are imported to ensure the transmission of high torque, low noise.
4. Input and output forms are diverse and flexible, not limited to BT or ER interface,can meet all kinds of precision machining equipment, can be used for milling,drilling, tapping, grinding and other processes of processing.

Shank with

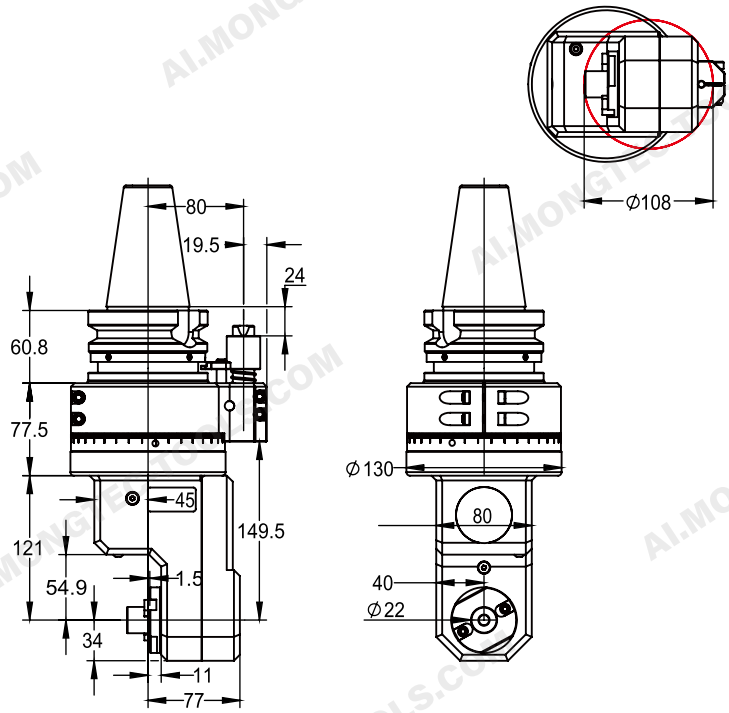

PARAMETERS

Model	BT50QFMB22M
Driving Shank	BT50
More Shank	Can Be Used
Max. RPM	4000 RPM
Output Rotation	CW-CW
Ratio of Transmission	1:1
Through the Diameter	D108
Chucking Range	FMB22M
Tapping	F63
Torque	65. Nm
WT	15.6 KG
Inventory	Stock
Custom	Customization

Specifications and dimensions are for reference only and subject to change without notice. Please confirm the latest specifications before ordering.

BT40QD30Q001

1. The shell is made of 40Cr, through aging treatment, precision processing, with high rigidity, high precision, long life and other characteristics. The minimum pass allowed Phi D65
2. The main drive shaft is made of special alloy material, processed by precise heat treatment process, and finally finely ground and formed to achieve high transmission stability.
3. Gear wheel bearings are imported to ensure the transmission of high torque, low noise.
4. Input and output forms are diverse and flexible, not limited to BT or ER interface, can meet all kinds of precision machining equipment, can be used for milling,drilling, tapping, grinding and other processes of processing.

Shank with

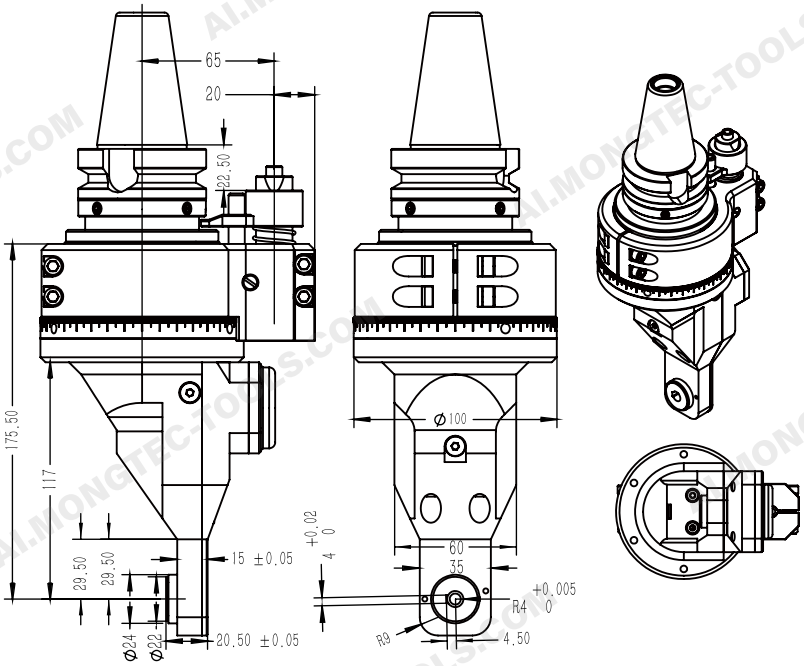

PARAMETERS

Model	BT40QD30Q001
Driving Shank	BT40
More Shank	Can Be Used
Max. RPM	6000 RPM
Output Rotation	CW-CW
Ratio of Transmission	1:1.5
Through the Diameter	D65
Chucking Range	D8
Method of cooling	Cooling In Outside
Torque	18. Nm
WT	5.8 kg
Inventory	Stock
Custom	Customization

Specifications and dimensions are for reference only and subject to change without notice. Please confirm the latest specifications before ordering.

BT40QD30Q002

1. The shell is made of 40Cr, through aging treatment, precision machining, with high rigidity, high precision, long life and other characteristics. The minimum pass allowed Phi D65
2. The main drive shaft is made of special alloy material, processed by strict heat treatment process, and finally finely ground to achieve high transmission stability.
3. Gear wheel bearings are imported to ensure the transmission of high torque, low noise.
4. Input and output forms are diverse and flexible, not limited to BT or ER interface,can meet all kinds of precision machining equipment, can be used for milling,drilling, tapping, grinding and other processes of processing.

Shank with

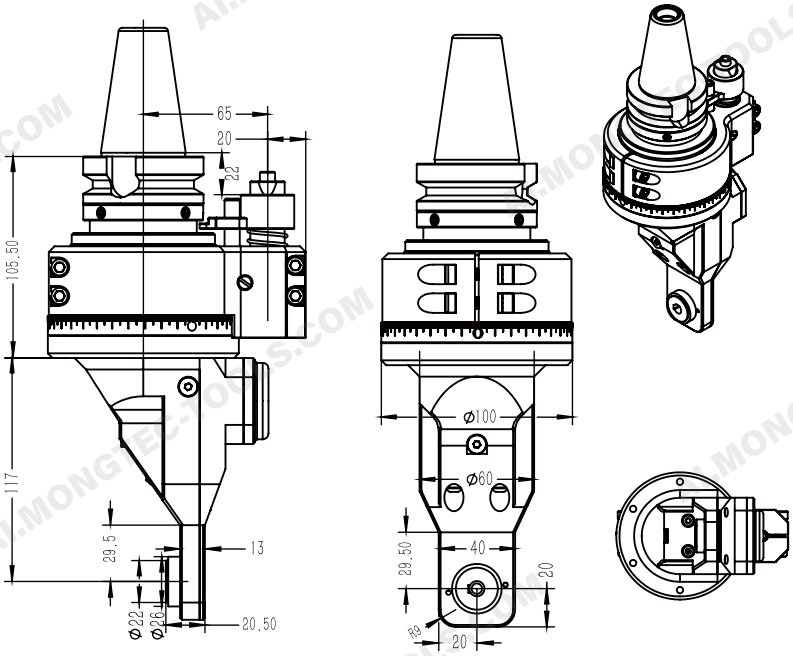

PARAMETERS

Model	BT40QD30Q002/ Boring
Driving Shank	BT40
More Shank	Can Be Used
Max. RPM	6000 RPM
Output Rotation	CW-CW
Ratio of Transmission	1:1.5
Through the Diameter	D65
Chucking Range	D8
Method of cooling	Cooling In Outside
Torque	18. Nm
WT	5.8 KG
Inventory	Stock
Custom	Customization

Specifications and dimensions are for reference only and subject to change without notice. Please confirm the latest specifications before ordering.

BT40QD30Q003

1. The shell is made of 40Cr, through aging treatment, precision processing, withhigh rigidity, high precision, long life and other characteristics. The minimum pass allowed Phi D65
2. The main drive shaft is made of special alloy material, processed by precise heat treatment process, and finally finely ground and formed to achieve high transmission stability.
3. Gear wheel bearings are imported to ensure the transmission of high torque, low noise.
4. Input and output forms are diverse and flexible, not limited to BT or ER interface,can meet all kinds of precision machining equipment, can be used for milling,drilling, tapping, grinding and other processes of processing.

Shank with

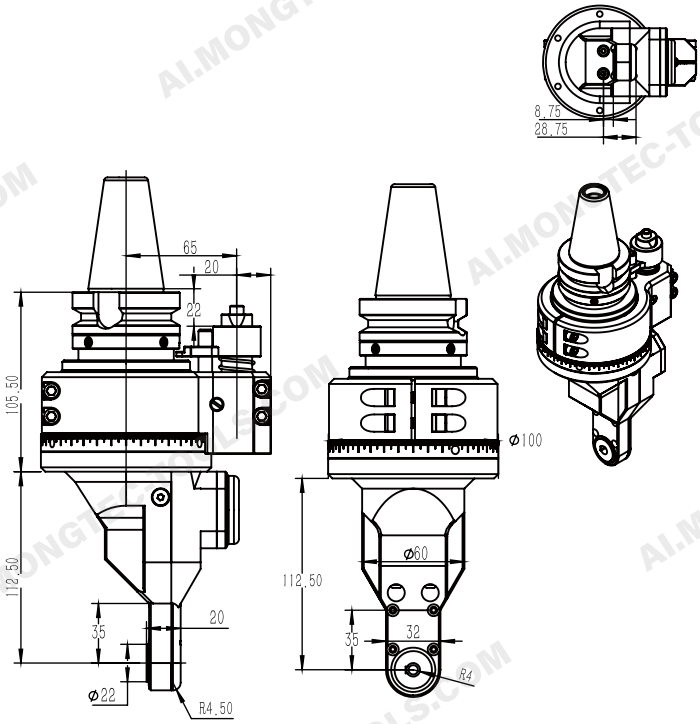

PARAMETERS

Model	BT40QD30Q003/ Surface Milling
Driving Shank	BT40
More Shank	Can Be Used
Max. RPM	5000 RPM
Output Rotation	CW-CW
Ratio of Transmission	1:1.6875
Through the Diameter	D65
Chucking Range	D8
Method of cooling	Cooling In Outside
Torque	18. Nm
WT	5.8 kg
Inventory	Stock
Custom	Customization

Specifications and dimensions are for reference only and subject to change without notice. Please confirm the latest specifications before ordering.

BT40QF25Q2X

1. The shell is made of 40Cr, through aging treatment, precision machining, with high rigidity, high precision, long life and other characteristics. The minimum pass allowed Phi 26*58
2. The main drive shaft is made of special alloy material, processed by strict heat treatment process, and finally finely ground to achieve high transmission stability.
3. Gear wheel bearings are imported to ensure the transmission of high torque, low noise.
4. Input and output forms are diverse and flexible, not limited to BT or ER interface,can meet all kinds of precision machining equipment, can be used for milling,drilling, tapping, grinding and other processes of processing.

Shank with

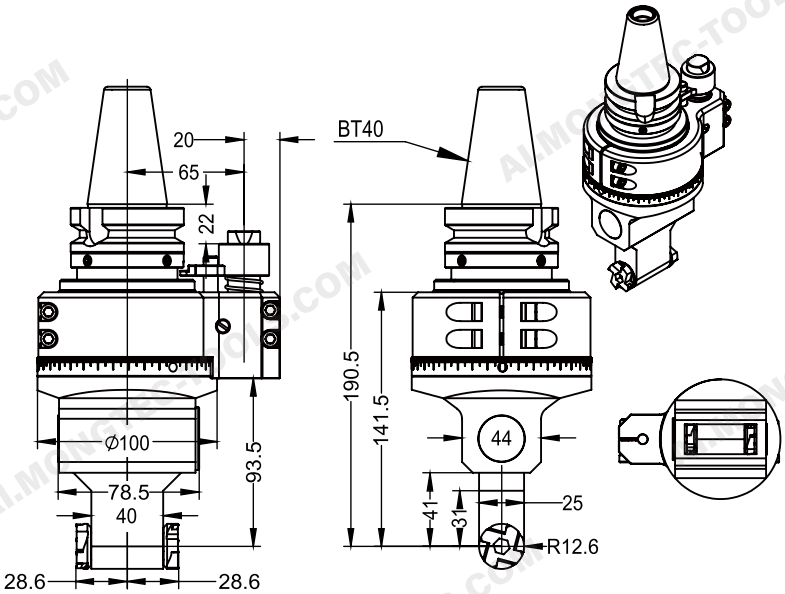

PARAMETERS

Model	BT40QF25Q2X
Driving Shank	BT40
More Shank	Can Be Used
Max. RPM	6000 RPM
Output Rotation	CW-CW
Ratio of Transmission	1:1
Through the Diameter	26*58
Chucking Range	D10
Tapping	
Torque	26. Nm
WT	4.880 KG
Inventory	Stock
Custom	Customization

Specifications and dimensions are for reference only and subject to change without notice. Please confirm the latest specifications before ordering.

BT50QFMB22M

1. The shell is made of aviation aluminum, through aging treatment, precision processing, with high rigidity, high precision, long life and other characteristics. The minimum pass allowed Phi D108
2. The main drive shaft is made of special alloy material, processed by precise heat treatment process, and finally finely ground and formed to achieve high transmission stability.
3. Gear wheel bearings are imported to ensure the transmission of high torque, low noise.
4. Input and output forms are diverse and flexible, not limited to BT or ER interface, can meet all kinds of precision machining equipment, can be used for milling,drilling, tapping, grinding and other processes of processing.

Shank with

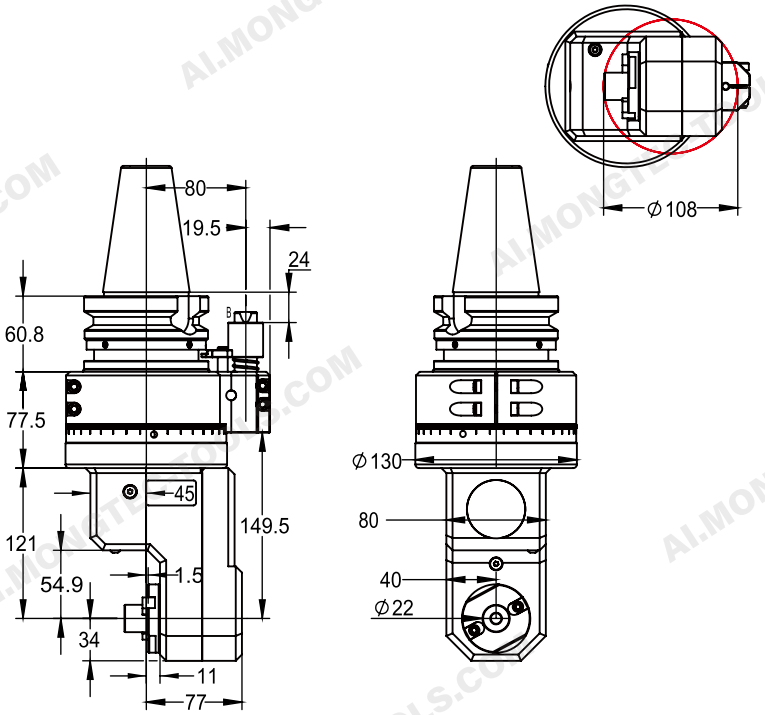

PARAMETERS

Model	BT50QFMB22M
Driving Shank	BT50
More Shank	Can Be Used
Max. RPM	4000 RPM
Output Rotation	CW-CW
Ratio of Transmission	1:1
Through the Diameter	D108
Chucking Range	FMB22
Tapping	F63
Torque	65. Nm
WT	15.6 kg
Inventory	Stock
Custom	Customization

Specifications and dimensions are for reference only and subject to change without notice. Please confirm the latest specifications before ordering.

BT50QPER16

1. The shell is made of 40Cr, through aging treatment, precision machining, with high rigidity, high precision, long life and other characteristics. The minimum pass allowed Phi D51
2. The main drive shaft is made of special alloy material, processed by strict heat treatment process, and finally finely ground to achieve high transmission stability.
3. Gear wheel bearings are imported to ensure the transmission of high torque, low noise.
4. Input and output forms are diverse and flexible, not limited to BT or ER interface,can meet all kinds of precision machining equipment, can be used for milling,drilling, tapping, grinding and other processes of processing.

Shank with

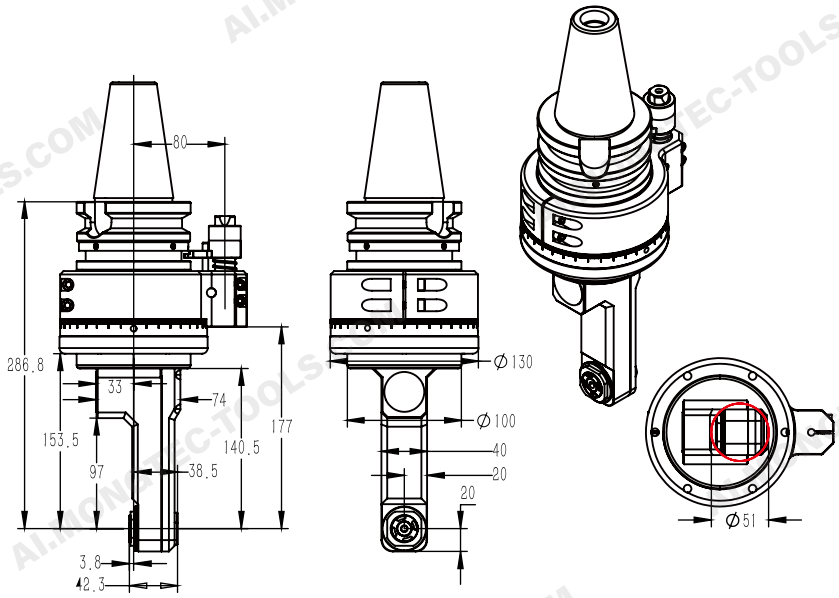

PARAMETERS

Model	BT50QPER16
Driving Shank	BT50
More Shank	Can Be Used
Max. RPM	6000 RPM
Output Rotation	CW-CW
Ratio of Transmission	1:1
Through the Diameter	D51
Chucking Range	D1-D10
Tapping	Milling
Torque	18. Nm
WT	10.074 kg
Inventory	Stock
Custom	Customization

Specifications and dimensions are for reference only and subject to change without notice. Please confirm the latest specifications before ordering.

Facebook WeChat YouTube Mongtec Web LINE WhatsApp

Mongtec Precision Inc.

TEL : +886-4-22653360

FAX : +886-4-22653386

E-mail : info@mongtec.com

No. 87, Sec. 1, Daqing St., South Dist., Taichung City 402024, Taiwan (R.O.C.)