MONGTEC®
CNC職人のこだわり
MONGTEC-TOOLS.COM

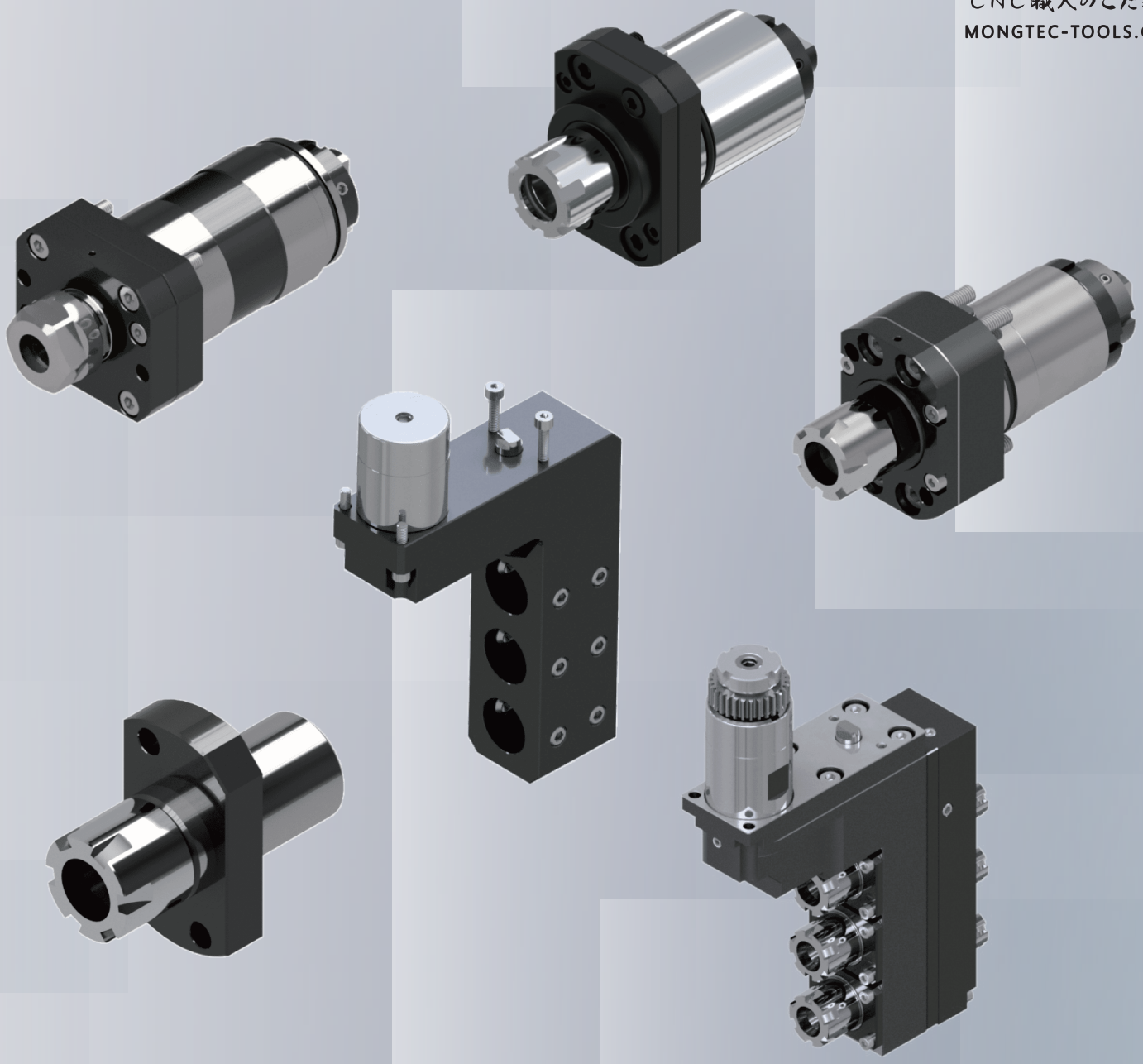

Mongtec
Swiss Type Toolholders

mongtec | mongtec-tools.com | ai.mongtec-tools.com | info@mongtec.com

Axial toolholders

PRECISION TSUGAMI

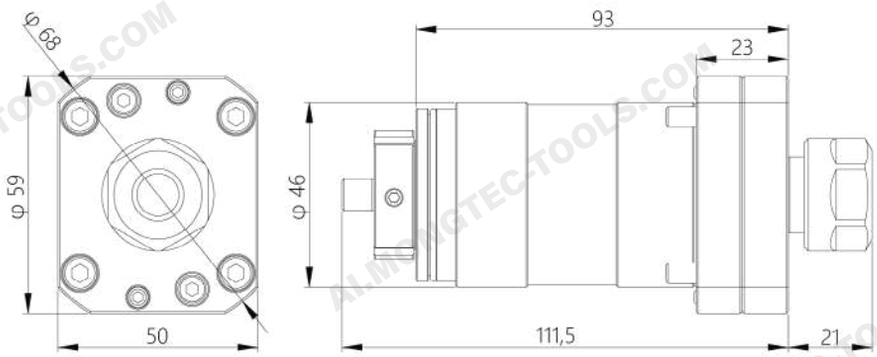

Max tool shank	Shank diameter	Ratio	Maximum speed	Collet	Model	TSUGAMI Code
10.0	46	1 : 1	6000rpm	ER16	3268-T051	3268-T051

Axial toolholders

PRECISION TSUGAMI

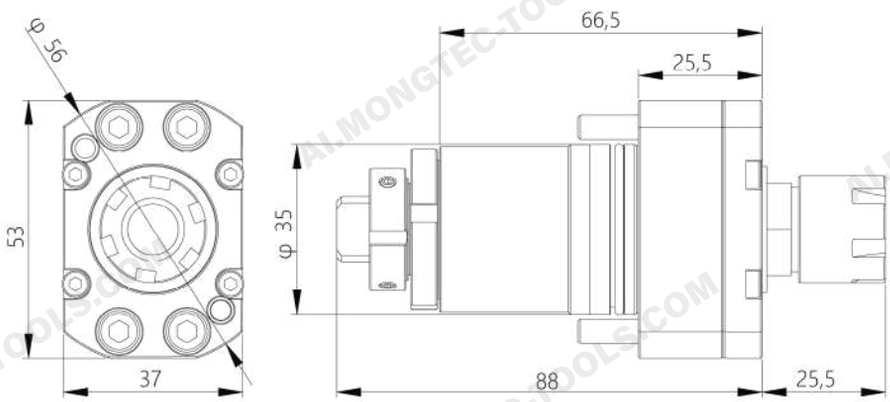

Max tool shank	Shank diameter	Ratio	Maximum speed	Collet	Model	TSUGAMI Code
10.0	35	1 : 1	8000rpm	ER16	3281-S080	3281-S080

Specifications and dimensions are for reference only and subject to change without notice. Please confirm the latest specifications before ordering.

Axial toolholders

PRECISION TSUGAMI

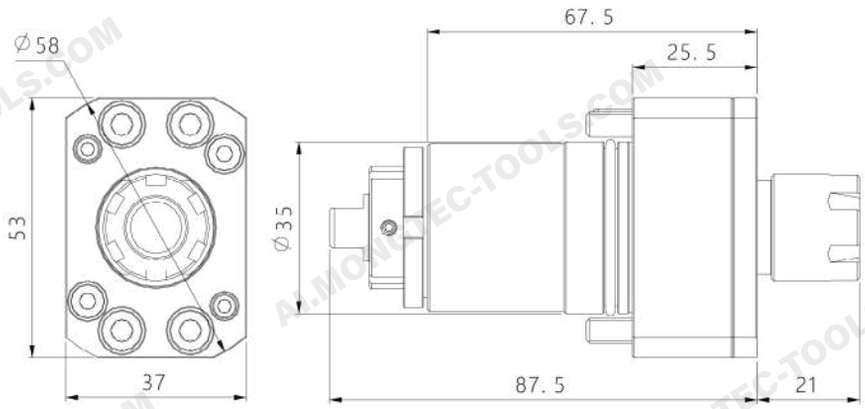

Max tool shank	Shank diameter	Ratio	Maximum speed	Collet	Model	TSUGAMI Code
10.0	35	1：1	8000rpm	ER16	3281-Z79098	3281-Z79098

Axial toolholders

PRECISION TSUGAMI

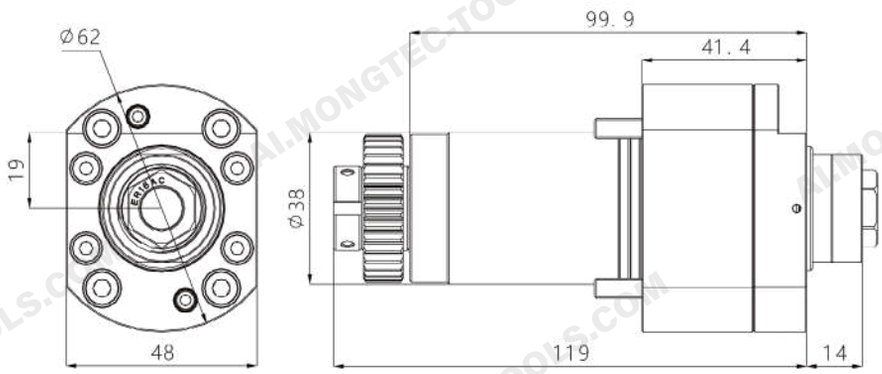

Max tool shank	Shank diameter	Ratio	Maximum speed	Collet	Model	TSUGAMI Code
10.0	38	1：1	6000rpm	ER16	3281-Z74045-0100	3281-Z74045-0100

Specifications and dimensions are for reference only and subject to change without notice. Please confirm the latest specifications before ordering.

Axial toolholders

PRECISION TSUGAMI

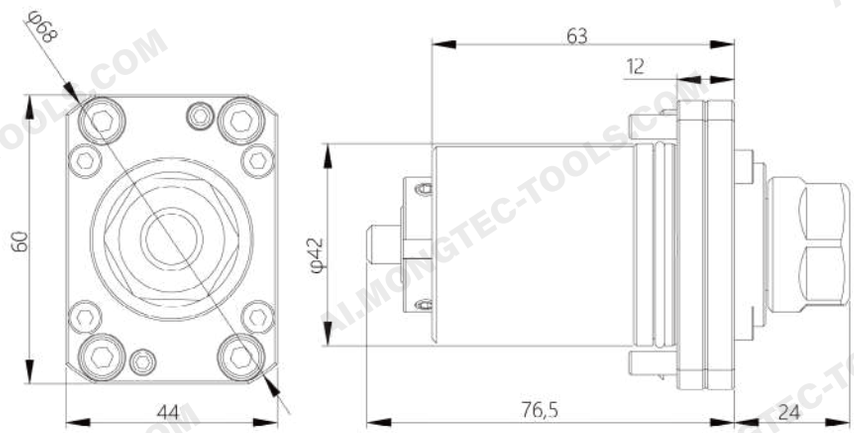

Max tool shank	Shank diameter	Ratio	Maximum speed	Collet	Model	TSUGAMI Code
10.0	42	1 : 1	6000rpm	ER16	3282-Y041	3282-Y041

Axial toolholders

PRECISION TSUGAMI

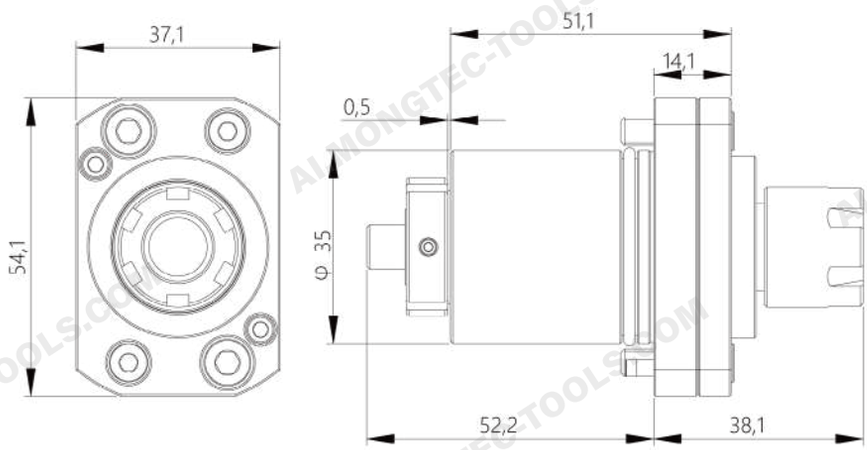

Max tool shank	Shank diameter	Ratio	Maximum speed	Collet	Model	TSUGAMI Code
10.0	35	1 : 1	6000rpm	ER16	3220-Y7072	3220-Y7072

Specifications and dimensions are for reference only and subject to change without notice. Please confirm the latest specifications before ordering.

Radial 4 spindles toolholders

PRECISION TSUGAMI

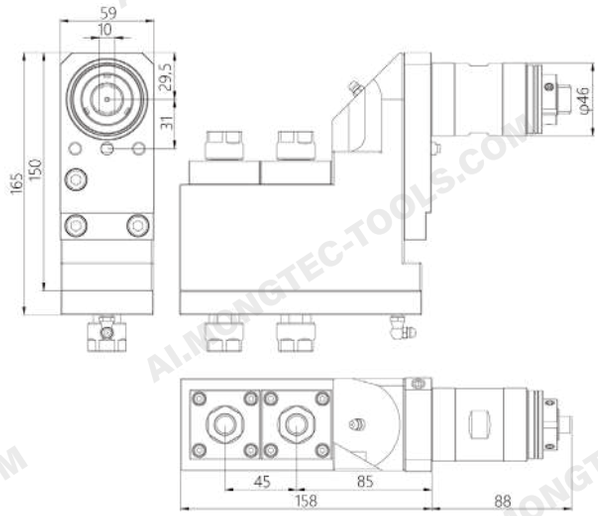

Max tool shank	Shank diameter	Ratio	Maximum speed	Collet	Model	TSUGAMI Code
10.0	46	1 : 1	6000rpm	ER16	3282-Y901	3282-Y901

Radial offset toolholders

PRECISION TSUGAMI

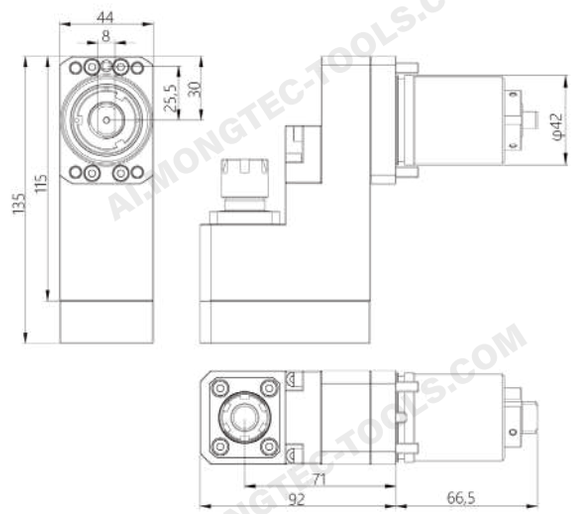

Max tool shank	Shank diameter	Ratio	Maximum speed	Collet	Model	TSUGAMI Code
10.0	42	1 : 1	6000rpm	ER16	3290-Y041	3290-Y041

Specifications and dimensions are for reference only and subject to change without notice. Please confirm the latest specifications before ordering.

Radial offset toolholders

PRECISION TSUGAMI

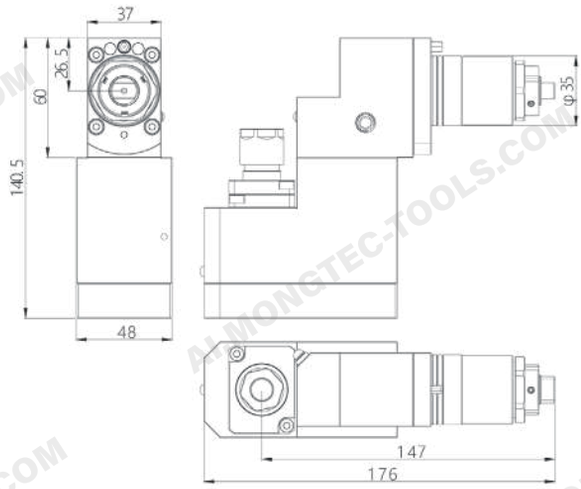

Max tool shank	Shank diameter	Ratio	Maximum speed	Collet	Model	TSUGAMI Code
10.0	35	1：1	8000rpm	ER16	3281-Y461-9010	3281-Y461-9010

Sleeves(internal coolant)

PRECISION TSUGAMI

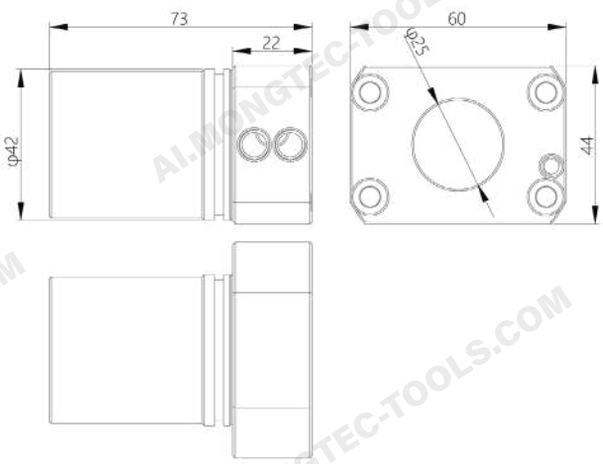

Max tool shank	Shank diameter	Ratio	Maximum speed	Collet	Model	TSUGAMI Code
25.0	42	-	-	-	3282-Y212	3282-Y212

Specifications and dimensions are for reference only and subject to change without notice. Please confirm the latest specifications before ordering.

Static drilling toolholders

PRECISION TSUGAMI

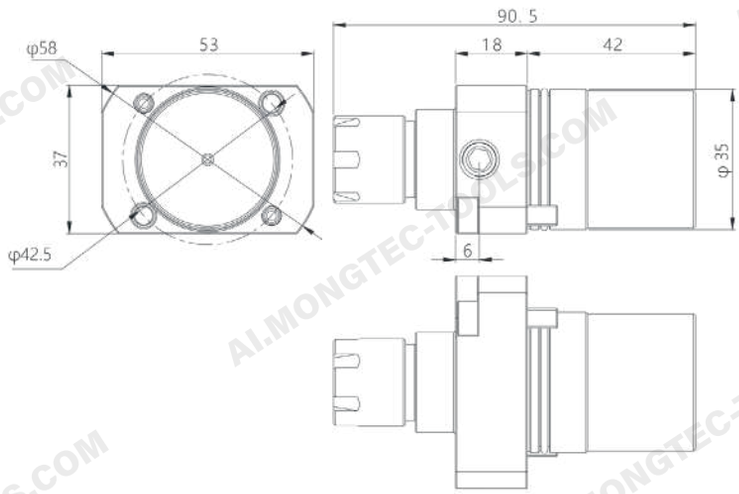

Max tool shank	Shank diameter	Ratio	Maximum speed	Collet	Model	TSUGAMI Code
10.0	35	-	-	ER16	3282-Z71051-9010	3282-Z71051-9010

Sleeves

PRECISION TSUGAMI

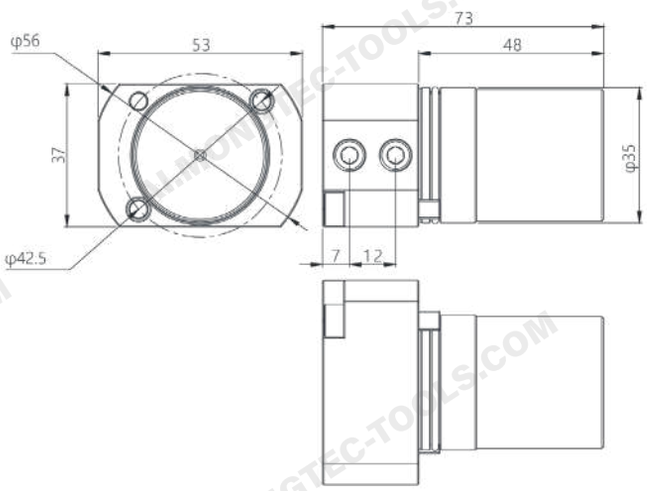

Max tool shank	Shank diameter	Ratio	Maximum speed	Collet	Model	TSUGAMI Code
20.0	35	-	-	-	3281-Z79055-0302	3281-Z79055-0302

Specifications and dimensions are for reference only and subject to change without notice. Please confirm the latest specifications before ordering.

Axial toolholders

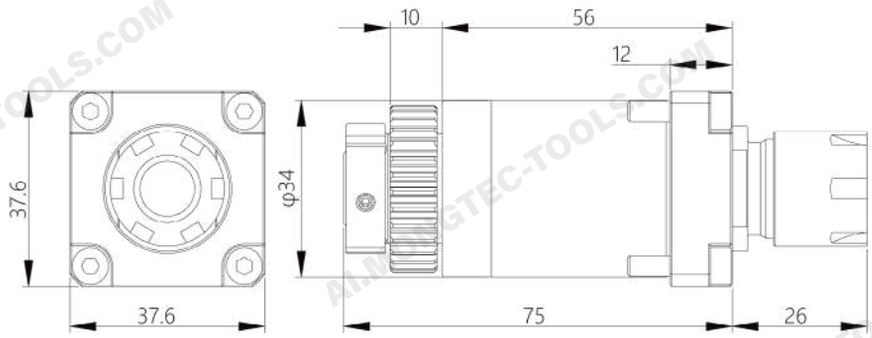

Max tool shank	Shank diameter	Ratio	Maximum speed	Collet	Model	STAR Code
10.0	34	1 : 1	8000rpm	ER16	33150	33150

Axial toolholders

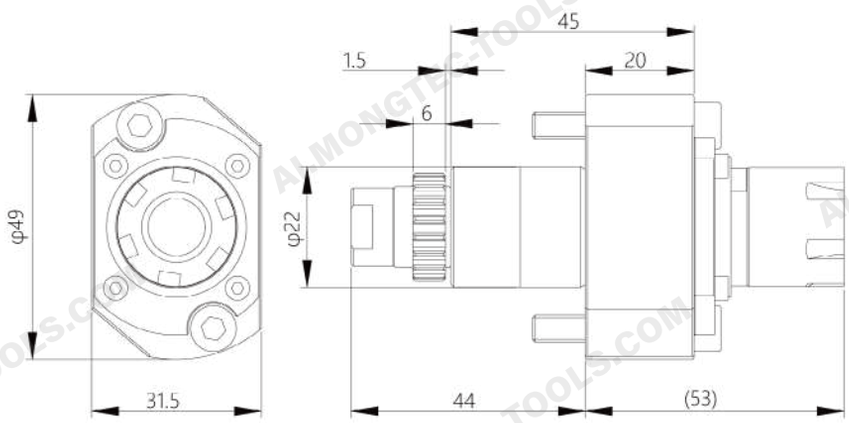

Max tool shank	Shank diameter	Ratio	Maximum speed	Collet	Model	STAR Code
10.0	22	1 : 1	6000rpm	ER16	57161	57161

Specifications and dimensions are for reference only and subject to change without notice. Please confirm the latest specifications before ordering.

Radial 3 spindles toolholders

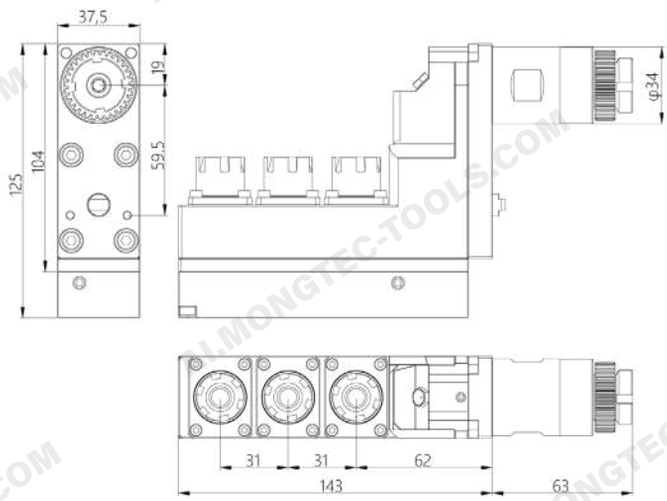

Max tool shank	Shank diameter	Ratio	Maximum speed	Collet	Model	STAR Code
10.0	34	1 : 1	6000rpm	ER16	66151	66151

Radial 6 spindles toolholders

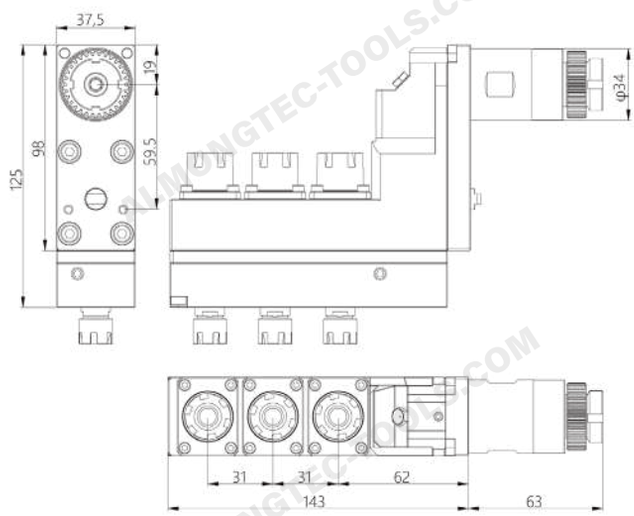

Max tool shank	Shank diameter	Ratio	Maximum speed	Collet	Model	STAR Code
10.0/7.0	34	1 : 1	6000rpm	ER16/ER11	67161	67161/OM155

Specifications and dimensions are for reference only and subject to change without notice. Please confirm the latest specifications before ordering.

Static drilling toolholders

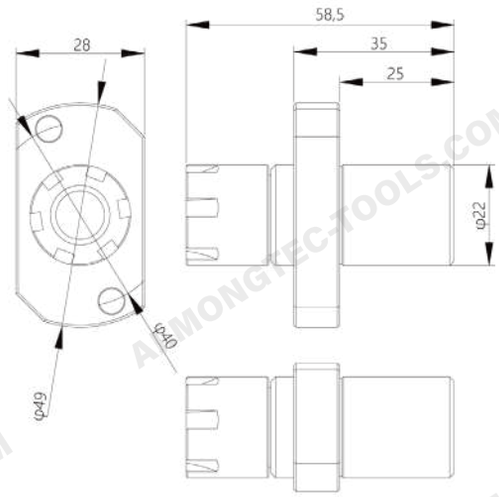

Max tool shank	Shank diameter	Ratio	Maximum speed	Collet	Model	STAR Code
10.0	22	-	-	ER16	54121-01	54121-01

Static drilling toolholders

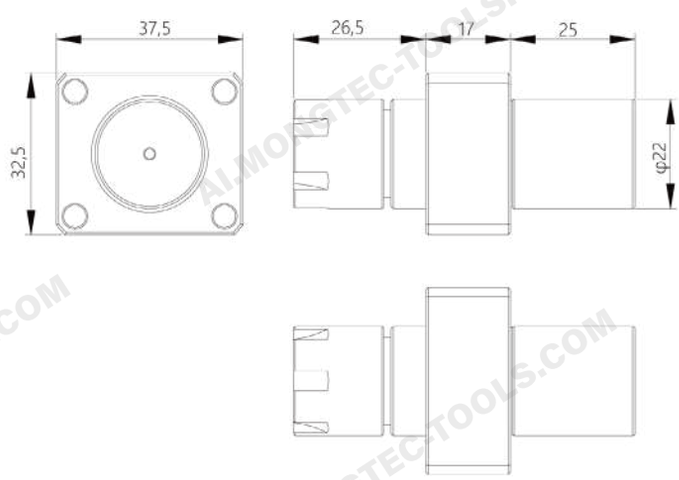

Max tool shank	Shank diameter	Ratio	Maximum speed	Collet	Model	STAR Code
10.0	22	-	-	ER16	0R122	0R122

Specifications and dimensions are for reference only and subject to change without notice. Please confirm the latest specifications before ordering.

Static drilling toolholders(Internal coolant)

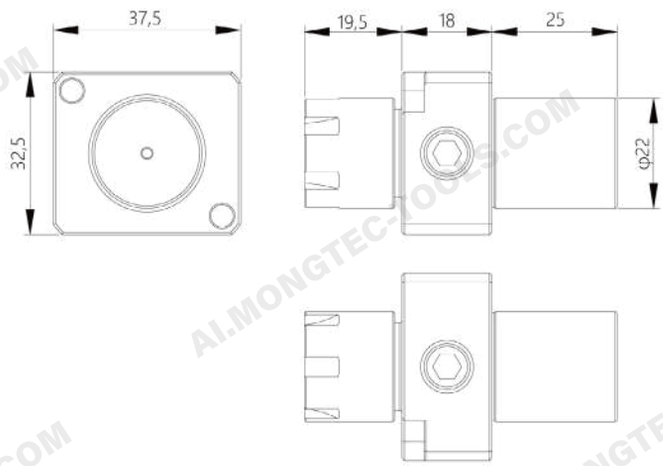

Max tool shank	Shank diameter	Ratio	Maximum speed	Collet	Model	STAR Code
10.0	22	-	-	ER16	0R123	0R123

Static drilling toolholders(Internal coolant)

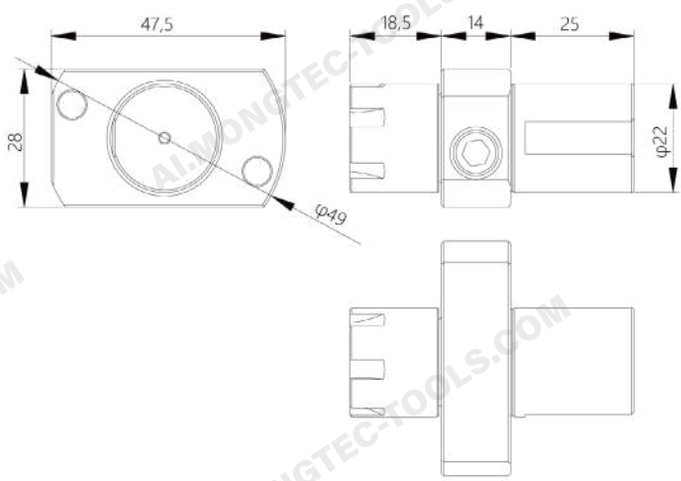

Max tool shank	Shank diameter	Ratio	Maximum speed	Collet	Model	STAR Code
10.0	22	-	-	ER16	67127	67127

Specifications and dimensions are for reference only and subject to change without notice. Please confirm the latest specifications before ordering.

Static drilling toolholders(Internal coolant)

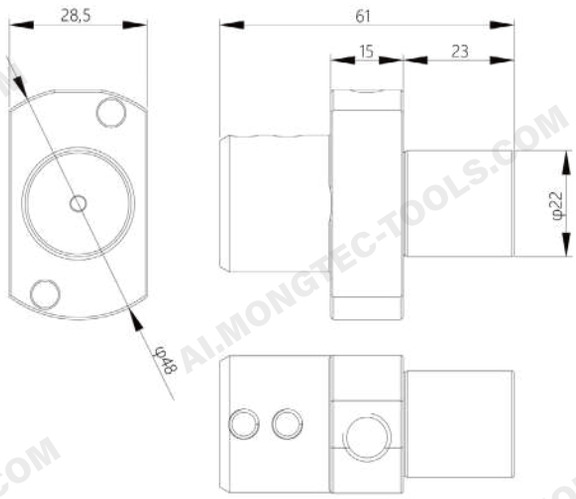

Max tool shank	Shank diameter	Ratio	Maximum speed	Collet	Model	STAR Code
6/8/10 /12/16	22	-	-	-	B2E22	B2E22

Static 3 toolholders

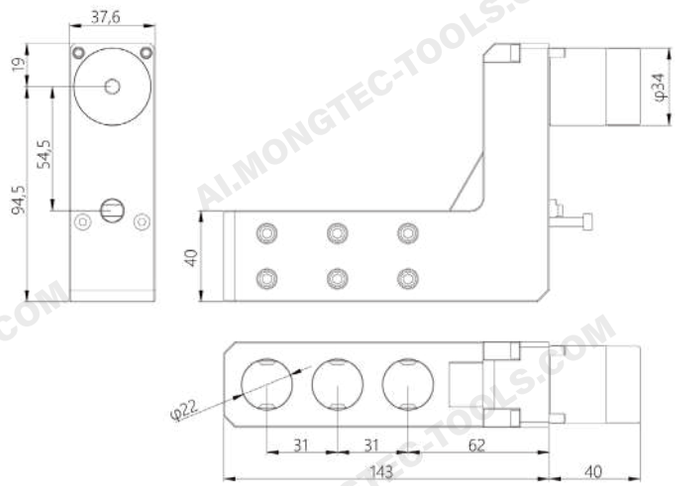

Max tool shank	Shank diameter	Ratio	Maximum speed	Collet	Model	STAR Code
22	34	-	-	-	STAR34322	STAR34322

Specifications and dimensions are for reference only and subject to change without notice. Please confirm the latest specifications before ordering.

Sleeves

CITIZEN

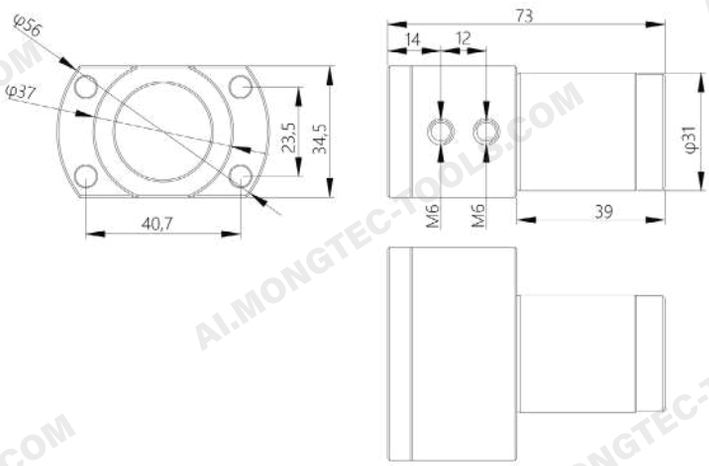

Max tool shank	Shank diameter	Ratio	Maximum speed	Collet	Model	CITIZEN Code
25.4	31	-	-	-	SAU825	SAU825

Static drilling toolholders(Internal coolant)

CITIZEN

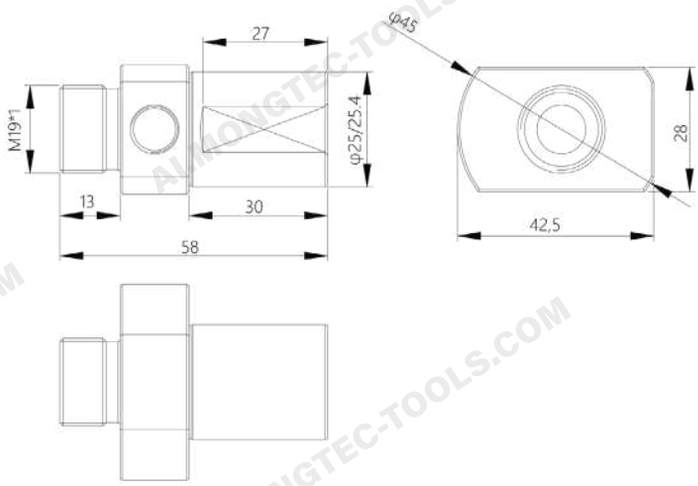

Max tool shank	Shank diameter	Ratio	Maximum speed	Collet	Model	CITIZEN Code
19.05	**25/25.4**	**-**	**-**	**-**	**GDE1025/ GDE10254**	**-**

Specifications and dimensions are for reference only and subject to change without notice. Please confirm the latest specifications before ordering.

Axial toolholders

CITIZEN

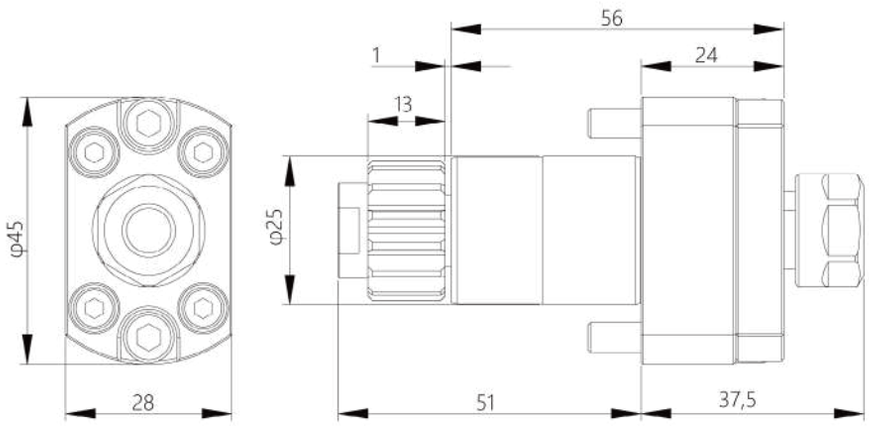

Max tool shank	Shank diameter	Ratio	Maximum speed	Collet	Model	CITIZEN Code
7.0	25	1 : 1	10000rpm	ER11	MSC507	MSC507

Static 4 holes drilling toolholders

CITIZEN

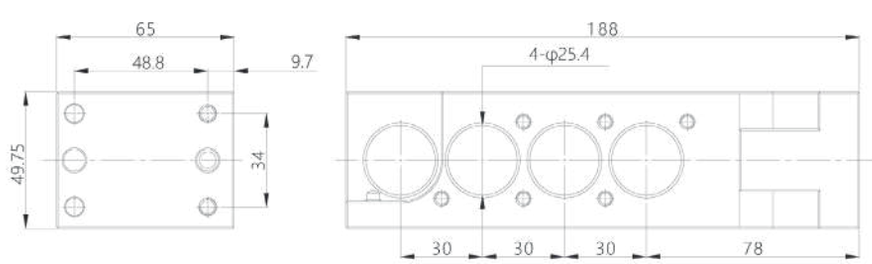

Max tool shank	Shank diameter	Ratio	Maximum speed	Collet	Model	CITIZEN Code
25.4	-	-	-	-	GDF1801	GDF1801

Specifications and dimensions are for reference only and subject to change without notice. Please confirm the latest specifications before ordering.

CITIZEN

Static 3 holes drilling toolholders

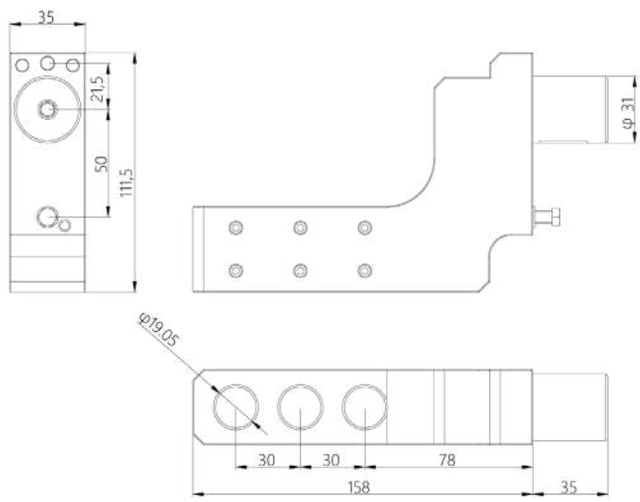

Max tool shank	Shank diameter	Ratio	Maximum speed	Collet	Model	CITIZEN Code
19.05	**31**	**-**	**-**	**-**	**GDF1207**	**GDF1207**

Specifications and dimensions are for reference only and subject to change without notice. Please confirm the latest specifications before ordering.

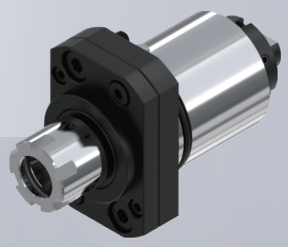
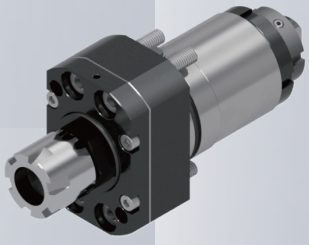
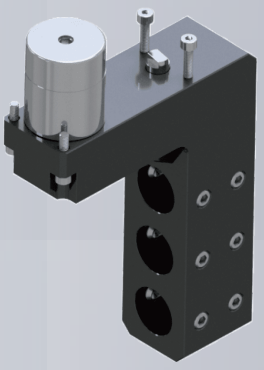
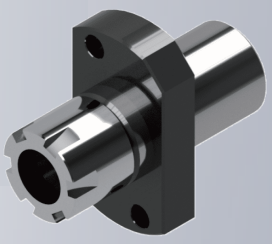
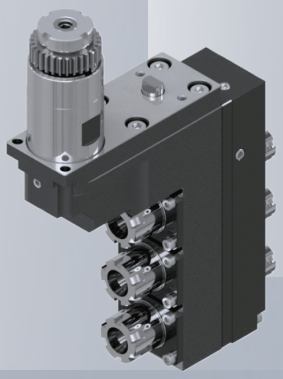

Facebook WeChat YouTube Mongtec Web LINE WhatsApp

Mongtec Precision Inc.

TEL : +886-4-22653360

FAX : +886-4-22653386

E-mail : info@mongtec.com

No. 87, Sec. 1, Daqing St., South Dist., Taichung City 402024, Taiwan (R.O.C.)

Ver 2026.09