MONGTEC®
CNC職人のこだわり
MONGTEC-TOOLS.COM

Mongtec
Hydraulic Tool Holders

mongtec | mongtec-tools.com | ai.mongtec-tools.com | info@mongtec.com

HYDRAULIC TOOLING SYSTEM

HYDRAULIC TOOLING SYSTEM 1

Hydraulic Chuck Construction 3

BT Hydraulic Chuck, Standard 5

BBT Hydraulic Chuck, Standard 8

SK Hydraulic Chuck, Standard 9

CAT Hydraulic Chuck, Standard 11

HSK Hydraulic Chuck, Standard 12

BT Hydraulic Chuck, Power Design 16

HSK Hydraulic Chuck, Power Design 17

BT Hydraulic Chuck, Slim 18

SK Hydraulic Chuck, Slim 19

Hydraulic Chuck, Slim 20

CAT Hydraulic Chuck, Slim 21

Hydraulic Chuck, Slim 24

HYDRAULIC TOOLING SYSTEM

HSK Hydraulic Chuck, Slim 25

Hydraulic Chuck, Slim 29

Hydraulic Chuck For CNC automatic lathe 30

BT Hydraulic Chuck, Short 31

SK Hydraulic Chuck, Short 31

BT Hydraulic Chuck, for Mould 32

SK Hydraulic Chuck, for Mould 33

HSK Hydraulic Chuck, for Mould 34

SK Hydraulic Chuck, for Grind 35

MTB Hydraulic Chuck 35

Hydraulic Chuck, Module 36

Hydraulic Collet 37

Hydaulic Collet Set 41

Hydraulic Chuck Construction

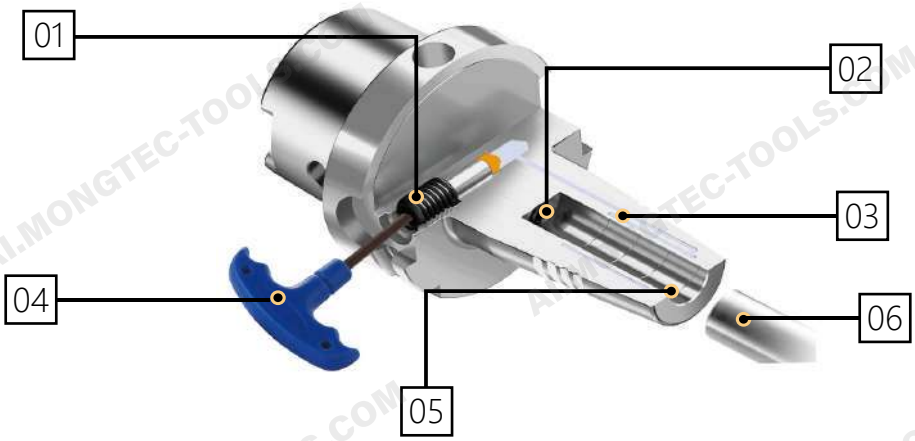

01	**Lock Screw** Tighten the locking screw to a dead stop.
02	**Adjust Screw** For presetting cutting tools.
03	**Expansion Sleeve and Chamber System** The chamber system is filled with hydraulic fluid, exerting a damping effect on the clamped tool.
04	**Hex Key** To tighten the locking screw for fast tool changes.
05	**The Grooves** High clamping pressure displaces oil, grease, or lubricant residues into the grooves, keeping the bore surfaces dry.
06	**Cutting Tool** The cutting tool is clamped with ultra-low runout.

Hydraulic Chuck Construction

High Precision
The hydraulic chuck delivers exceptional precision, significantly improving dimensional accuracy, preventing tool breakage, and reducing tool wear.

High Clamping Force
The specialized hydraulic mechanism ensures a uniform 360° clamp around the cutting tool, providing powerful clamping force, excellent rigidity, and high transmissible torque.

Superior Anti-Vibration
The internal structure offers outstanding damping performance, minimizing cutting vibrations to achieve an excellent workpiece surface finish.

Quick and Easy Setup
Efficiently insert and clamp cutting tools using a simple hex wrench for fast tool changes.

Versatile Collet System
A single tool holder can accommodate various shank diameters by utilizing reducing collets.

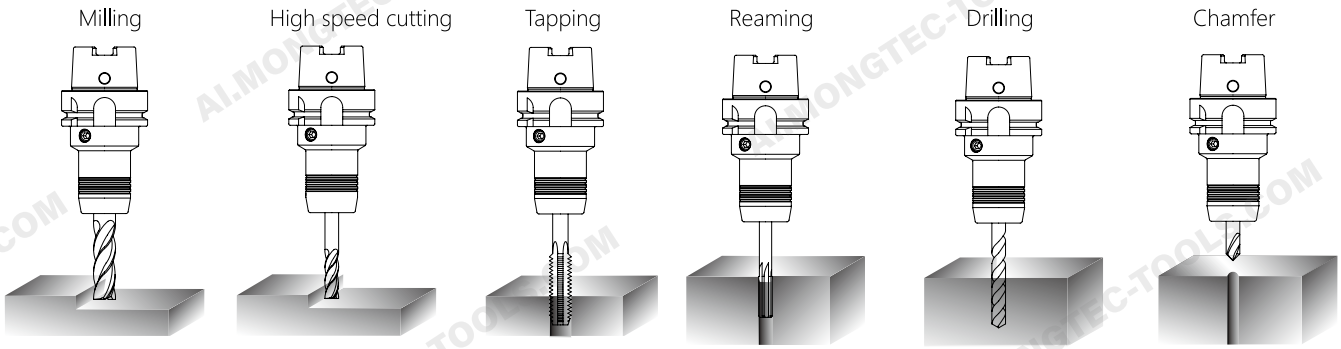

BT Hydraulic Chuck, Standard

A	RPM	
≤0.003	G2.5/25000	AD

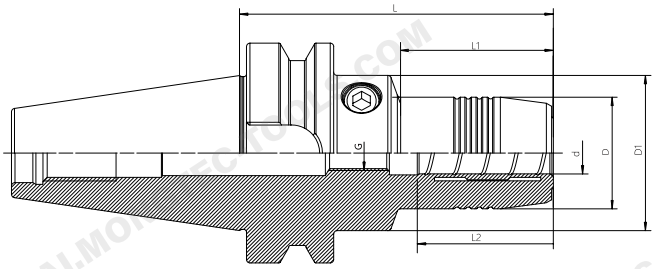

Size	d	D	D1	L	L1	L2	G
BT30QHY06Q70	6	26	45	70	28	30	M5
BT30QHY08Q70	8	28	45	70	28.5	30	M6
BT30QHY10Q75	10	30	45	75	34	34	M8x1
BT30QHY12Q85	12	32	45	85	44	39	M10x1
BT30QHY14Q85	14	34	45	85	44.5	39	M10x1
BT30QHY16Q90	16	38	45	90	50	42	M10x1
BT30QHY18Q90	18	40	45	90	50.5	42	M10x1
BT30QHY20Q90	20	42	45	90	51	44	M10x1
BT40QHY06Q65	6	26	44.5	65	43	30	M5
BT40QHY08Q65	8	28	44.5	65	44.5	30	M6
BT40QHY10Q65	10	30	44.5	65	44.5	34	M8x1
BT40QHY12Q65	12	32	44.5	65	44.5	39	M10x1
BT40QHY14Q65	14	34	44.5	65	44.5	39	M10x1
BT40QHY16Q65	16	38	50	65	44.5	42	M12x1
BT40QHY18Q65	18	40	50	65	44.5	42	M8x1
BT40QHY20Q65	20	42	50	65	45.5	44	M10x1
BT40QHY06Q90	6	26	44.5	90	43	30	M5
BT40QHY08Q90	8	28	44.5	90	43.5	30	M6
BT40QHY10Q90	10	30	44.5	90	44	34	M8x1
BT40QHY12Q90	12	32	44.5	90	44	39	M10x1
BT40QHY14Q90	14	34	44.5	90	44.5	39	M10x1
BT40QHY16Q90	16	38	50	90	44.5	42	M12x1
BT40QHY18Q90	18	40	50	90	44.5	42	M12x1
BT40QHY20Q90	20	42	50	90	45	44	M12x1
BT40QHY25Q100	25	57	62	100	54	50	M16x1
BT40QHY32Q105	32	64	-	105	-	54	M16x1

BT Hydraulic Chuck, Standard

A ↗	RPM	AD
≤0.003	G2.5/25000	

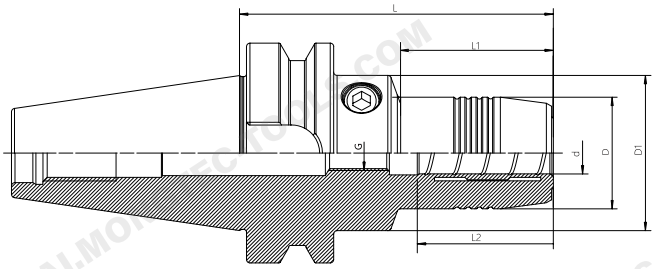

Size	d	D	D1	L	L1	L2	G
BT40QHY06Q150	6	26	50	150	102	30	M5
BT40QHY08Q150	8	28	50	150	102	30	M6
BT40QHY10Q150	10	30	50	150	103	34	M8x1
BT40QHY12Q150	12	32	50	150	103	39	M10x1
BT40QHY14Q150	14	34	50	150	103.5	39	M10x1
BT40QHY16Q150	16	38	50	150	104.5	42	M12x1
BT40QHY18Q150	18	40	50	150	104.5	42	M12x1
BT40QHY20Q150	20	42	50	150	105	44	M16x1
BT40QHY25Q150	25	57	62	150	104	50	M16x1
BT40QHY32Q150	32	64	-	150	-	54	M16x1
BT40QHY06Q200	6	26	44.5	200	152.5	30	M5
BT40QHY08Q200	8	28	44.5	200	154	30	M6
BT40QHY10Q200	10	30	44.5	200	154	34	M8x1
BT40QHY12Q200	12	32	44.5	200	155	39	M10x1
BT40QHY14Q200	14	34	44.5	200	155	39	M10x1
BT40QHY16Q200	16	38	50	200	156	42	M12x1
BT40QHY18Q200	18	40	50	200	156	42	M10x1
BT40QHY20Q200	20	42	50	200	155	44	M16x1
BT40QHY25Q200	25	57	62	200	157	50	M16x1
BT40QHY32Q200	32	64	-	200	-	54	M16x1
BT50QHY06Q90	6	26	44.5	90	34	30	M5
BT50QHY08Q90	8	28	44.5	90	34	30	M6
BT50QHY10Q90	10	30	44.5	90	34	34	M8×1
BT50QHY12Q90	12	32	44.5	90	34	39	M10×1
BT50QHY14Q90	14	34	44.5	90	34	39	M10×1
BT50QHY16Q90	16	38	50	90	34	42	M12×1
BT50QHY18Q90	18	40	50	90	34	42	M12×1
BT50QHY20Q90	20	42	50	90	34	44	M16×1
BT50QHY25Q105	25	57	70	105	46	50	M16×1
BT50QHY32Q115	32	64	70	115	57.5	54	M16×1

BT Hydraulic Chuck, Standard

A ↗	RPM	
≤0.003	G2.5/25000	AD

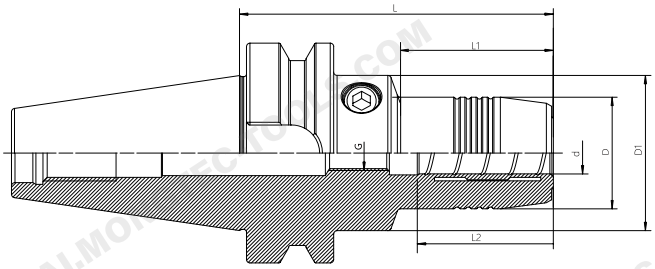

Size	d	D	D1	L	L1	L2	G
BT50QHY06Q120	6	26	44.5	120	34	30	M5
BT50QHY08Q120	8	28	44.5	120	34	30	M6
BT50QHY10Q120	10	30	44.5	120	34	34	M8×1
BT50QHY12Q120	12	32	44.5	120	34	39	M10×1
BT50QHY14Q120	14	34	44.5	120	34	39	M10×1
BT50QHY16Q120	16	38	50	120	34	42	M12×1
BT50QHY18Q120	18	40	50	120	34	42	M12×1
BT50QHY20Q120	20	42	50	120	34	44	M16×1
BT50QHY06Q150	6	26	44.5	150	34	30	M5
BT50QHY08Q150	8	28	44.5	150	34	30	M6
BT50QHY10Q150	10	30	44.5	150	34	34	M8×1
BT50QHY12Q150	12	32	44.5	150	34	39	M10×1
BT50QHY14Q150	14	34	44.5	150	34	39	M10×1
BT50QHY16Q150	16	38	50	150	34	42	M12×1
BT50QHY18Q150	18	40	50	150	34	42	M12×1
BT50QHY20Q150	20	42	50	150	34	44	M16×1
BT50QHY25Q150	25	57	70	150	91	50	M16×1
BT50QHY32Q150	32	64	70	150	93	54	M16×1

BBT Hydraulic Chuck, Standard

A ↗	RPM	
≤0.003	G2.5/25000	AD

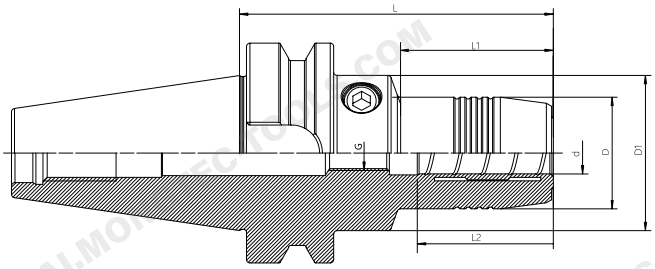

Size	d	D	D1	L	L1	L2	G
BBT40QHY06Q90	6	26	44.5	90	43	30	M5
BBT40QHY08Q90	8	28	44.5	90	43.5	30	M6
BBT40QHY10Q90	10	30	44.5	90	44	34	M8x1
BBT40QHY12Q90	12	32	44.5	90	44	39	M10x1
BBT40QHY14Q90	14	34	44.5	90	44.5	39	M10x1
BBT40QHY16Q90	16	38	50	90	44.5	42	M12x1
BBT40QHY18Q90	18	40	50	90	44.5	42	M12x1
BBT40QHY20Q90	20	42	50	90	45	44	M12x1
BBT40QHY25Q100	25	57	62	100	54	50	M16x1
BBT40QHY32Q105	32	64	-	105	-	54	M16x1
BT50QHY06Q90	6	26	44.5		34	30	M5
BT50QHY08Q90	8	28	44.5	90	34	30	M6
BT50QHY10Q90	10	30	44.5	90	34	32	M8×1
BT50QHY12Q90	12	32	44.5	90	34	37	M10×1
BT50QHY14Q90	14	34	44.5	90	34	39	M10×1
BT50QHY16Q90	16	38	50	90	34	42	M12×1
BT50QHY18Q90	18	40	50	90	34	42	M12×1
BT50QHY20Q90	20	42	50	90	34	44	M16×1
BT50QHY25Q105	25	57	70	105	48.5	50	M16×1
BT50QHY32Q115	32	64	70	115	59.5	54	M16×1
BT50QHY06Q120	6	26	44.5	120	34	27	M5
BT50QHY08Q120	8	28	44.5	120	34	27	M6×1
BT50QHY10Q120	10	30	44.5	120	34	32	M8×1
BT50QHY12Q120	12	32	44.5	120	34	37	M10×1
BT50QHY14Q120	14	34	44.5	120	34	37	M10×1
BT50QHY16Q120	16	38	44.5	120	34	42	M12×1
BT50QHY18Q120	18	40	44.5	120	34	42	M12×1
BT50QHY20Q120	20	42	50	120	34	44	M16×1

SK Hydraulic Chuck, Standard

A ↗	RPM	AD
≤0.003	G2.5/25000	

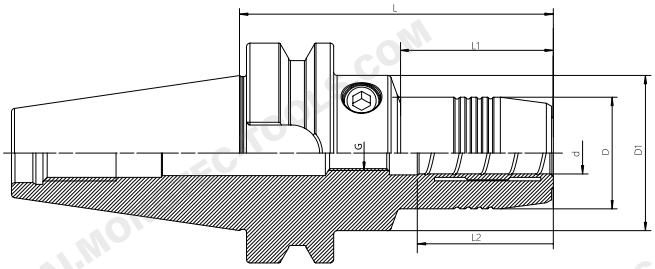

Size	d	D	D1	L	L1	L2	G
SK30QHY06Q70	6	26	45	70	20	27	M5
SK30QHY08Q70	8	28	45	70	20	27	M6
SK30QHY10Q75	10	30	45	75	21	32	M8x1
SK30QHY12Q85	12	32	44.5	85	44	39	M10x1
SK30QHY14Q85	14	34	45	85	22	37	M10x1
SK30QHY16Q90	16	38	45	90	50	42	M6
SK30QHY18Q90	18	40	45	90	50	42	M10x1
SK30QHY20Q90	20	42	45	90	50	44	M6
SK40QHY06Q65	6	26	44.5	65	42	30	M5
SK40QHY08Q65	8	28	49.5	65	30	27	M6
SK40QHY10Q65	10	30	49.5	65	31	32	M8x1
SK40QHY12Q65	12	32	44.5	65	43	39	M10x1
SK40QHY16Q65	16	38	49.5	65	33	42	M12x1
SK40QHY20Q65	20	42	49	65	44	44	M10x1
SK40QHY06Q80.5	6	26	44.5	80.5	41.5	30	M5
SK40QHY08Q80.5	8	28	44.5	80.5	42	30	M6
SK40QHY10Q80.5	10	30	44.5	80.5	42	34	M8x1
SK40QHY12Q80.5	12	32	44.5	80.5	42.5	39	M10x1
SK40QHY14Q80.5	14	34	44.5	80.5	43	39	M10x1
SK40QHY16Q80.5	16	38	50	80.5	43	42	M12x1
SK40QHY20Q80.5	20	42	49	80.5	44	44	M12x1
SK40QHY25Q80.5	25	57	68	80.5	26	50	M16x1
SK40QHY32Q80.5	32	64	80	80.5	23	54	M16x1
SK40QHY06Q110	6	26	44.5	110	71.5	30	M5
SK40QHY08Q110	8	28	44.5	110	71.5	30	M6
SK40QHY10Q110	10	30	44.5	110	72	34	M8x1
SK40QHY12Q110	12	32	44.5	110	72.5	39	M10x1
SK40QHY16Q110	16	38	50	110	72	42	M12x1
SK40QHY20Q110	20	42	50	110	73	44	M16x1

SK Hydraulic Chuck, Standard

A ↗	RPM	AD
≤0.003	G2.5/25000	

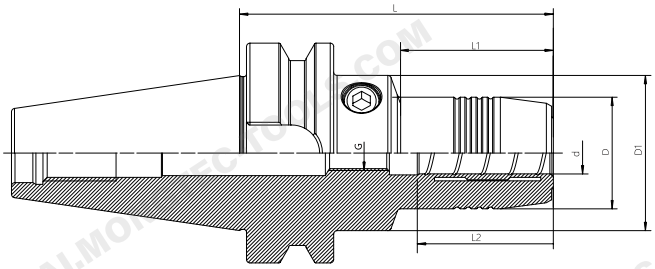

Size	d	D	D1	L	L1	L2	G
SK50QHY06Q80.5	6	26	50	80.5	39.5	30	M5
SK50QHY08Q80.5	8	28	50	80.5	39.5	30	M6
SK50QHY10Q80.5	10	30	50	80.5	40	34	M8x1
SK50QHY12Q80.5	12	32	50	80.5	40.5	39	M10x1
SK50QHY16Q80.5	16	38	49.5	80.5	40	42	M12x1
SK50QHY20Q80.5	20	42	50	80.5	44	44	M16x1
SK50QHY25Q80.5	25	57	70	80.5	43	50	M16x1
SK50QHY32Q80.5	32	64	70	80.5	44	54	M16x1
SK50QHY06Q110	6	26	49.5	110	30	27	M5
SK50QHY08Q110	8	28	49.5	110	30	27	M6
SK50QHY10Q110	10	30	49.5	110	32	32	M8x1
SK50QHY12Q110	12	32	50	110	44	39	M10x1
SK50QHY16Q110	16	38	49.5	110	40	42	M12x1
SK50QHY20Q110	20	42	50	110	44	44	M16x1
SK50QHY25Q110	25	27	70	110	70	50	M16x1
SK50QHY06Q150	6	26	49.5	150	30	27	M5
SK50QHY08Q150	8	28	49.5	150	30	27	M6
SK50QHY10Q150	10	30	49.5	150	32	32	M8x1
SK50QHY12Q150	12	32	49.5	150	35	37	M10x1
SK50QHY16Q150	16	38	49.5	150	40	42	M12x1
SK50QHY20Q150	20	42	50	150	44	4	M16x1

CAT Hydraulic Chuck, Standard

A ↗	RPM	AD
≤0.003	G2.5/25000	

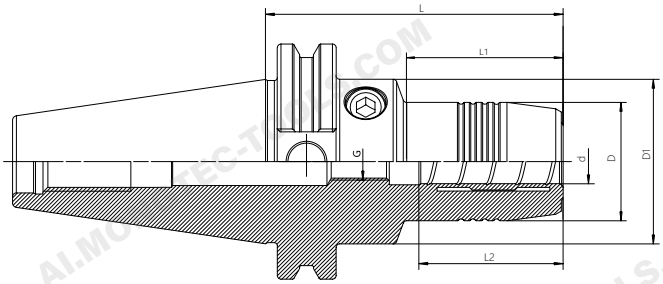

Size	d	D	D1	L	L1	L2	G
CAT40QHY06Q81	6	26	49.5	81	30	27	M5
CAT40QHY08Q81	8	28	49.5	81	30	27	M6
CAT40QHY10Q81	10	30	49.5	81	31	32	M8x1
CAT40QHY12Q81	12	32	49.5	81	31.5	37	M10x1
CAT40QHY16Q81	16	38	49.5	81	33	42	M12x1
CAT40QHY20Q81	20	42	49.5	81	34	42	M10x1
CAT40QHY25Q81	25	55	66	81	22	48	M16x1
CAT40QHY32Q81	32	63	80	81	25.5	55	M16x1
CAT40QHY06Q110	6	26	49.5	110	29.5	27	M5
CAT40QHY08Q110	8	28	49.5	110	30	27	M6
CAT40QHY10Q110	10	30	49.5	110	31	32	M8x1
CAT40QHY12Q110	12	32	49.5	110	31.5	37	M10x1
CAT40QHY16Q110	16	38	49.5	110	33	42	M12x1
CAT40QHY20Q110	20	42	49.5	110	34	42	M16x1
CAT50QHY06Q81	6	26	49.5	81	30	27	M5
CAT50QHY08Q81	8	28	49.5	81	30	27	M6
CAT50QHY10Q81	10	30	49.5	81	32	32	M8x1
CAT50QHY12Q81	12	32	49.5	81	35	37	M10x1
CAT50QHY16Q81	16	38	49.5	81	40	42	M12x1
CAT50QHY20Q81	20	42	49.5	81	40	42	M16x1

HSK Hydraulic Chuck, Standard

A ↗	RPM	
≤0.003	G2.5/25000	AD

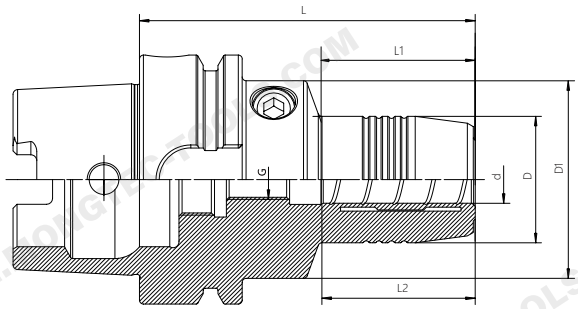

Size	d	D	D1	L	L1	L2	G
HSK32AQHY06Q80	6	26	40	80	29	27	M5
HSK32AQHY08Q80	8	28	40	80	29	27	M6
HSK32AQHY10Q85	10	30	40	85	35	32	M6
HSK32AQHY12Q90	12	32	40	90	40	37	M6
HSK40AQHY06Q70	6	26	34	70	36	27	M5
HSK40AQHY08Q70	8	28	34	70	36	27	M6
HSK40AQHY10Q75	10	30	34	75	42	32	M6
HSK40AQHY12Q80	12	32	34	80	48	37	M6
HSK50AQHY06Q70	6	26	40	70	28	27	M5
HSK50AQHY08Q70	8	28	40	70	28	27	M6
HSK50AQHY10Q75	10	30	40	75	39	32	M8×1
HSK50AQHY12Q85	12	32	40	85	44	37	M10×1
HSK50AQHY14Q85	14	34	41	85	43.5	39	M8×1
HSK50AQHY16Q90	16	38	53	90	30	42	M12×1
HSK50AQHY18Q90	18	40	57	90	30	42	M8×1
HSK50AQHY20Q90	20	42	60	90	29	42	M16×1
HSK63AQHY06Q70	6	26	50	70	23	30	M5
HSK63AQHY08Q70	8	28	50	70	23.5	30	M6
HSK63AQHY10Q80	10	30	50	80	34	34	M8x1
HSK63AQHY12Q85	12	32	50	85	39	39	M10x1
HSK63AQHY14Q85	14	34	50	85	40	39	M10×1
HSK63AQHY16Q90	16	38	50	90	45.5	42	M10×1
HSK63AQHY18Q90	18	40	50	90	46	42	M10×1
HSK63AQHY20Q90	20	42	50	90	46	44	M10×1
HSK63AQHY25Q120	25	57	62	120	58	50	M16×1
HSK63AQHY32Q125	32	64	-	125	-	54	M16×1

HSK Hydraulic Chuck, Standard

A ↗	RPM	AD
≤0.003	G2.5/25000	

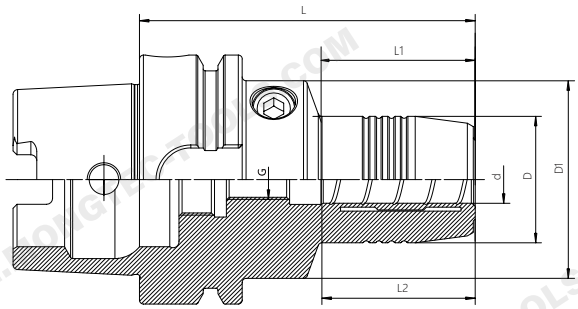

Size	d	D	D1	L	L1	L2	G
HSK63AQHY06Q150	6	26	50	150	103	30	M5
HSK63AQHY08Q150	8	28	50	150	103	30	M6
HSK63AQHY10Q150	10	30	50	150	104	34	M8x1
HSK63AQHY12Q150	12	32	50	150	104	39	M10x1
HSK63AQHY14Q150	14	34	50	150	105	39	M10x1
HSK63AQHY16Q150	16	38	50	150	105	42	M12x1
HSK63AQHY18Q150	18	40	50	150	106	42	M12x1
HSK63AQHY20Q150	20	42	50	150	106	44	M16x1
HSK63AQHY25Q150	25	57	62	150	88	50	M16x1
HSK63AQHY32Q150	32	64	70	150	88	54	M16x1
HSK63AQHY06Q200	6	26	50	200	103.5	30	M5
HSK63AQHY08Q200	8	28	50	200	104	30	M6
HSK63AQHY10Q200	10	30	50	200	104.5	34	M8x1
HSK63AQHY12Q200	12	32	50	200	104.5	39	M10x1
HSK63AQHY14Q200	14	34	50	200	105.5	42	M12x1
HSK63AQHY16Q200	16	38	50	200	105.5	42	M12x1
HSK63AQHY18Q200	18	40	50	200	105.5	42	M12x1
HSK63AQHY20Q200	20	42	50	200	106	44	M16x1
HSK63AQHY25Q200	25	57	62	200	152	50	M16x1
HSK63AQHY32Q200	32	64	70	200	152	54	M16x1
HSK80AQHY06Q80	6	26	50	80	33	30	M5
HSK80AQHY12Q95	12	32	50	95	49	39	M10x1
HSK80AQHY14Q100	14	34	50	100	54.5	39	M10x1
HSK80AQHY16Q100	16	38	50	100	55	42	M12x1
HSK80AQHY20Q105	20	42	50	105	61	44	M12x1
HSK80AQHY25Q110	25	57	63	110	64.5	50	M16x1
HSK80AQHY32Q100	32	64	67	100	55	54	M10x1

HSK Hydraulic Chuck, Standard

A ↗	RPM	AD
≤0.003	G2.5/25000	

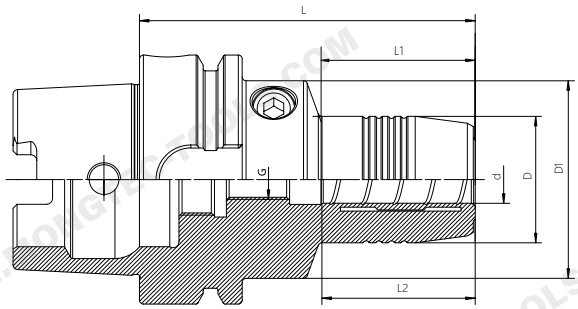

Size	d	D	D1	L	L1	L2	G
HSK100AQHY06Q75	6	26	50	75	25	30	M5
HSK100AQHY08Q75	8	28	50	75	25.5	30	M6
HSK100AQHY10Q90	10	30	50	90	41	34	M8x1
HSK100AQHY12Q95	12	32	50	95	46	39	M10×1
HSK100AQHY14Q95	14	34	50	95	47	37	M10×1
HSK100AQHY16Q100	16	38	50	100	52	42	M12x1
HSK100AQHY18Q100	18	40	50	100	52.5	42	M12x1
HSK100AQHY20Q105	20	42	60	105	54	44	M16x1
HSK100AQHY25Q110	25	57	70	110	60	50	M16x1
HSK100AQHY32Q110	32	64	70	110	61.5	54	M16x1
HSK100AQHY06Q150	6	26	50	150	100	30	M5
HSK100AQHY08Q150	8	28	50	150	100.5	30	M6
HSK100AQHY10Q150	10	30	50	150	101	34	M8x1
HSK100AQHY12Q150	12	32	50	150	101.5	39	M10x1
HSK100AQHY14Q150	14	34	50	150	105.5	42	M12x1
HSK100AQHY16Q150	16	38	50	150	105.5	42	M12x1
HSK100AQHY18Q150	18	40	50	150	105.5	42	M12x1
HSK100AQHY20Q150	20	42	60	150	99	44	M16x1
HSK100AQHY25Q150	25	57	70	150	100	50	M16x1
HSK100AQHY32Q150	32	64	70	150	102	54	M16x1
HSK100AQHY06Q200	6	26	50	200	103.5	30	M5
HSK100AQHY08Q200	8	28	50	200	104	30	M6
HSK100AQHY10Q200	10	30	50	200	104.5	34	M8x1
HSK100AQHY12Q200	12	32	50	200	104.5	39	M10x1
HSK100AQHY14Q200	14	34	50	200	105.5	42	M12x1
HSK100AQHY16Q200	16	38	50	200	105.5	42	M12x1
HSK100AQHY18Q200	18	40	50	200	105.5	42	M12x1
HSK100AQHY20Q200	20	42	60	200	149	44	M16x1
HSK100AQHY25Q200	25	57	62	200	152	50	M16x1
HSK100AQHY32Q200	32	64	70	200	152	54	M16x1

HSK Hydraulic Chuck, Standard

A ↗	RPM	💧
≤0.003	G2.5/25000	AD

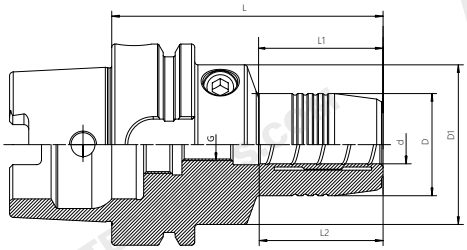

Size	d	D	D1	L	L1	L2	G
HSK40EQHY06Q70	6	26	34	70	36	27	M5
HSK40EQHY08Q70	8	28	34	70	36	27	M6
HSK40EQHY10Q75	10	30	34	75	42	32	M6
HSK40EQHY12Q80	12	32	34	80	48	37	M6
HSK50EQHY06Q70	6	26	40	70	28	27	M5
HSK50EQHY08Q70	8	28	40	70	28	27	M6
HSK50EQHY10Q75	10	30	40	75	34	32	M8x1
HSK50EQHY12Q85	12	32	40	85	44	37	M10x1
HSK50EQHY16Q90	16	38	53	90	30	42	M12x1
HSK50EQHY20Q90	20	42	60	90	29	42	M16x1

HSK Hydraulic Chuck, Standard

A ↗	RPM	💧
≤0.003	G2.5/25000	AD

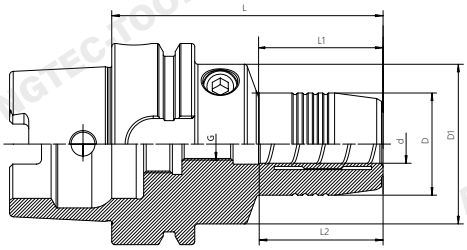

Size	d	D	D1	L	L1	L2	G
HSK63FQHY06Q70	6	26	50	70	23	30	M5
HSK63FQHY08Q70	8	28	50	70	23.5	30	M6
HSK63FQHY10Q80	10	30	50	80	34	34	M8×1
HSK63FQHY12Q85	12	32	50	85	39	39	M6
HSK63FQHY14Q85	14	34	50	85	40	37	M10×1
HSK63FQHY16Q90	16	38	50	90	45	42	M12×1
HSK63FQHY18Q90	18	40	50	90	47	42	M12×1
HSK63FQHY20Q90	20	42	50	90	46	44	M12×1
HSK63FQHY25Q120	25	57	63	120	59	48	M16×1
HSK63FQHY32Q125	32	64	75	125	63	55	M16×1

BT Hydraulic Chuck, Power Design

A ↗	RPM	💧
≤0.003	G2.5/25000	AD

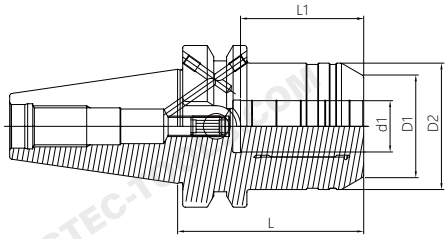

Size	d1	D1	D2	L	L1	G
BT30QHYP12Q69	12	32	42	69	41	M8x1
BT30QHYP20Q90	20	38	42	90	48	M8x1
BT40QHYP12Q58	12	32	42	58	41	M8x1
BT40QHYP20Q72.5	20	38	49.25	72.5	48	M8x1
BT50QHYP20Q83.5	20	38	49.25	83.5	48	M8x1
BT50QHYP32Q90	32	58.5	72	90	57	M8x1

SK Hydraulic Chuck, Power Design

A ↗	RPM	💧
≤0.003	G2.5/25000	AD

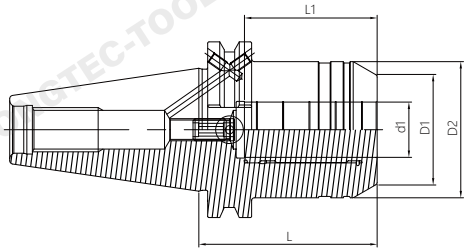

Size	d1	D1	D2	L	L1	G
SK40QHYP12Q50	12	32	42	50	41	M8x1
SK40QHYP20Q64.5	20	38	49.5	64.5	48	M8x1
SK50QHYP20Q64.5	20	38	49.5	64.5	48	M8x1
SK50QHYP32Q81	32	58.5	72	81	57	M8x1

HSK Hydraulic Chuck, Power Design

A ↗	RPM	
≤0.003	G2.5/25000	AD

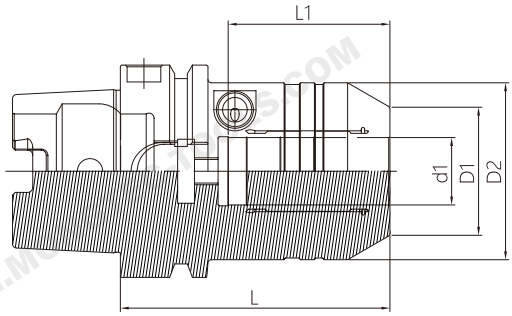

Size	d1	D1	D2	L	L1	G
HSK63AQHYP12Q80	12	32	42	80	41	M8x1
HSK63AQHYP20Q80	20	38	52.5	80	48	M8x1
HSK100AQHYP20Q90	20	38	52.5	90	48	M8x1
HSK100AQHYP32Q100	32	58.5	72	100	57	M8x1

BT Hydraulic Chuck, Slim

A ↗	RPM	
≤0.003	G2.5/25000	AD

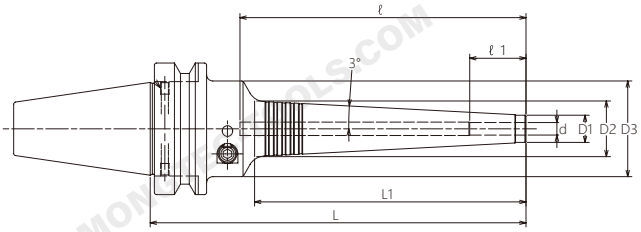

Size	d	L	L1	D1	D2	D3	ℓ	ℓ1
BT30QHYS03Q70	3	70	28	11	14.0	46	93	16
BT30QHYS03Q85	3	85	37	11	14.9	46	108	16
BT30QHYS03Q130	3	130	84	11	19.9	46	153	16
BT30QHYS04Q70	4	70	28	11	14.0	46	93	19
BT30QHYS04Q85	4	85	37	11	14.9	46	108	19
BT30QHYS04Q130	4	130	84	11	19.9	46	153	19
BT30QHYS06Q90	6	90	38	13	17.0	46	58	27
BT30QHYS06Q135	6	135	84	13	21.9	46	92	27
BT30QHYS06Q150	6	150	99	13	23.4	46	107	27
BT30QHYS06Q165	6	165	114	13	25.0	46	122	27
BT30QHYS06Q180	6	180	130	13	26.7	46	137	27
BT30QHYS08Q90	8	90	38	15	19.0	46	58	27
BT30QHYS08Q135	8	135	84	15	23.9	46	92	27
BT30QHYS08Q150	8	150	99	15	25.4	46	107	27
BT30QHYS08Q165	8	165	114	15	27.0	46	122	27
BT30QHYS08Q180	8	180	130	15	28.7	46	137	27
BT30QHYS10Q105	10	105	53	17	22.6	46	73	33
BT30QHYS10Q135	10	135	84	17	25.9	46	92	33
BT30QHYS10Q150	10	150	99	17	27.4	46	107	33
BT30QHYS10Q165	10	165	114	17	29.0	46	122	33
BT30QHYS10Q180	10	180	130	17	30.7	46	137	33
BT30QHYS12Q105	12	105	53	19	24.6	46	73	36
BT30QHYS12Q135	12	135	84	19	27.9	46	92	36
BT30QHYS12Q150	12	150	99	19	29.4	46	107	36
BT30QHYS12Q165	12	165	114	19	31.0	46	122	36
BT30QHYS12Q180	12	180	130	19	32.7	46	137	36

SK Hydraulic Chuck, Slim

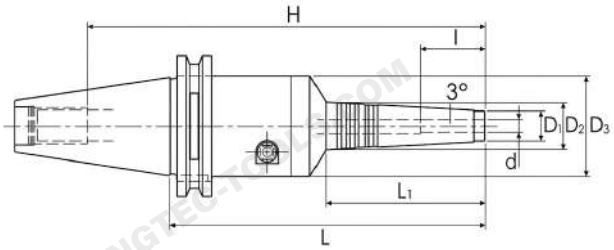

Size	d	D1	D2	D3	L	L1	L0	l	H
SK40QHYS03Q75	3	11	13.0	46	75	19	-	18	110
SK40QHYS03Q90	3	11	14.2	46	90	30	-	18	125
SK40QHYS03Q135	3	11	18.5	46	135	71	-	18	170
SK40QHYS04Q75	4	11	13.0	46	75	19	-	24	110
SK40QHYS04Q90	4	11	14.2	46	90	30	-	24	125
SK40QHYS04Q135	4	11	18.5	46	135	71	-	24	170
SK40QHYS06Q90	6	13	15.8	46	90	26	-	29	125
SK40QHYS06Q135	6	13	20.5	46	135	71	-	29	170
SK40QHYS06Q150	6	13	22.2	46	150	87	-	29	185
SK40QHYS06Q165	6	13	23.7	46	165	102	-	29	200
SK40QHYS06Q180	6	13	25.4	46	180	118	-	29	215
SK40QHYS08Q90	8	15	17.9	46	90	27	-	29	125
SK40QHYS08Q135	8	15	22.6	46	135	72	-	29	170
SK40QHYS08Q150	8	15	24.2	46	150	87	-	29	185
SK40QHYS08Q165	8	15	25.8	46	165	103	-	29	200
SK40QHYS08Q180	8	15	27.4	46	180	118	-	29	215
SK40QHYS10Q90	10	17	20.4	46	90	32	-	40	125
SK40QHYS10Q135	10	17	24.6	46	135	72	-	40	170
SK40QHYS10Q150	10	17	26.3	46	150	87	-	40	185
SK40QHYS10Q165	10	17	27.8	46	165	103	-	40	200
SK40QHYS10Q180	10	17	29.5	46	180	119	-	40	215
SK40QHYS12Q90	12	19	22.5	46	90	33	-	40	125
SK40QHYS12Q135	12	19	26.7	46	135	73	-	40	170
SK40QHYS12Q150	12	19	28.3	46	150	88	-	40	185
SK40QHYS12Q165	12	19	30.0	46	165	104	-	40	200
SK40QHYS12Q180	12	19	31.5	46	180	119	-	40	215
SK40QHYS16Q135	16	23	30.6	525	135	72	35	40	90
SK40QHYS16Q165	16	23	33.8	525	165	103	35	40	120
SK40QHYS16Q180	16	23	35.5	525	180	119	35	40	135
SK40QHYS20Q150	20	28	34.7	62	150	63	35	40	85
SK40QHYS20Q180	20	28	37.8	62	180	93	35	40	115
SK40QHYS20Q195	20	28	39.5	62	195	109	35	40	130
SK40QHYS25Q150	25	37	43.9	62	150	65	35	50	85
SK40QHYS25Q180	25	37	47.1	62	180	96	35	50	115
SK40QHYS25Q195	25	37	48.8	62	195	112	35	50	130

Hydraulic Chuck, Slim

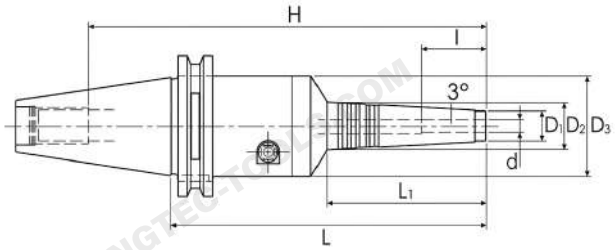

Size	d	D1	D2	D3	L	L1	l	H
SK50QHYS06Q105	6	13	15.8	46	105	26	29	161
SK50QHYS06Q150	6	13	20.5	46	150	71	29	206
SK50QHYS06Q165	6	13	22.2	46	165	87	29	221
SK50QHYS06Q180	6	13	23.7	46	180	102	29	236
SK50QHYS06Q195	6	13	25.4	46	195	118	29	251
SK50QHYS08Q105	8	15	17.8	46	105	27	29	160
SK50QHYS08Q150	8	15	22.5	46	150	72	29	205
SK50QHYS08Q165	8	15	24.1	46	165	87	29	220
SK50QHYS08Q180	8	15	25.8	46	180	103	29	235
SK50QHYS08Q195	8	15	27.4	46	195	118	29	250
SK50QHYS10Q150	10	17	24.6	46	150	72	40	205
SK50QHYS10Q165	10	17	26.1	46	165	87	40	220
SK50QHYS10Q180	10	17	27.8	46	180	103	40	235
SK50QHYS10Q195	10	17	29.5	46	195	119	40	250
SK50QHYS12Q150	12	19	26.7	46	150	73	40	205
SK50QHYS12Q165	12	19	28.2	46	165	88	40	220
SK50QHYS12Q180	12	19	29.9	46	180	104	40	235
SK50QHYS12Q195	12	19	31.5	46	195	119	40	250
SK50QHYS16Q150	16	23	30.5	52.5	150	72	40	90
SK50QHYS16Q180	16	23	33.8	52.5	180	103	40	120
SK50QHYS16Q195	16	23	34.6	52.5	195	119	40	135
SK50QHYS20Q150	20	28	34.6	62	150	63	40	85
SK50QHYS20Q180	20	28	37.7	62	180	93	40	115
SK50QHYS20Q195	20	28	39.4	62	195	109	40	130
SK50QHYS25Q150	25	37	43.6	62	150	65	50	85
SK50QHYS25Q180	25	37	47.1	62	180	96	50	115
SK50QHYS25Q195	25	37	48.7	62	195	112	50	130

CAT Hydraulic Chuck, Slim

A ↗	RPM	
≤0.003	G2.5/25000	AD

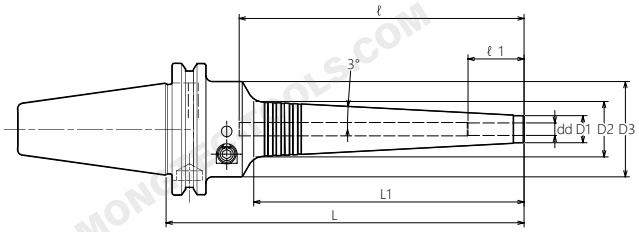

Size	d	L	L1	D1	D2	D3	L	ℓ1
CAT40QHYS03Q75	3	75	28	11	14	46	110	16
CAT40QHYS03Q90	3	90	37	11	14.9	46	125	16
CAT40QHYS03Q135	3	135	84	11	19.9	46	170	16
CAT40QHYS04Q75	4	75	28	11	14	46	110	19
CAT40QHYS04Q90	4	90	37	11	14.9	46	125	19
CAT40QHYS04Q135	4	135	84	11	19.9	46	170	19
CAT40QHYS06Q90	6	90	38	13	17	46	53	27
CAT40QHYS06Q150	6	150	84	13	21.9	46	92	27
CAT40QHYS06Q165	6	165	99	13	23.4	46	107	27
CAT40QHYS06Q180	6	180	114	13	25	46	122	27
CAT40QHYS06Q195	6	195	130	13	26.7	46	137	27
CAT40QHYS08Q90	8	90	38	15	19	46	53	27
CAT40QHYS08Q150	8	150	84	15	23.9	46	92	27
CAT40QHYS08Q165	8	165	99	15	25.4	46	107	27
CAT40QHYS08Q180	8	180	114	15	27	46	122	27
CAT40QHYS08Q195	8	195	130	15	28.7	46	137	27
CAT40QHYS10Q105	10	105	53	17	22.6	46	68	33
CAT40QHYS10Q150	10	150	84	17	25.9	46	92	33
CAT40QHYS10Q165	10	165	99	17	27.4	46	107	33
CAT40QHYS10Q180	10	180	114	17	29	46	122	33
CAT40QHYS10Q195	10	195	130	17	30.7	46	137	33
CAT40QHYS12Q105	12	105	53	19	24.6	46	68	36
CAT40QHYS12Q150	12	150	84	19	27.9	46	92	36
CAT40QHYS12Q165	12	165	99	19	29.4	46	107	36
CAT40QHYS12Q180	12	180	114	19	31	46	122	36
CAT40QHYS12Q195	12	195	130	19	32.7	46	137	36
CAT40QHYS16Q150	16	150	84	23	31.9	52.5	91	40
CAT40QHYS16Q180	16	180	114	23	35	52.5	120	40
CAT40QHYS16Q195	16	195	129	23	38.6	52.5	135	40
CAT40QHYS20Q150	20	150	84	28	36.9	60	91	40
CAT40QHYS20Q180	20	180	114	28	40	60	120	40
CAT40QHYS20Q195	20	195	129	28	41	60	135	40
CAT40QHYS25Q150	25	150	84	37	45.9	60	91	50
CAT40QHYS25Q180	25	180	114	37	49	60	120	50
CAT40QHYS25Q195	25	195	129	37	50.6	60	135	50

CAT Hydraulic Chuck, Slim

A	RPM	
≤0.003	G2.5/25000	AD

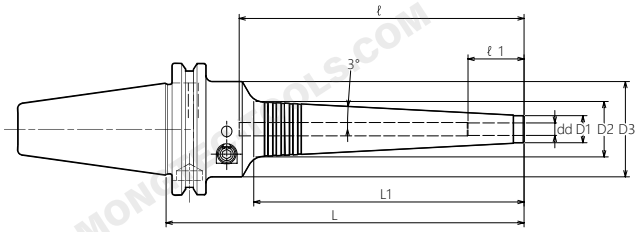

Size	d	L	L1	L2	D1	D2	D3	ℓ	ℓ1
CAT50QHYS06Q150	6	150	84	115	13	21.9	46	92	27
CAT50QHYS06Q195	6	195	130	160	13	26.7	46	137	27
CAT50QHYS08Q150	8	150	84	115	15	23.9	46	92	27
CAT50QHYS08Q195	8	195	130	160	15	28.7	46	137	27
CAT50QHYS10Q150	10	150	84	115	17	25.9	46	92	33
CAT50QHYS10Q195	10	195	130	160	17	30.7	46	137	33
CAT50QHYS12Q150	12	150	84	115	19	27.9	46	92	36
CAT50QHYS12Q195	12	195	130	160	19	32.7	46	137	36
CAT50QHYS16Q150	16	150	84	115	23	31.9	52.5	91	40
CAT50QHYS16Q195	16	195	129	160	23	36.6	52.5	135	40
CAT50QHYS20Q150	20	150	84	115	28	36.9	60	91	40
CAT50QHYS20Q195	20	195	129	160	28	41.6	60	135	40
CAT50QHYS25Q150	25	150	84	115	37	45.9	60	91	50
CAT50QHYS25Q195	25	195	129	160	37	50.6	60	135	50

CAT Hydraulic Chuck, Slim

A ↗	RPM	
≤0.003	G2.5/25000	AD

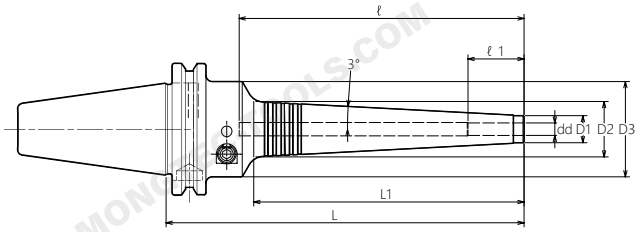

Size	d	L	L1	D1	D2	D3	L	ℓ1
CAT40QHYS0125Q90	0.125"	3.543”	1.457”	0.433”	0.5”	1.811”	4.921”	0.63”
CAT40QHYS0125Q135	0.125"	5.315”	3.307”	0.433”	0.783”	1.811”	6.692”	0.63”
CAT40QHYS0250Q150	0.25"	5.906”	3.307”	0.512”	0.862”	1.811”	3.622”	1.063”
CAT40QHYS0250Q165	0.25"	6.496”	3.898”	0.512”	0.921”	1.811”	4.213”	1.063”
CAT40QHYS0250Q195	0.25"	7.677”	5.118”	0.512”	1.051”	1.811”	5.394”	1.063”
CAT40QHYS0312Q150	0.312"	5.906”	3.307”	0.591”	0.941”	1.811”	3.622”	1.063”
CAT40QHYS0312Q165	0.312"	6.496”	3.898”	0.591”	1”	1.811”	4.213”	1.063”
CAT40QHYS0312Q195	0.312"	7.677”	5.118”	0.591”	1.13”	1.811”	5.394”	1.063”
CAT40QHYS0375Q150	0.375"	5.906”	3.307”	0.669”	1.02”	1.811”	3.622”	1.299”
CAT40QHYS0375Q165	0.375"	6.496”	3.898”	0.669”	1.079”	1.811”	4.213”	1.299”
CAT40QHYS0375Q195	0.375"	7.677”	5.118”	0.669”	1.209”	1.811”	5.394”	1.299”
CAT40QHYS0500Q150	0.500"	5.906”	3.307”	0.787”	1.138”	1.811”	3.622”	1.417”
CAT40QHYS0500Q165	0.500"	6.496”	3.898”	0.787”	1.197”	1.811”	4.213”	1.417”
CAT40QHYS0500Q195	0.500"	7.677”	5.118”	0.787”	1.327”	1.811”	5.394”	1.417”
CAT40QHYS0625Q150	0.625"	5.906”	3.307”	0.906”	1.256”	2.067”	3.583”	1.575”
CAT40QHYS0625Q180	0.625"	7.087”	4.488”	0.906”	1.378”	2.067”	4.724”	1.575”
CAT40QHYS0625Q195	0.625"	7.677”	5.079”	0.906”	1.441”	2.067”	5.315”	1.575”
CAT40QHYS0750Q150	0.75”	5.906”	3.307”	1.102”	1.453”	2.362”	3.583”	1.575”
CAT40QHYS0750Q180	0.75”	7.087”	4.488”	1.102”	1.575”	2.362”	4.724”	1.575”
CAT40QHYS0750Q195	0.75”	7.677”	5.079”	1.102”	1.638”	2.362”	5.315”	1.575”
CAT40QHYS1000Q150	1”	5.906”	3.307”	1.496”	1.846”	2.362”	3.583”	1.969”
CAT40QHYS1000Q180	1”	7.087”	4.488”	1.496”	1.969”	2.362”	4.724”	1.969”
CAT40QHYS1000Q195	1”	7.677”	5.079”	1.496”	2.031”	2.362”	5.315”	1.969”

Hydraulic Chuck, Slim

A ↗	RPM	AD
≤0.003	G2.5/25000	

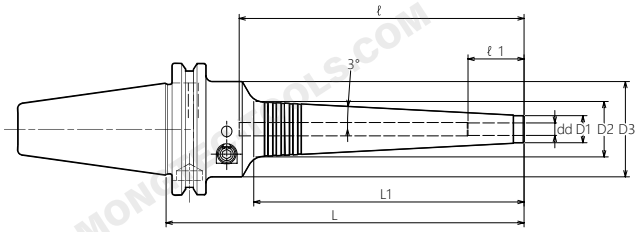

Size	d	L	L1	L2	D1	D2	D3	ℓ	ℓ1
CAT50QHYS0250Q150	0.25”	5.906”	3.307”	4.528”	0.512”	0.862”	1.811”	3.622”	1.063”
CAT50QHYS0250Q180	0.25”	7.087”	4.488”	5.709”	0.512”	1.051”	1.811”	4.803”	1.063”
CAT50QHYS0250Q195	0.25”	7.677”	5.118”	6.299”	0.512”	1.051”	1.811”	5.394”	1.063”
CAT50QHYS0312Q150	0.312”	5.906”	3.307”	4.528”	0.591”	0.941”	1.811”	3.622”	1.063”
CAT50QHYS0312Q180	0.312”	7.087”	4.488”	5.709”	0.591”	1.13”	1.811”	4.803”	1.063”
CAT50QHYS0312Q195	0.312”	7.677”	5.118”	6.299”	0.591”	1.13”	1.811”	5.394”	1.063”
CAT50QHYS0375Q150	0.375”	5.906”	3.307”	4.528”	0.669”	1.02”	1.811”	4.803”	1.299”
CAT50QHYS0375Q180	0.375”	7.087”	4.488”	5.709”	0.669”	1.209”	1.811”	5.394”	1.299”
CAT50QHYS0375Q195	0.375”	7.677”	5.118”	6.299”	0.669”	1.209”	1.811”	5.394”	1.299”
CAT50QHYS0500Q150	0.5”	5.906”	3.307”	4.528”	0.787”	1.138”	1.811”	3.622”	1.417”
CAT50QHYS0500Q180	0.5”	7.087”	4.488”	5.709”	0.787”	1.26”	1.811”	4.803”	1.417”
CAT50QHYS0500Q195	0.5”	7.677”	5.118”	6.299”	0.787”	1.327”	1.811”	5.394”	1.417”
CAT50QHYS0625Q150	0.625”	5.906”	3.307”	4.528”	0.906”	1.256”	2.067”	3.583”	1.575”
CAT50QHYS0625Q180	0.625”	7.087”	4.488”	5.709”	0.906”	1.441”	2.067”	4.724”	1.575”
CAT50QHYS0625Q195	0.625”	7.677”	5.079”	6.299”	0.906”	1.441”	2.067”	5.315”	1.575”
CAT50QHYS0750Q150	0.75”	5.906”	3.307”	4.528”	1.102”	1.453”	2.362”	3.583”	1.575”
CAT50QHYS0750Q180	0.75”	7.087”	4.488”	5.709”	1.102”	1.638”	2.362”	4.724”	1.575”
CAT50QHYS0750Q195	0.75”	7.677”	5.079”	6.299”	1.102”	1.638”	2.362”	5.315”	1.575”
CAT50QHYS1000Q150	1”	5.906”	3.307”	4.528”	1.496”	1.846”	2.362”	3.583”	1.969”
CAT50QHYS1000Q180	1”	7.087”	4.488”	5.709”	1.496”	1.969”	2.362”	4.724”	1.969”
CAT50QHYS1000Q195	1”	7.677”	5.079”	6.299”	1.496”	2.031”	2.362”	5.315”	1.969”

HSK Hydraulic Chuck, Slim

A ↗	RPM	AD
≤0.003	G2.5/25000	

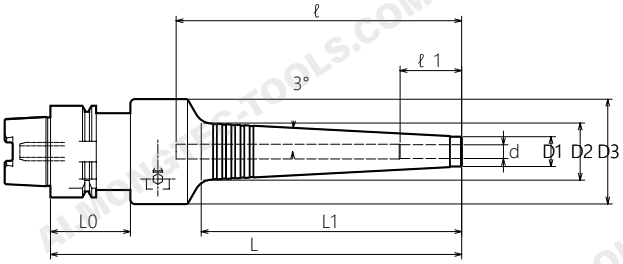

Size	d	L	L1	D1	D2	D3	L0	ℓ1	ℓ2
HSK40AQHYS03Q90	3	90	28	11	14.0	46	35	74	16
HSK40AQHYS03Q100	3	100	37	11	14.9	46	35	84	16
HSK40AQHYS03Q145	3	145	84	11	19.9	46	35	129	16
HSK40AQHYS04Q90	4	90	28	11	14.0	46	35	74	19
HSK40AQHYS04Q100	4	100	37	11	14.9	46	35	84	19
HSK40AQHYS04Q145	4	145	84	11	19.9	46	35	129	19
HSK40AQHYS06Q105	6	105	38	13	17.0	46	35	55	27
HSK40AQHYS06Q150	6	150	84	13	21.9	46	35	97	27
HSK40AQHYS06Q165	6	165	99	13	23.4	46	35	112	27
HSK40AQHYS06Q180	6	180	114	13	25.0	46	35	127	27
HSK40AQHYS08Q105	8	105	38	15	19.0	46	35	55	27
HSK40AQHYS08Q150	8	150	84	15	23.9	46	35	97	27
HSK40AQHYS08Q165	8	165	99	15	25.4	46	35	112	27
HSK40AQHYS08Q180	8	180	114	15	27.0	46	35	127	27
HSK40AQHYS10Q120	10	120	53	17	22.6	46	35	69	33
HSK40AQHYS10Q150	10	150	84	17	25.9	46	35	97	33
HSK40AQHYS10Q165	10	165	99	17	27.4	46	35	112	33
HSK40AQHYS10Q180	10	180	114	17	29.0	46	35	127	33
HSK40AQHYS12Q120	12	120	53	19	24.6	46	35	69	36
HSK40AQHYS12Q150	12	150	84	19	27.9	46	35	97	36
HSK40AQHYS12Q165	12	165	99	19	29.4	46	35	112	36
HSK40AQHYS12Q180	12	180	114	19	31.0	46	35	127	36

HSK Hydraulic Chuck, Slim

A ↗	RPM	AD
≤0.003	G2.5/25000	

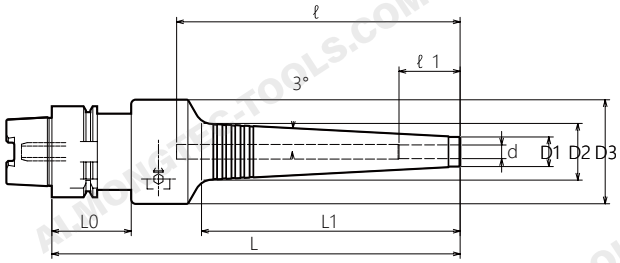

Size	d	L	L1	D1	D2	D3	L0	ℓ1	ℓ2
HSK50AQHYS03Q95	3	95	28	11	14.0	46	42	75	16
HSK50AQHYS03Q105	3	105	37	11	14.9	46	42	85	16
HSK50AQHYS03Q150	3	150	84	11	19.9	46	42	130	16
HSK50AQHYS04Q95	4	95	28	11	14.0	46	42	75	19
HSK50AQHYS04Q105	4	105	37	11	14.9	46	42	85	19
HSK50AQHYS04Q150	4	150	84	11	19.9	46	42	130	19
HSK50AQHYS06Q105	6	105	38	13	17.0	46	42	53	27
HSK50AQHYS06Q150	6	150	84	13	21.9	46	42	95	27
HSK50AQHYS06Q165	6	165	99	13	23.4	46	42	110	27
HSK50AQHYS06Q180	6	180	114	13	25.0	46	42	125	27
HSK50AQHYS08Q105	8	105	38	15	19.0	46	42	53	27
HSK50AQHYS08Q150	8	150	84	15	23.9	46	42	95	27
HSK50AQHYS08Q165	8	165	99	15	25.4	46	42	110	27
HSK50AQHYS08Q180	8	180	114	15	27.0	46	42	125	27
HSK50AQHYS10Q120	10	120	53	17	22.6	46	42	67	33
HSK50AQHYS10Q150	10	150	84	17	25.9	46	42	95	33
HSK50AQHYS10Q165	10	165	99	17	27.4	46	42	110	33
HSK50AQHYS10Q180	10	180	114	17	29.0	46	42	125	33
HSK50AQHYS12Q120	12	120	53	19	24.6	46	42	67	36
HSK50AQHYS12Q150	12	150	84	19	27.9	46	42	95	36
HSK50AQHYS12Q165	12	165	99	19	29.4	46	42	110	36
HSK50AQHYS12Q180	12	180	114	19	31.0	46	42	125	36

HSK Hydraulic Chuck, Slim

A	RPM	
≤0.003	G2.5/25000	AD

Type1

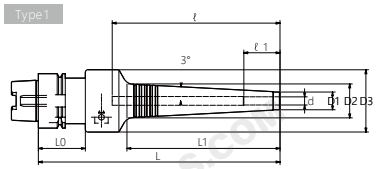

Type2

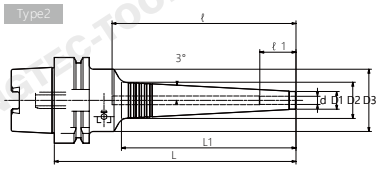

Size	Tapy	d	L	L1	D1	D2	D3	L0	ℓ	ℓ1
HSK63AQHYS03Q80	2	3	80	28	11	14.0	46	-	58	16
HSK63AQHYS03Q90	2	3	90	37	11	14.9	46	-	68	16
HSK63AQHYS03Q135	2	3	135	84	11	19.9	46	-	113	16
HSK63AQHYS04Q80	2	4	80	28	11	14.0	46	-	58	19
HSK63AQHYS04Q90	2	4	90	37	11	14.9	46	-	68	19
HSK63AQHYS04Q135	2	4	135	84	11	19.9	46	-	113	19
HSK63AQHYS06Q90	2	6	90	38	13	17.0	46	-	53	27
HSK63AQHYS06Q135	2	6	135	84	13	21.9	46	-	92	27
HSK63AQHYS06Q150	2	6	150	99	13	23.4	46	-	107	27
HSK63AQHYS06Q165	2	6	165	114	13	25.0	46	-	122	27
HSK63AQHYS06Q180	2	6	180	130	13	26.7	46	-	137	27
HSK63AQHYS08Q90	2	8	90	38	15	19.0	46	-	53	27
HSK63AQHYS08Q135	2	8	135	84	15	23.9	46	-	92	27
HSK63AQHYS08Q150	2	8	150	99	15	25.4	46	-	107	27
HSK63AQHYS08Q165	2	8	165	114	15	27.0	46	-	122	27
HSK63AQHYS08Q180	2	8	180	130	15	28.7	46	-	137	27
HSK63AQHYS10Q105	2	10	105	53	17	22.6	46	-	67	33
HSK63AQHYS10Q135	2	10	135	84	17	25.9	46	-	92	33
HSK63AQHYS10Q150	2	10	150	99	17	27.4	46	-	107	33
HSK63AQHYS10Q165	2	10	165	114	17	29.0	46	-	122	33
HSK63AQHYS10Q180	2	10	180	130	17	30.7	46	-	137	33
HSK63AQHYS12Q105	2	12	105	53	19	24.6	46	-	67	36
HSK63AQHYS12Q135	2	12	135	84	19	27.9	46	-	92	36
HSK63AQHYS12Q150	2	12	150	99	19	29.4	46	-	107	36
HSK63AQHYS12Q165	2	12	165	114	19	31.0	46	-	122	36
HSK63AQHYS12Q180	2	12	180	130	19	32.7	46	-	137	36
HSK63AQHYS16Q135	2	16	135	84	23	31.9	52.5	-	91	40
HSK63AQHYS16Q165	2	16	165	114	23	35.0	52.5	-	120	40
HSK63AQHYS16Q180	2	16	180	129	23	36.6	52.5	-	135	40
HSK63AQHYS20Q150	1	20	150	84	28	36.9	60	42	91	40
HSK63AQHYS20Q180	1	20	180	114	28	40.0	60	42	120	40
HSK63AQHYS20Q195	1	20	195	129	28	41.6	60	42	135	40
HSK63AQHYS25Q150	1	25	150	84	37	45.9	60	42	91	50
HSK63AQHYS25Q180	1	25	180	114	37	49.0	60	42	120	50
HSK63AQHYS25Q195	1	25	195	129	37	50.6	60	42	135	50

HSK Hydraulic Chuck, Slim

A ↗	RPM	AD
≤0.003	G2.5/25000	

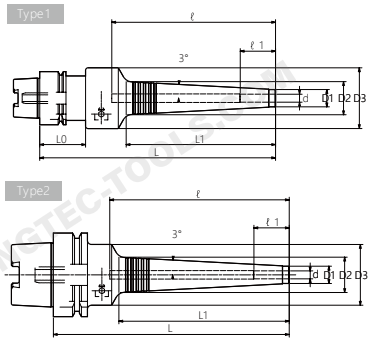

Size	Tapy	d	L	L1	D1	D2	D3	L0	ℓ	ℓ1
HSK100AQHYS06Q105	2	6	105	38	13	17.0	46	-	53	27
HSK100AQHYS06Q150	2	6	150	84	13	21.9	46	-	92	27
HSK100AQHYS06Q165	2	6	165	99	13	23.4	46	-	107	27
HSK100AQHYS06Q180	2	6	180	114	13	25.0	46	-	122	27
HSK100AQHYS06Q195	2	6	195	130	13	26.7	46	-	137	27
HSK100AQHYS08Q105	2	8	105	38	15	19.0	46	-	53	27
HSK100AQHYS08Q150	2	8	150	84	15	23.9	46	-	92	27
HSK100AQHYS08Q165	2	8	165	99	15	25.4	46	-	107	27
HSK100AQHYS08Q180	2	8	180	114	15	27.0	46	-	122	27
HSK100AQHYS08Q195	2	8	195	130	15	28.7	46	-	137	27
HSK100AQHYS10Q150	2	10	150	84	17	25.9	46	-	92	33
HSK100AQHYS10Q165	2	10	165	99	17	27.4	46	-	107	33
HSK100AQHYS10Q180	2	10	180	114	17	29.0	46	-	122	33
HSK100AQHYS10Q195	2	10	195	130	17	30.7	46	-	137	33
HSK100AQHYS12Q150	2	12	150	84	19	27.9	46	-	92	36
HSK100AQHYS12Q165	2	12	165	99	19	29.4	46	-	107	36
HSK100AQHYS12Q180	2	12	180	114	19	31.0	46	-	122	36
HSK100AQHYS12Q195	2	12	195	130	19	32.7	46	-	137	36
HSK100AQHYS16Q150	2	16	150	84	23	31.9	52.5	-	91	40
HSK100AQHYS16Q180	2	16	180	114	23	35.0	52.5	-	120	40
HSK100AQHYS16Q195	2	16	195	129	23	36.6	52.5	-	135	40
HSK100AQHYS20Q150	2	20	150	84	28	36.9	60	-	91	40
HSK100AQHYS20Q180	2	20	180	114	28	40.0	60	-	120	40
HSK100AQHYS20Q195	2	20	195	129	28	41.6	60	-	135	40
HSK100AQHYS25Q150	2	25	150	84	37	45.9	60	-	91	50
HSK100AQHYS25Q180	2	25	180	114	37	49.0	60	-	120	50
HSK100AQHYS25Q195	2	25	195	129	37	50.6	60	-	135	50

Hydraulic Chuck, Slim

A ↗	RPM	
≤0.003	G2.5/25000	AD

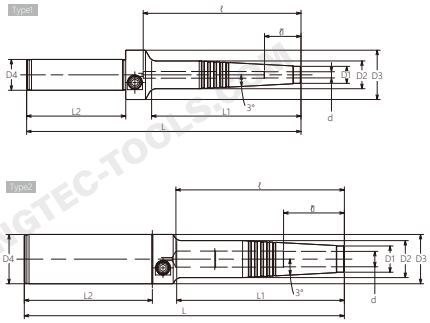

Size	Type	d	L	L1	L2	D1	D2	D3	D4	ℓ	ℓ1
C20QHYS03Q180	1	3	180	98	65	11	18	32	20	103	16
C20QHYS04Q180	1	4	180	98	65	11	18	32	20	103	19
C20QHYS06Q180	1	6	180	99	65	13	20	32	20	103	27
C20QHYS08Q180	1	8	180	99	65	15	22	32	20	101	27
C20QHYS10Q180	1	10	180	100	65	17	24	32	20	101	33
C20QHYS12Q180	1	12	180	100	65	19	26	32	20	101	36
C32QHYS06Q210	2	6	210	109	84	13	20	32	32	113	27
C32QHYS08Q210	2	8	210	109	84	15	22	32	32	111	27
C32QHYS10Q210	2	10	210	110	84	17	24	32	32	111	33
C32QHYS12Q210	2	12	210	110	84	19	26	32	32	111	36

Hydraulic Chuck For CNC automatic lathe

Type1

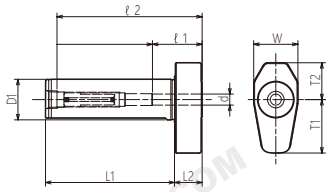

Type2

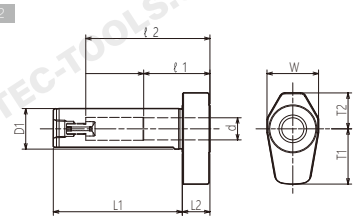

Size	Type	d	D1	L1	L2	W	T1	T2	ℓ1	ℓ2
ST16LQHYS03Q50	1	3	16	50	15	22	23	17.5	16	58
ST16LQHYS04Q50	1	4	16	50	15	22	23	17.5	19	58
ST16LQHYS06Q50	1	6	16	50	15	22	24.5	18.5	27	58
ST16LQHYS08Q50	2	8	16	50	15	24	25.5	19.5	27	47
ST19.05LQHYS03Q60	1	3	19.05	60	15	22	23	17.5	16	68
ST19.05LQHYS04Q60	1	4	19.05	60	15	22	23	17.5	19	68
ST19.05LQHYS06Q60	1	6	19.05	60	15	22	24.5	18.5	27	68
ST19.05LQHYS08Q60	2	8	19.05	60	15	24	25.5	19.5	27	57
ST19.05LQHYS10Q60	2	10	19.05	60	15	26	26.5	20.5	33	60
ST20LQHYS03Q70	1	3	20	70	15	22	23	17.5	16	78
ST20LQHYS04Q70	1	4	20	70	15	22	23	17.5	19	78
ST20LQHYS06Q70	1	6	20	70	15	22	24.5	18.5	27	78
ST20LQHYS08Q70	2	8	20	70	15	24	25.5	19.5	27	64
ST20LQHYS10Q70	2	10	20	70	15	26	26.5	20.5	33	67
ST22LQHYS03Q70	1	3	22	70	15	24	23	17.5	16	78
ST22LQHYS04Q70	1	4	22	70	15	24	23	17.5	19	78
ST22LQHYS06Q70	1	6	22	70	15	24	24.5	18.5	27	78
ST22LQHYS08Q70	2	8	22	70	15	24	25.5	19.5	27	64
ST22LQHYS10Q70	2	10	22	70	15	26	26.5	20.5	33	67
ST22LQHYS12Q70	2	12	22	70	15	28	29	21.5	36	67
ST25LQHYS03Q70	1	3	25	70	15	28	23	17.5	16	78
ST25LQHYS04Q70	1	4	25	70	15	28	23	17.5	19	78
ST25LQHYS06Q70	1	6	25	70	15	28	24.5	18.5	27	78
ST25LQHYS08Q70	2	8	25	70	15	28	25.5	19.5	27	64
ST25LQHYS10Q70	2	10	25	70	15	28	26.5	20.5	33	67
ST25LQHYS12Q70	2	12	25	70	15	28	29	21.5	36	67
ST25.4LQHYS03Q70	1	3	25.4	70	15	28	23	17.5	16	78
ST25.4LQHYS04Q70	1	4	25.4	70	15	28	23	17.5	19	78
ST25.4LQHYS06Q70	1	6	25.4	70	15	28	24.5	18.5	27	78
ST25.4LQHYS08Q70	2	8	25.4	70	15	28	25.5	19.5	27	64
ST25.4LQHYS10Q70	2	10	25.4	70	15	28	26.5	20.5	33	67
ST25.4LQHYS12Q70	2	12	25.4	70	15	28	29	21.5	36	67

BT Hydraulic Chuck, Short

A ↗	RPM	AD
≤0.003	G2.5/25000	

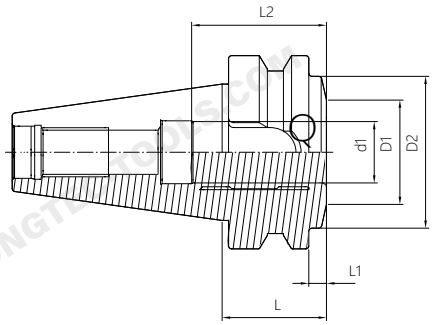

Size	d1	D	D2	L	L1	L2	G
BT40QHY20Q32.5	20	34	49.5	32.5	5.5	42	-

SK Hydraulic Chuck, Short

A ↗	RPM	AD
≤0.003	G2.5/25000	

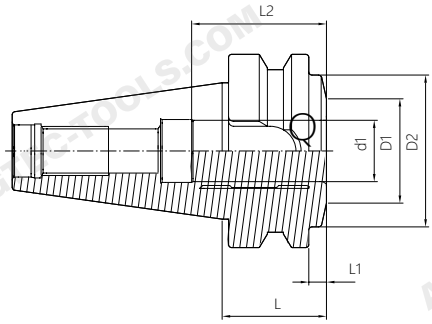

Size	d1	D	D2	L	L1	L2	G
SK40QHY20Q24.6	20	34	49.5	24.6	5.5	42	-
SK50QHY32Q30.9	32	44.5	70.5	30.9	11.85	55	-

BT Hydraulic Chuck, for Mould

A	RPM	
≤0.003	G2.5/25000	AD

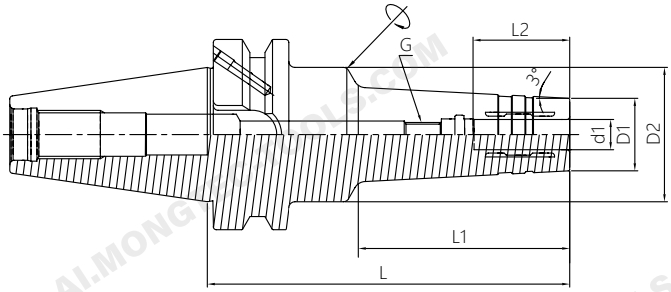

Size	d1	D1	D2	L	L1	L2	G
BT40QHYM06Q120	6	20	44.5	120	70	27	M5
BT40QHYM06Q150	6	20	44.5	150	100	27	M5
BT40QHYM08Q120	8	22	44.5	120	70	27	M6
BT40QHYM08Q150	8	22	44.5	150	100	27	M6
BT40QHYM10Q120	10	24	44.5	120	70	32	M8×1
BT40QHYM10Q150	10	24	44.5	150	100	32	M8×1
BT40QHYM12Q120	12	25	44.5	120	70	37	M10×1
BT40QHYM12Q150	12	25	44.5	150	100	37	M10×1
BT40QHYM16Q120	16	32	44.5	120	70	42	M12×1
BT40QHYM16Q150	16	32	44.5	150	100	42	M12×1
BT40QHYM20Q120	20	34	43.8	120	93	42	M16×1
BT40QHYM20Q150	20	34	46.9	150	123	42	M16×1
BT50QHYM06Q150	6	20	50	150	90	27	M5
BT50QHYM08Q150	8	22	50	150	90	27	M6
BT50QHYM10Q150	10	24	50	150	90	32	M8×1
BT50QHYM12Q150	12	25	50	150	90	37	M10×1
BT50QHYM16Q150	16	32	50	150	90	42	M12×1
BT50QHYM20Q150	20	34	50	150	90	42	M16×1

SK Hydraulic Chuck, for Mould

A ↗	RPM	AD
≤0.003	G2.5/25000	

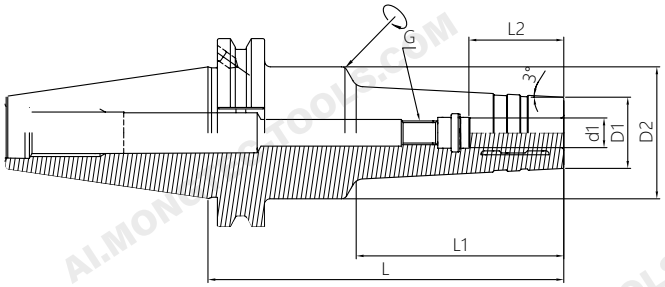

Size	d1	D1	D2	L	L1	L2	G
SK40QHYM06Q120	6	20	49.5	120	70	27	M5
SK40QHYM06Q150	6	20	49.5	150	100	27	M5
SK40QHYM08Q120	8	22	49.5	120	70	27	M6
SK40QHYM08Q150	8	22	49.5	150	100	27	M6
SK40QHYM10Q120	10	24	44.5	120	70	32	M8×1
SK40QHYM10Q150	10	24	44.5	150	100	32	M8×1
SK40QHYM12Q120	12	25	44.5	120	70	37	M10×1
SK40QHYM12Q150	12	25	44.5	150	100	37	M10×1
SK40QHYM16Q120	16	32	49.5	120	70	42	M12×1
SK40QHYM16Q150	16	32	49.5	150	100	42	M12×1
SK40QHYM20Q120	20	34	49.5	120	70	42	M16×1
SK40QHYM20Q150	20	34	49.5	150	100	42	M16×1
SK50QHYM06Q150	6	20	44.5	150	100	27	M5
SK50QHYM08Q150	8	22	44.5	150	100	27	M6
SK50QHYM10Q150	10	24	44.5	150	100	32	M8×1
SK50QHYM12Q150	12	25	44.5	150	100	37	M10×1
SK50QHYM16Q150	16	32	44.5	150	100	42	M12×1
SK50QHYM20Q150	20	34	44.5	150	100	42	M16×1

HSK Hydraulic Chuck, for Mould

A ↗	RPM	AD
≤0.003	G2.5/25000	

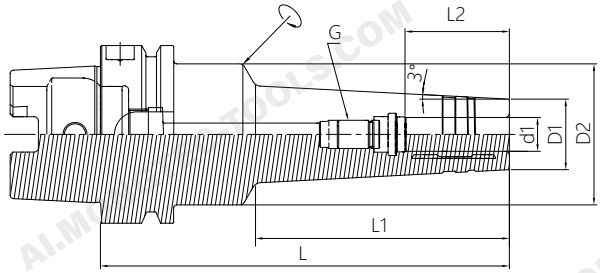

Size	d1	D1	D2	L	L1	L2	G
HSK63AQHYM06Q145	6	20	50	145	90	27	M5
HSK63AQHYM08Q145	8	22	50	145	90	27	M6
HSK63AQHYM10Q145	10	24	50	145	90	32	M8×1
HSK63AQHYM12Q145	12	25	50	145	90	37	M10×1
HSK63AQHYM16Q145	16	32	50	145	90	42	M12×1
HSK63AQHYM20Q145	20	34	50	145	90	42	M16×1
HSK100AQHYM06Q150	6	20	50	150	90	27	M5
HSK100AQHYM08Q150	8	22	50	150	90	27	M6
HSK100AQHYM10Q150	10	24	50	150	90	32	M8×1
HSK100AQHYM12Q150	12	25	50	150	90	37	M10×1
HSK100AQHYM16Q150	16	32	50	150	90	42	M12×1
HSK100AQHYM20Q150	20	34	50	150	90	42	M16×1

SK Hydraulic Chuck, for Grind

A ↗	RPM	
≤0.003	G2.5/25000	AD

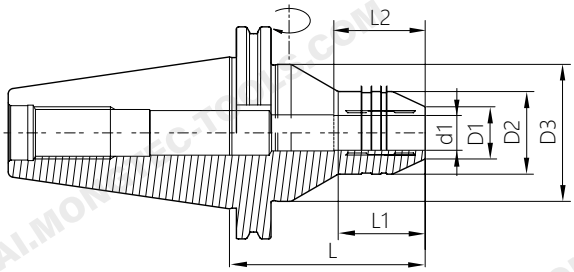

Size	d1	D1	D2	D3	L	L1	L2
SK50QHYG06Q90	6	14	30	63	90	30	27
SK50QHYG08Q90	8	16	30	63	90	30	27
SK50QHYG10Q90	10	18	30	63	90	30	32
SK50QHYG12Q90	12	21	33	63	90	35	37
SK50QHYG14Q90	14	22	35	63	90	35	37
SK50QHYG16Q90	16	24	38	63	90	40	42
SK50QHYG18Q90	18	26	40	63	90	40	42
SK50QHYG20Q110	20	29	42	63	110	40	42
SK50QHYG25Q110	25	34	50	70	110	45	48
SK50QHYG32Q110	32	42	56	80	110	50	55

MTB Hydraulic Chuck

A ↗	RPM	
≤0.003	G2.5/25000	AD

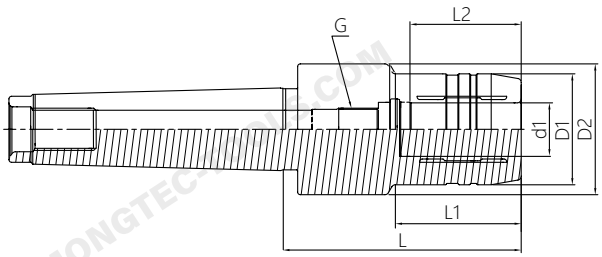

Size	d1	D1	D2	L	L1	L2	G
MTB4QHY20Q90	20	42	49.5	90	47.5	42	M16×1
MTB4QHY32Q90	32	72	72	90	-	55	-
MTB5QHY20Q90	20	42	49.5	90	47.5	42	M16×1
MTB5QHY32Q90	32	72	72	90	-	55	-

Hydraulic Chuck, Module

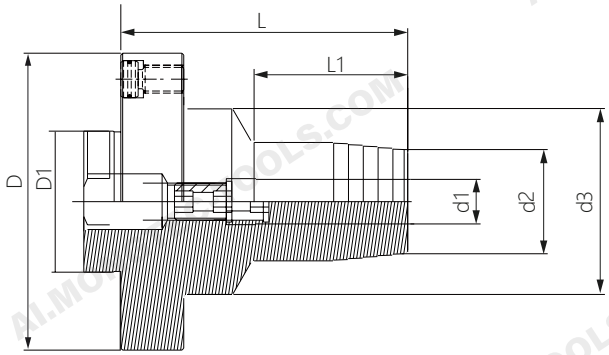

Size	D	D1	d1	d2	d3	L1	L
MOD60QHY06Q80	60	53	06	26	40	30	80
MOD60QHY08Q80	60	53	08	28	40	30	80
MOD60QHY10Q80	60	53	10	30	40	35	80
MOD60QHY12Q80	60	53	12	32	40	40	80
MOD70QHY06Q80	70	53	06	26	40	30	80
MOD70QHY08Q80	70	53	08	28	40	30	80
MOD70QHY10Q80	70	53	10	30	40	35	80
MOD70QHY12Q80	70	53	12	32	40	40	80
MOD80QHY06Q80	80	63	06	26	50	24	80
MOD80QHY08Q80	80	63	08	28	50	25	80
MOD80QHY10Q80	80	63	10	30	50	35	80
MOD80QHY12Q80	80	63	12	32	50	44.5	80
MOD80QHY16Q80	80	63	16	38	50	46	80
MOD80QHY20Q80	80	63	20	42	50	47.5	80
MOD100QHY12Q80	100	82	12	35	50	44.5	80
MOD100QHY16Q80	100	82	16	38	50	46	80
MOD100QHY20Q80	100	82	20	42	50	47.5	80
MOD100QHY25Q90	100	82	25	57	63	59	90
MOD117QHY32Q100	117	Q	32	Q	Q	Q	100

Hydraulic Collet

A ↗
≤0.003

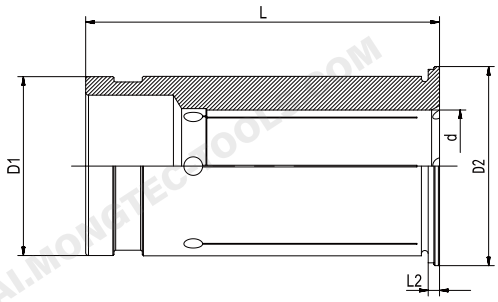

Size	d1	D1	D2	L	L2
HY12SQ03	3	12	16.5	47	2
HY12SQ04	4	12	16.5	47	2
HY12SQ05	5	12	16.5	47	2
HY12SQ06	6	12	16.5	47	2
HY12SQ07	7	12	16.5	47	2
HY12SQ08	8	12	16.5	47	2
HY20SQ03	3	20	24	52.5	2
HY20SQ04	4	20	24	52.5	2
HY20SQ05	5	20	24	52.5	2
HY20SQ06	6	20	24	52.5	2
HY20SQ07	7	20	24	52.5	2
HY20SQ08	8	20	24	52.5	2
HY20SQ09	9	20	24	52.5	2
HY20SQ10	10	20	24	52.5	2
HY20SQ11	11	20	24	52.5	2
HY20SQ12	12	20	24	52.5	2
HY20SQ13	13	20	24	52.5	2
HY20SQ14	14	20	24	52.5	2
HY20SQ15	15	20	24	52.5	2
HY20SQ16	16	20	24	52.5	2

Hydraulic Collet

A ↗
≤0.003

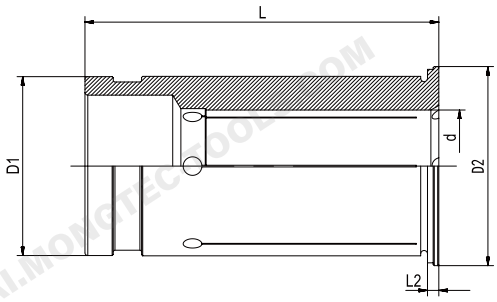

Size	d1	D1	D2	L	L2
HY32SQ06	6	32	35.5	62.5	2
HY32SQ07	7	32	35.5	62.5	2
HY32SQ08	8	32	35.5	62.5	2
HY32SQ09	9	32	35.5	62.5	2
HY32SQ10	10	32	35.5	62.5	2
HY32SQ11	11	32	35.5	62.5	2
HY32SQ12	12	32	35.5	62.5	2
HY32SQ13	13	32	35.5	62.5	2
HY32SQ14	14	32	35.5	62.5	2
HY32SQ15	15	32	35.5	62.5	2
HY32SQ16	16	32	35.5	62.5	2
HY32SQ17	17	32	35.5	62.5	2
HY32SQ18	18	32	35.5	62.5	2
HY32SQ19	19	32	35.5	62.5	2
HY32SQ20	20	32	35.5	62.5	2
HY32SQ21	21	32	35.5	62.5	2
HY32SQ22	22	32	35.5	62.5	2
HY32SQ23	23	32	35.5	62.5	2
HY32SQ24	24	32	35.5	62.5	2
HY32SQ25	25	32	35.5	62.5	2

Hydraulic Collet with Coolant Channels

A ↗
≤0.003

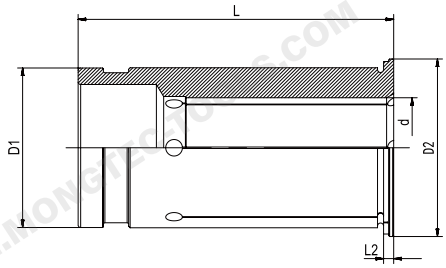

Size	d1	D1	D2	L	L2
HY12SQ03K	3	12	16.5	47	2
HY12SQ04K	4	12	16.5	47	2
HY12SQ05K	5	12	16.5	47	2
HY12SQ06K	6	12	16.5	47	2
HY12SQ07K	7	12	16.5	47	2
HY12SQ08K	8	12	16.5	47	2
HY20SQ03K	3	20	24	52.5	2
HY20SQ04K	4	20	24	52.5	2
HY20SQ05K	5	20	24	52.5	2
HY20SQ06K	6	20	24	52.5	2
HY20SQ07K	7	20	24	52.5	2
HY20SQ08K	8	20	24	52.5	2
HY20SQ09K	9	20	24	52.5	2
HY20SQ10K	10	20	24	52.5	2
HY20SQ11K	11	20	24	52.5	2
HY20SQ12K	12	20	24	52.5	2
HY20SQ13K	13	20	24	52.5	2
HY20SQ14K	14	20	24	52.5	2
HY20SQ15K	15	20	24	52.5	2
HY20SQ16K	16	20	24	52.5	2

Hydraulic Collet with Coolant Channels

A ↗
≤0.003

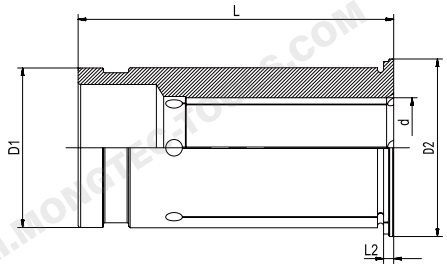

Size	d1	D1	D2	L	L2
HY32SQ06K	6	32	35.5	62.5	2
HY32SQ07K	7	32	35.5	62.5	2
HY32SQ08K	8	32	35.5	62.5	2
HY32SQ09K	9	32	35.5	62.5	2
HY32SQ10K	10	32	35.5	62.5	2
HY32SQ11K	11	32	35.5	62.5	2
HY32SQ12K	12	32	35.5	62.5	2
HY32SQ13K	13	32	35.5	62.5	2
HY32SQ14K	14	32	35.5	62.5	2
HY32SQ15K	15	32	35.5	62.5	2
HY32SQ16K	16	32	35.5	62.5	2
HY32SQ17K	17	32	35.5	62.5	2
HY32SQ18K	18	32	35.5	62.5	2
HY32SQ19K	19	32	35.5	62.5	2
HY32SQ20K	20	32	35.5	62.5	2
HY32SQ21K	21	32	35.5	62.5	2
HY32SQ22K	22	32	35.5	62.5	2
HY32SQ23K	23	32	35.5	62.5	2
HY32SQ24K	24	32	35.5	62.5	2
HY32SQ25K	25	32	35.5	62.5	2

Hydaulic Collet Set

Size	Hydraulic chuck	Hydraulic Collet	Collet Quantity	key Size
BT40QHY20Q5 PCS	BT40QHY20Q90	HY20Q6.8.10.12.16	5pcs	5L
SK40QHY20Q5 PCS	SK40QHY20Q80.5	HY20Q6.8.10.12.16	5pcs	5L
HSK63AQHY20Q5 PCS	HSK63AQHY20Q90	HY20Q6.8.10.12.16	5pcs	5L

Facebook WeChat YouTube Mongtec Web LINE WhatsApp

Mongtec Precision Inc.

TEL : +886-4-22653360

FAX : +886-4-22653386

E-mail : info@mongtec.com

No. 87, Sec. 1, Daqing St., South Dist., Taichung City 402024, Taiwan (R.O.C.)

Ver 2026.09