MONGTEC®
CNC職人のこだわり
MONGTEC-TOOLS.COM

Mongtec HSK-A Tool Holders

mongtec | mongtec-tools.com | ai.mongtec-tools.com | info@mongtec.com

HSK-A TOOLING SYSTEM

ER Collet Chuck with UM Nut 4
ER Collet Chuck with Hex Nut 5
ER Collet Chuck with Mini Nut 6
Power Milling Chuck 7
OZ Collet Chuck 9
TG Collet Chuck 10
Precision Screw Collet Chuck 10
Pull Back Collet Chuck 11
Face Mill Holder Inch 12
Face Mill Holder 13
Combi Shell Mill Holder 16
End Mill Holder Weldon 17
End Mill Holder with Coolant Channels 20
End Mill Holder Whistle Notch 21
Morse Taper Adapter with Tang 22
Morse Taper Adapter with Drawbar 23
Tool Holder Adatper Sleeve 24
APU Drill Chuck Holder 25
Precision Drill Chuck Holder 25
Quick Change Tapping Chuck with Length Compensation 26
Screw-in Milling Cutter Holder 27
Runout Adjustable Flange Adapter 29
UM Adjustable Tool Holder 30
Boring Bar Blank 31
Test Arbor 32
Alignment Tool for ATC Arm 33

ER Collet Chuck with UM Nut

DIN6499	A ↗	RPM	AD
	≤0.003	G2.5/25000	

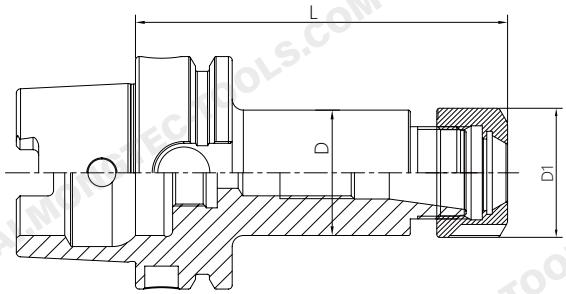

Size	D	D1	L1	Capacity
HSK32AQER16UMQ80	28	32	80	1-10
HSK32AQER20UMQ80	34	35	80	1-13
HSK32AQER25Q80	42	42	80	2-16
HSK32AQER32Q50	50	50	50	3-20
HSK40AQER16UMQ80	28	32	80	1-10
HSK40AQER20UMQ80	34	35	80	1-13
HSK40AQER25Q80	42	42	80	2-16
HSK40AQER32Q80	50	50	80	3-20
HSK50AQER16UMQ80	28	32	80	1-10
HSK50AQER20UMQ80	34	35	80	1-13
HSK50AQER25Q80	42	42	80	2-16
HSK50AQER32Q100	50	50	100	3-20
HSK63AQER16UMQ75	28	32	75	1-10
HSK63AQER20UMQ75	34	35	75	1-13
HSK63AQER25Q75	42	42	75	2-16
HSK63AQER32Q75	50	50	75	3-20
HSK63AQER40Q80	50	63	80	4-26
HSK63AQER16UMQ100	28	32	100	1-10
HSK63AQER20UMQ100	34	35	100	1-13
HSK63AQER25Q100	42	42	100	2-16
HSK63AQER32Q100	50	50	100	3-20
HSK63AQER40Q100	50	63	100	4-26
HSK63AQER16UMQ120	28	32	120	1-10
HSK63AQER20UMQ120	34	35	120	1-13
HSK63AQER25Q120	42	42	120	2-16
HSK63AQER32Q120	50	50	120	3-20
HSK63AQER40Q120	50	63	120	4-26

ER Collet Chuck with UM Nut

DIN6499	A ≤0.003	RPM G2.5/25000	AD

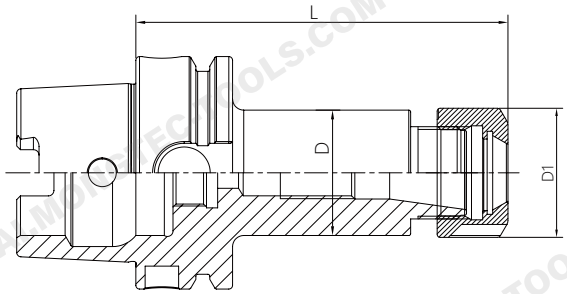

Size	D	D1	L1	Capacity
HSK63AQER16UMQ160T	28	32	160	1-10
HSK63AQER20UMQ160	34	35	160	1-13
HSK63AQER25Q160	42	42	160	2-16
HSK63AQER32Q160	50	50	160	3-20
HSK63AQER40Q160	50	63	160	4-26
HSK63AQER16UMQ200T	28	32	200	1-10
HSK63AQER20UMQ200	34	35	200	1-13
HSK63AQER25Q200	42	42	200	2-16
HSK63AQER32Q200	50	50	200	3-20
HSK63AQER40Q200	50	63	200	4-26
HSK80AQER16UMQ100	28	32	100	1-10
HSK80AQER20UMQ100	34	35	100	1-13
HSK80AQER25Q100	42	42	100	2-16
HSK80AQER32Q100	50	50	100	3-20
HSK80AQER40Q120	50	63	120	4-26
HSK100AQER16UMQ100	28	32	100	1-10
HSK100AQER20UMQ100	34	35	100	1-13
HSK100AQER25Q100	42	42	100	2-16
HSK100AQER32Q100	50	50	100	3-20
HSK100AQER40Q100	63	63	100	4-26
HSK100AQER50Q120	100	78	120	6-34
HSK100AQER16UMQ120T	28	32	120	1-10
HSK100AQER20UMQ120	34	35	120	1-13
HSK100AQER25Q120	42	42	120	2-16
HSK100AQER32Q120	50	50	120	3-20
HSK100AQER40Q120	63	63	120	4-26

ER Collet Chuck with UM Nut

DIN6499	A ↗	RPM	AD
	≤0.003	G2.5/25000	

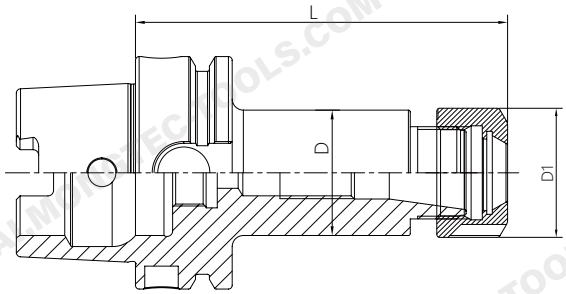

Size	D	D1	L1	Capacity
HSK100AQER16UMQ160T	28	32	160	1-10
HSK100AQER20UMQ160	34	35	160	1-13
HSK100AQER25Q160	42	42	160	2-16
HSK100AQER32Q160	50	50	160	3-20
HSK100AQER40Q160	63	63	160	4-26
HSK100AQER16UMQ200T	28	32	200	1-10
HSK100AQER20UMQ200	34	35	200	1-13
HSK100AQER25Q200	42	42	200	2-16
HSK100AQER32Q200	50	50	200	3-20
HSK100AQER40Q200	63	63	200	4-26
HSK100AQER25Q250	42	42	250	2-16
HSK100AQER32Q250	50	50	250	3-20
HSK100AQER40Q250	63	63	250	4-26
HSK100AQER25Q300	42	42	300	2-16
HSK100AQER32Q300	50	50	300	3-20
HSK100AQER40Q300	63	63	300	4-26

ER Collet Chuck with Hex Nut

DIN6499	A ≤0.003	RPM G2.5/25000	AD

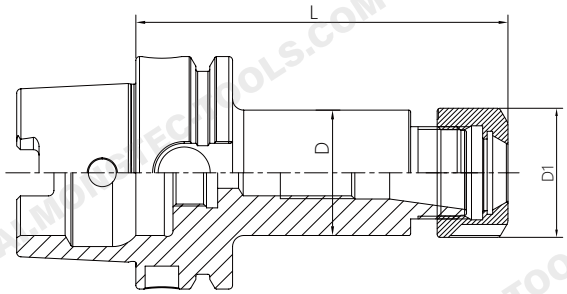

Size	D	D1	L1	Capacity
HSK32AQER16Q80	28	28	80	1-10
HSK32AQER20Q80	34	34	80	1-13
HSK40AQER16Q80	28	28	80	1-10
HSK40AQER20Q80	34	34	80	1-13
HSK50AQER16Q80	28	28	80	1-10
HSK50AQER20Q80	34	34	80	1-13
HSK63AQER16Q75	28	28	75	1-10
HSK63AQER20Q75	34	34	75	1-13
HSK63AQER16Q100	28	28	100	1-10
HSK63AQER20Q100	34	34	100	1-13
HSK63AQER16Q120	28	28	120	1-10
HSK63AQER20Q120	34	34	120	1-13
HSK63AQER16Q160T	28	28	160	1-10
HSK63AQER20Q160	34	34	160	1-13
HSK63AQER16Q200T	28	28	200	1-10
HSK63AQER20Q200	34	34	200	1-13
HSK80AQER16Q100	28	28	100	1-10
HSK80AQER20Q100	34	34	100	1-13
HSK100AQER16Q100	28	28	100	1-10
HSK100AQER20Q100	34	34	100	1-13
HSK100AQER16Q120T	28	28	120	1-10
HSK100AQER20Q120	34	34	120	1-13
HSK100AQER16Q160T	28	28	160	1-10
HSK100AQER20Q160	34	34	160	1-13
HSK100AQER16Q200T	28	28	200	1-10
HSK100AQER20Q200	34	34	200	1-13

ER Collet Chuck with Mini Nut

DIN6499	A ↗	RPM	AD
	≤0.003	G2.5/25000	

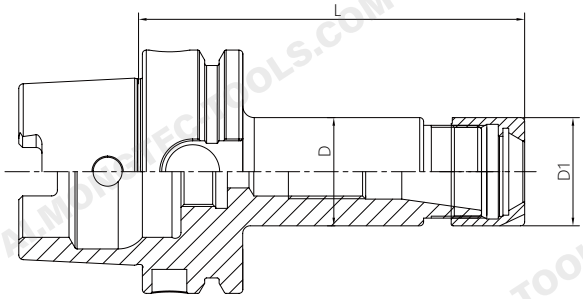

Size	D	D1	L1	Capacity
HSK32AQER11MQ50	16	16	50	1-7
HSK32AQER16MQ50	22	22	50	1-10
HSK32AQER20MQ50	28	28	50	1-13
HSK40AQER11MQ60	16	16	60	1-7
HSK40AQER16MQ60	22	22	60	1-10
HSK40AQER20MQ60	28	28	60	1-13
HSK50AQER11MQ60	16	16	60	1-7
HSK50AQER16MQ60	22	22	60	1-10
HSK50AQER20MQ60	28	28	60	1-13
HSK63AQER11MQ100	16	16	100	1-7
HSK63AQER16MQ100	22	22	100	1-10
HSK63AQER20MQ100	28	28	100	1-13
HSK63AQER25MQ100	35	35	100	2-16
HSK63AQER11MQ160T	16	16	160	1-7
HSK63AQER16MQ160T	22	22	160	1-10
HSK63AQER20MQ160	28	28	160	1-13
HSK63AQER25MQ160	35	35	160	2-16
HSK100AQER16MQ100	22	22	100	1-10
HSK100AQER20MQ100	28	28	100	1-13
HSK100AQER25MQ100	35	35	100	2-16
HSK100AQER16MQ160T	22	22	160	1-10
HSK100AQER20MQ160	28	28	160	1-13
HSK100AQER25MQ160	35	35	160	2-16

Power Milling Chuck

A ↗ ≤0.008

AD

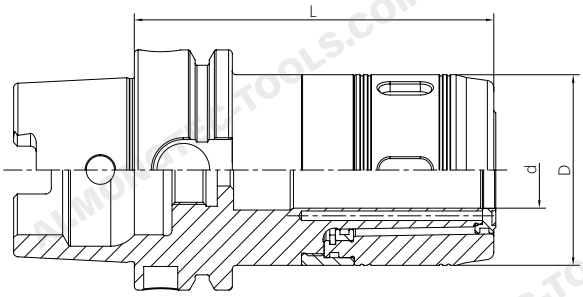

Size	D	D1	L1	Capacity
HSK63AQHC20Q100	20	50	100	3-16; 20
HSK63AQHC25Q100	25	59	100	3-20; 25
HSK63AQHC32Q120	32	72	120	3-25; 32
HSK100AQHC20Q105	20	50	105	3-16; 20
HSK100AQHC25Q105	25	59	105	3-20; 25
HSK100AQHC32Q120	32	72	120	3-25; 32
HSK100AQHC32Q165	32	72	165	3-25; 32
HSK100AQHC32Q200	32	72	200	3-25; 32

Power Milling Chuck

A ≤0.005

AD

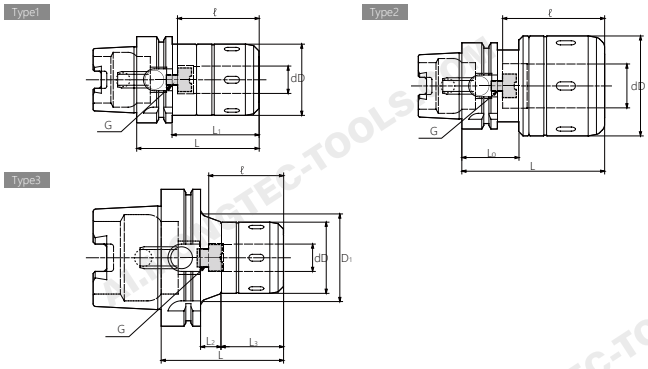

Size	Type	d	D	D1	L	L1	L2	L3	ℓ	L0	Capacity
HSK63AQCT16SAQ90	1	16	45	-	90	64	-	-	60	-	M8
HSK63AQCT20SAQ90	1	20	52	-	90	64	-	-	60	-	M8
HSK63AQCT25SAQ105	2	25	61	-	105	-	-	-	75	42	M8
HSK63AQCT32SAQ105	2	32	73	-	105	-	-	-	75	42	M8
HSK63AQCT32SAQ120	2	32	73	-	120	-	-	-	90	42	M8
HSK100AQCT16SAQ90	3	16	45	56	90	-	16	45	55	-	M10
HSK100AQCT20SAQ105	3	20	52	64	105	-	18	58	70	-	M10
HSK100AQCT25SAQ105	3	25	61	74	105	-	20	56	70	-	M10
HSK100AQCT25SAQ135	3	25	61	74	135	-	50	56	80	-	M10
HSK100AQCT32SAQ105	1	32	73	-	105	76	-	-	70	-	M10
HSK100AQCT32SAQ120	1	32	73	-	120	91	-	-	85	-	M10
HSK100AQCT32SAQ135	1	32	73	-	135	106	-	-	100	-	M10
HSK100AQCT42SAQ105	2	42	88	-	105	-	-	-	70	45	M10
HSK100AQCT42SAQ135	2	42	88	-	135	-	-	-	100	45	M10
HSK100AQCT42SAQ165	2	42	88	-	165	-	-	-	120	45	M10

OZ Collet Chuck

DIN6391	A ↗	RPM	AD
	≤0.005	G2.5/25000	

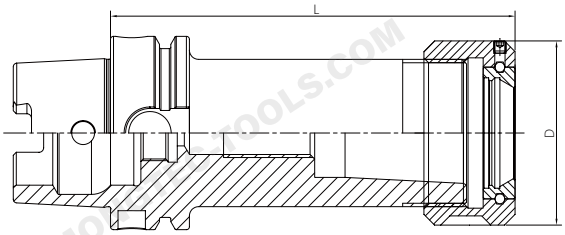

Size	D	L	Capacity
HSK50AQOZ16Q90	43	90	2-16
HSK50AQOZ25Q110	60	110	2-25
HSK63AQOZ16Q100	43	100	2-16
HSK63AQOZ25Q100	60	100	2-25
HSK63AQOZ32Q120	72	120	3-32
HSK100AQOZ16Q110	43	110	2-16
HSK100AQOZ25Q120	60	120	2-25
HSK100AQOZ32Q130	72	130	3-32

High Speed SKS Collet Chuck

A ↗	RPM	AD
≤0.003	G2.5/25000	

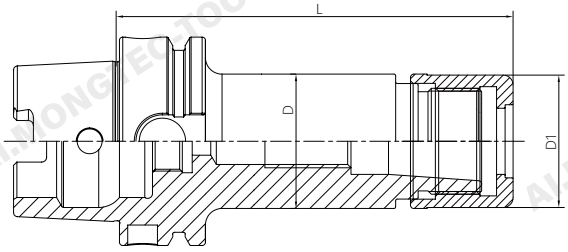

Size	D	D1	L	Capacity	M
HSK63AQSKS10Q90	27.5	27.1	90	2-10	M21.5*1
HSK63AQSKS16Q90	40.6	40	90	3-16	M32*1.5
HSK63AQSKS10Q120	27.5	27.1	120	2-10	M21.5*1
HSK63AQSKS16Q120	40.6	40	120	3-16	M32*1.5
HSK100AQSKS10Q90	27.5	27.1	90	2-10	M21.5*1
HSK100AQSKS16Q90	40.6	40	90	3-16	M32*1.5
HSK100AQSKS10Q120	27.5	27.1	120	2-10	M21.5*1
HSK100AQSKS16Q120	40.6	40	120	3-16	M32*1.5

TG Collet Chuck

A ↗ ≤0.005 | AD

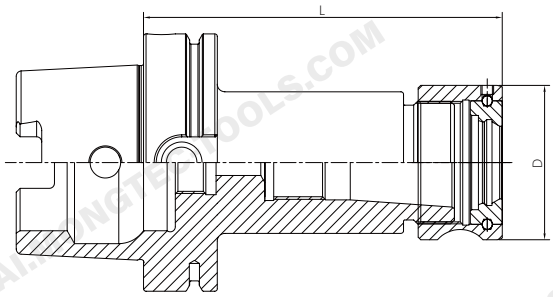

Size	D	L	Collet	Capacity
HSK50AQTG75Q110	50	110	TG 75	2-20
HSK63AQTG75Q120	50	120	TG 75	2-20
HSK63AQTG100Q130	60	130	TG 100	3-25
HSK100AQTG75Q120	50	120	TG 100	3-20
HSK100AQTG100Q130	60	130	TG 100	3-25

Precision Screw Collet Chuck

A ↗ ≤0.003 | RPM G2.5/25000 | AD

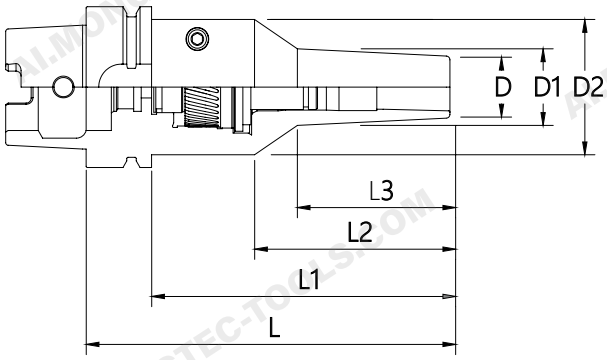

Size	D	D1	D2	L	L1	L2	L3	L4	Capacity
HSK63AQNDC20Q95	40	53	-	95	69	30	19	-	4-20
HSK63AQNDC14Q150	24	30	53	145	119	77	60	-	4-14
HSK100AQNDC32Q140	60	70	-	140	111	14	60	-	12-32

Pull Back Collet Chuck

MONGTEC
mongtec-tools.com

A ↗	RPM	AD
≤0.003	G2.5/25000	

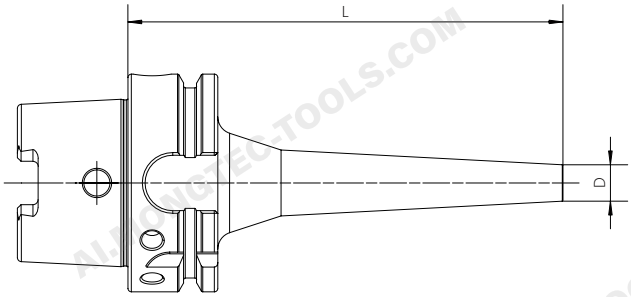

Size	D	L	Capacity
HSK63AQDC06Q60	14	60	1-6
HSK63AQDC06Q90	14	90	1-6
HSK63AQDC06Q120	14	120	1-6
HSK63AQDC06Q150	14	150	1-6
HSK63AQDC08Q60	22	60	1-10
HSK63AQDC08Q90	22	90	1-10
HSK63AQDC08Q120	22	120	1-10
HSK63AQDC08Q150	22	150	1-10
HSK63AQDC08Q200	22	200	1-10
HSK63AQDC12Q90	34	90	1-12
HSK63AQDC12Q120	34	120	1-12
HSK63AQDC12Q150	34	150	1-12
HSK63AQDC12Q200	34	200	1-12
HSK100AQDC06Q110	14	110	1-6
HSK100AQDC06Q150	14	150	1-6
HSK100AQDC08Q110	22	110	1-10
HSK100AQDC08Q150	22	150	1-10
HSK100AQDC08Q200	22	200	1-10
HSK100AQDC12Q120	34	120	1-12
HSK100AQDC12Q150	34	150	1-12
HSK100AQDC12Q200	34	200	1-12

Face Mill Holder Inch

A	RPM	
≤0.005	G2.5/25000	AD

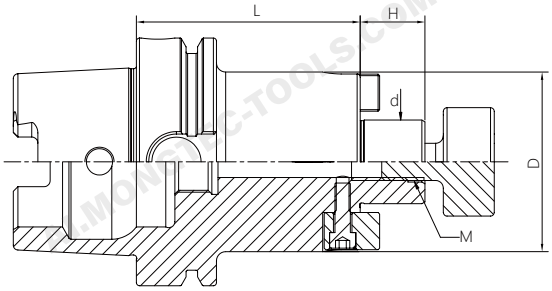

Size	d	D	H	L	M
HSK63AQFMA3/4"Q50	3/4"	42.926	17.45	50	3/8-24
HSK63AQFMA1"Q60	1"	55.626	17.45	60	1/2-20
HSK63AQFMA1Q1/4"Q60	1-1/4"	69.85	17.45	60	5/8-18
HSK63AQFMA1Q1/2"Q60	1-1/2"	78	23.83	60	3/4-16
HSK63AQFMA3/4"Q100	3/4"	42.926	17.45	100	3/8-24
HSK63AQFMA1"Q100	1"	55.626	17.45	100	1/2-20
HSK63AQFMA1Q1/4"Q100	1-1/4"	69.85	17.45	100	5/8-18
HSK63AQFMA1Q1/2"Q100	1-1/2"	78	23.83	100	3/4-16
HSK63AQFMA3/4"Q160	3/4"	42.926	17.45	160	3/8-24
HSK63AQFMA1"Q160	1"	55.626	17.45	160	1/2-20
HSK63AQFMA1Q1/4"Q160	1-1/4"	69.85	17.45	160	5/8-18
HSK63AQFMA1Q1/2"Q160	1-1/2"	78	23.83	160	3/4-16
HSK100AQFMA3/4"Q50	3/4"	42.926	17.45	50	3/8-24
HSK100AQFMA1"Q50	1"	55.626	17.45	50	1/2-20
HSK100AQFMA1Q1/4"Q60	1-1/4"	69.85	17.45	60	5/8-18
HSK100AQFMA1Q1/2"Q60	1-1/2"	78	23.83	60	3/4-16
HSK100AQFMA3/4"Q100	3/4"	42.926	17.45	100	3/8Q24
HSK100AQFMA1"Q100	1"	55.626	17.45	100	1/2-20
HSK100AQFMA1Q1/4"Q100	1-1/4"	69.85	17.45	100	5/8-18
HSK100AQFMA1Q1/2"Q100	1-1/2"	78	23.83	100	3/4-16
HSK100AQFMA3/4"Q160	3/4"	42.926	17.45	160	3/8-24
HSK100AQFMA1"Q160	1"	55.626	17.45	160	1/2-20
HSK100AQFMA1Q1/4"Q160	1-1/4"	69.85	17.45	160	5/8-18
HSK100AQFMA1Q1/2"Q160	1-1/2"	78	23.83	160	3/4-16

Face Mill Holder

DIN6357	A ≤0.005	RPM G2.5/25000	AD

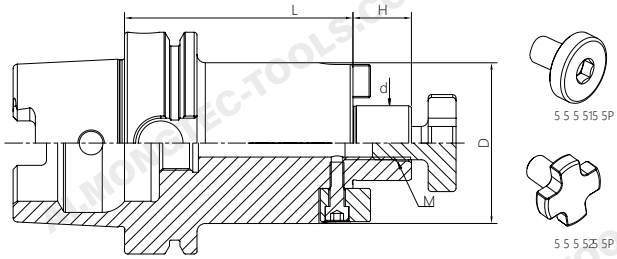

Size	d	D	H	L	M
HSK50AQFMB16Q50	16	38	17	50	M8
HSK50AQFMB22Q60	22	48	19	60	M10
HSK50AQFMB27Q60	27	58	21	60	M12
HSK50AQFMB32Q60	32	78	24	60	M16
HSK63AQFMB16Q50	16	38	17	50	M8
HSK63AQFMB22Q50	22	48	19	50	M10
HSK63AQFMB27Q60	27	58	21	60	M12
HSK63AQFMB32Q60	32	78	24	60	M16
HSK63AQFMB16Q100	16	38	17	100	M8
HSK63AQFMB22Q100	22	48	19	100	M10
HSK63AQFMB27Q100	27	58	21	100	M12
HSK63AQFMB32Q100	32	78	24	100	M16
HSK63AQFMB16Q160	16	38	17	160	M8
HSK63AQFMB22Q160	22	48	19	160	M10
HSK63AQFMB27Q160	27	58	21	160	M12
HSK63AQFMB32Q160	32	78	24	160	M16
HSK63AQFMB16Q200	16	38	17	200	M8
HSK63AQFMB22Q200	22	48	19	200	M10
HSK63AQFMB27Q200	27	58	21	200	M12
HSK63AQFMB32Q200	32	78	24	200	M16
HSK80AQFMB22Q50	22	48	19	50	M10
HSK80AQFMB27Q50	27	58	21	50	M12
HSK80AQFMB32Q60	32	78	24	60	M16

Face Mill Holder

DIN6357	A ≤0.003	RPM G2.5/25000	AD

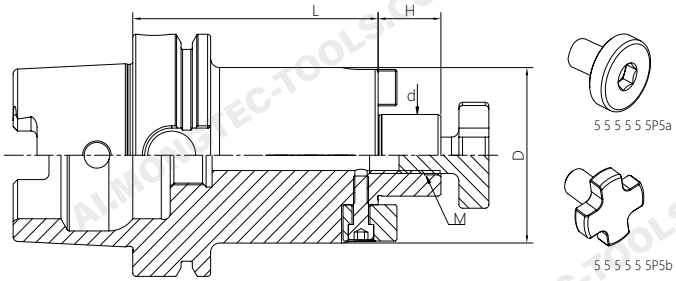

Size	d	D	H	L	M
HSK100AQFMB22Q50	22	48	19	50	M10
HSK100AQFMB27Q50	27	58	21	50	M12
HSK100AQFMB32Q60	32	78	24	60	M16
HSK100AQFMB22Q100	22	48	19	100	M10
HSK100AQFMB27Q100	27	58	21	100	M12
HSK100AQFMB32Q100	32	78	24	100	M16
HSK100AQFMB22Q160	22	48	19	160	M10
HSK100AQFMB27Q160	27	58	21	160	M12
HSK100AQFMB32Q160	32	78	24	160	M16
HSK100AQFMB22Q200	22	48	19	200	M10
HSK100AQFMB27Q200	27	58	21	200	M12
HSK100AQFMB32Q200	32	78	24	200	M16
HSK100AQFMB22Q250	22	48	19	250	M10
HSK100AQFMB27Q250	27	58	21	250	M12
HSK100AQFMB32Q250	32	78	24	250	M16
HSK100AQFMB22Q300	22	48	19	300	M10
HSK100AQFMB27Q300	27	58	21	300	M12
HSK100AQFMB32Q300	32	78	24	300	M16

Face Mill Holder

DIN6357	A ↗	RPM	
	≤0.005	G2.5/25000	AD

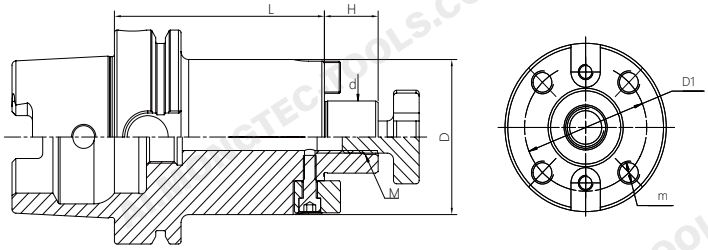

Size	d	D	D1	H	L	M	m
HSK63AQFMB40Q60	40	88	66.7	27	60	M20	M12
HSK63AQFMB40Q100	40	88	66.7	27	100	M20	M12
HSK63AQFMB40Q160	40	88	66.7	27	160	M20	M12
HSK63AQFMB40Q200	40	88	66.7	27	200	M20	M12
HSK80AQFMB40Q60	40	88	66.7	27	60	M20	M12
HSK100AQFMB40Q60	40	88	66.7	27	60	M20	M12
HSK100AQFMB60Q70	60	129	101.6	25	70	M30	M16
HSK100AQFMB40Q100	40	88	66.7	27	100	M20	M12
HSK100AQFMB40Q160	40	88	66.7	27	160	M20	M12
HSK100AQFMB40Q200	40	88	66.7	27	200	M20	M12
HSK100AQFMB40Q250	40	88	66.7	27	250	M20	M12
HSK100AQFMB40Q300	40	88	66.7	27	300	M20	M12

Combi Shell Mill Holder

MONGTEC
mongtec-tools.com

DIN6358	A ↗	RPM
	≤0.005	G2.5/25000

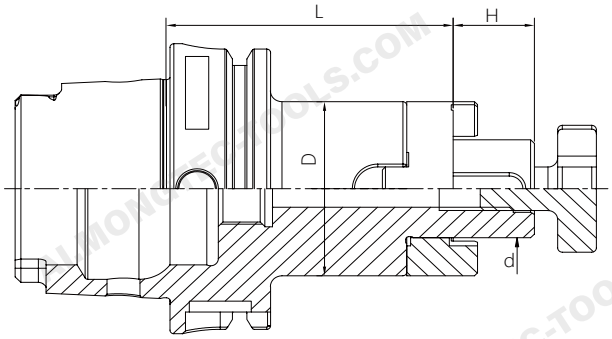

Size	d	D	L	L1
HSK50AQSEMC16Q50	16	32	50	17
HSK50AQSEMC22Q50	22	40	50	19
HSK50AQSEMC27Q65	27	48	65	21
HSK50AQSEMC32Q65	32	58	65	24
HSK63AQSEMC16Q60	16	32	60	17
HSK63AQSEMC22Q60	22	40	60	19
HSK63AQSEMC27Q60	27	48	60	21
HSK63AQSEMC32Q60	32	58	60	24
HSK63AQSEMC40Q70	40	70	70	27
HSK63AQSEMC16Q100	16	32	100	17
HSK63AQSEMC22Q100	22	40	100	19
HSK63AQSEMC27Q100	27	48	100	21
HSK63AQSEMC32Q100	32	58	100	24
HSK80AQSEMC16Q60	16	32	60	17
HSK80AQSEMC22Q60	22	40	60	19
HSK80AQSEMC27Q60	27	48	60	21
HSK80AQSEMC32Q60	32	58	60	24
HSK80AQSEMC40Q70	40	70	70	27
HSK100AQSEMC16Q60	16	32	60	17
HSK100AQSEMC22Q60	22	40	60	19
HSK100AQSEMC27Q60	27	48	60	21
HSK100AQSEMC32Q60	32	58	60	24
HSK100AQSEMC40Q70	40	70	70	27

End Mill Holder Weldon

DIN6359/1835B	A ≤0.005	RPM G2.5/25000	AD

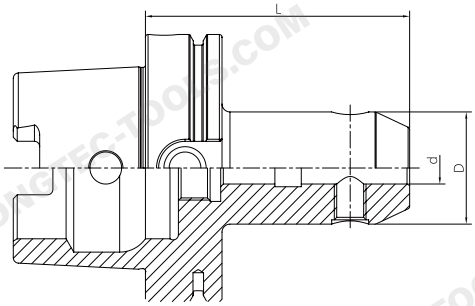

Size	d	D	L	M	Screw Quantity
HSK50AQSLA06Q65	6	25	65	M6	1
HSK50AQSLA08Q65	8	28	65	M8	1
HSK50AQSLA10Q65	10	35	65	M10	1
HSK50AQSLA12Q80	12	42	80	M12	1
HSK50AQSLA14Q80	14	44	80	M12	1
HSK50AQSLA16Q80	16	48	80	M14	1
HSK50AQSLA18Q80	18	50	80	M14	1
HSK50AQSLA20Q80	20	52	80	M16	1
HSK50AQSLA25Q110	25	60	110	M18*2	2
HSK50AQSLA32Q110	32	60	110	M20*2	2

End Mill Holder Weldon

DIN6359/1835B	A ↗	RPM	AD
	≤0.005	G2.5/25000	

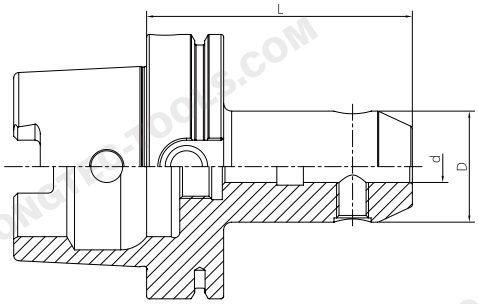

Size	d	D	L	M	Screw Quantity
HSK63AQSLA06Q65	6	25	65	M6	1
HSK63AQSLA08Q65	8	28	65	M8	1
HSK63AQSLA10Q65	10	35	65	M10	1
HSK63AQSLA12Q80	12	42	80	M12	1
HSK63AQSLA14Q80	14	44	80	M12	1
HSK63AQSLA16Q80	16	48	80	M14	1
HSK63AQSLA20Q80	20	52	80	M16	1
HSK63AQSLA25Q110	25	65	110	M18*2	2
HSK63AQSLA32Q110	32	72	110	M20*2	2
HSK63AQSLA40Q125	40	80	125	M20*2	2
HSK63AQSLA06Q100	6	25	100	M6	1
HSK63AQSLA08Q100	8	28	100	M8	1
HSK63AQSLA10Q100	10	35	100	M10	1
HSK63AQSLA14Q100	14	44	100	M12	1
HSK63AQSLA16Q100	16	48	100	M12	1
HSK63AQSLA18Q100	18	50	100	M14	1
HSK63AQSLA20Q100	20	52	100	M16	1
HSK63AQSLA06Q160	6	25	160	M6	1
HSK63AQSLA08Q160	8	28	160	M8	1
HSK63AQSLA10Q160	10	35	160	M10	1
HSK63AQSLA12Q160	12	42	160	M12	1
HSK63AQSLA14Q160	14	44	160	M12	1
HSK63AQSLA16Q160	16	48	160	M14	1
HSK63AQSLA18Q160	18	50	160	M14	1
HSK63AQSLA20Q160	20	52	160	M16	1
HSK63AQSLA25Q160	25	65	160	M18*2	2
HSK63AQSLA32Q160	32	72	160	M20*2	2

End Mill Holder Weldon

DIN6359/1835B	A ↗	RPM	AD
	≤0.005	G2.5/25000	

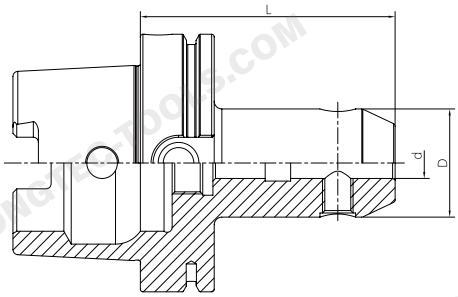

Size	d	D	L	M	Screw Quantity
HSK80AQSLA06Q80	6	25	80	M6	1
HSK80AQSLA08Q80	8	28	80	M8	1
HSK80AQSLA10Q80	10	35	80	M10	1
HSK80AQSLA12Q80	12	42	80	M12	1
HSK80AQSLA14Q80	14	44	80	M12	1
HSK80AQSLA16Q100	16	48	100	M14	1
HSK80AQSLA18Q100	18	50	100	M14	1
HSK80AQSLA20Q100	20	52	100	M16	1
HSK80AQSLA25Q100	25	65	100	M18*2	2
HSK80AQSLA32Q110	32	72	110	M20*2	2
HSK80AQSLA40Q120	40	80	120	M20*2	2
HSK100AQSLA08Q80	8	28	80	M8	1
HSK100AQSLA10Q80	10	35	80	M10	1
HSK100AQSLA12Q80	12	42	80	M12	1
HSK100AQSLA14Q80	14	44	80	M12	1
HSK100AQSLA16Q100	16	48	100	M14	1
HSK100AQSLA18Q100	18	50	100	M14	1
HSK100AQSLA20Q100	20	52	100	M16	1
HSK100AQSLA25Q100	25	65	100	M18*2	2
HSK100AQSLA32Q100	32	72	100	M20*2	2
HSK100AQSLA40Q105	40	80	105	M20*2	2
HSK100AQSLA50Q130	50	100	130	M24*2	2
HSK100AQSLA08Q160	8	28	160	M8	1
HSK100AQSLA10Q160	10	35	160	M10	1
HSK100AQSLA12Q160	12	42	160	M12	1
HSK100AQSLA14Q160	14	44	160	M12	1
HSK100AQSLA16Q160	16	48	160	M14	1
HSK100AQSLA18Q160	18	50	160	M14	1
HSK100AQSLA20Q160	20	52	160	M16	1
HSK100AQSLA25Q160	25	65	160	M18*2	2
HSK100AQSLA32Q160	32	72	160	M20*2	2
HSK100AQSLA40Q160	40	80	160	M20*2	2

End Mill Holder with Coolant Channels

MONGTEC
mongtec-tools.com

DIN6359/1835B	A ↗	RPM	AD
	≤0.005	G2.5/25000	

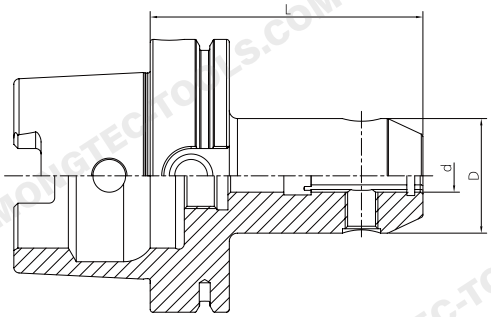

Size	d	D	L	M	Screw Quantity
HSK63AQSLA06Q65K	6	25	65	M6	1
HSK63AQSLA08Q65K	8	28	65	M8	1
HSK63AQSLA10Q65K	10	35	65	M10	1
HSK63AQSLA12Q80K	12	42	80	M12	1
HSK63AQSLA14Q80K	14	44	80	M12	1
HSK63AQSLA16Q80K	16	48	80	M14	1
HSK63AQSLA18Q80K	18	50	80	M14	1
HSK63AQSLA20Q80K	20	52	80	M16	1
HSK63AQSLA25Q110K	25	65	110	M18*2	2
HSK63AQSLA32Q110K	32	72	110	M20*2	2
HSK63AQSLA40Q125K	40	80	125	M20*2	2
HSK100AQSLA06Q80K	6	25	80	M6	1
HSK100AQSLA08Q80K	8	28	80	M8	1
HSK100AQSLA10Q80K	10	35	80	M10	1
HSK100AQSLA12Q80K	12	42	80	M12	1
HSK100AQSLA14Q80K	14	44	80	M12	1
HSK100AQSLA16Q100K	16	48	100	M14	1
HSK100AQSLA18Q100K	18	50	100	M14	1
HSK100AQSLA20Q100K	20	52	100	M16	1
HSK100AQSLA25Q100K	25	65	100	M18*2	2
HSK100AQSLA32Q100K	32	72	100	M20*2	2
HSK100AQSLA40Q105K	40	80	105	M20*2	2

End Mill Holder Whistle Notch

MONGTEC
mongtec-tools.com

DIN1835E	A ↗	RPM	
	≤0.005	G2.5/25000	AD

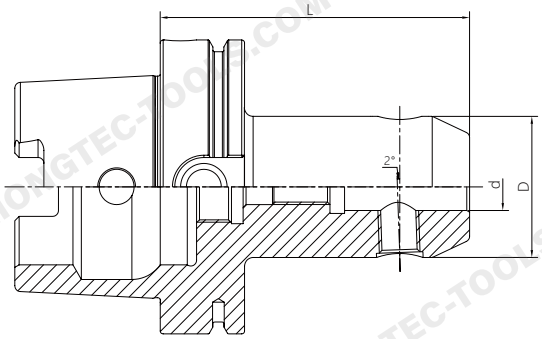

Size	d	D	L	M	Screw Quantity
HSK63AQSLB06Q80	6	25	80	M6	1
HSK63AQSLB08Q80	8	28	80	M8	1
HSK63AQSLB10Q80	10	35	80	M10	1
HSK63AQSLB12Q90	12	42	90	M12	1
HSK63AQSLB14Q90	14	44	90	M12	1
HSK63AQSLB16Q100	16	48	100	M14	1
HSK63AQSLB18Q100	18	50	100	M14	1
HSK63AQSLB20Q100	20	52	100	M16	1
HSK63AQSLB25Q110	25	65	110	M18*2	2
HSK63AQSLB32Q110	32	72	110	M20*2	2
HSK63AQSLB40Q125	40	80	125	M20*2	2
HSK100AQSLB06Q90	6	25	90	M6	1
HSK100AQSLB08Q90	8	28	90	M8	1
HSK100AQSLB10Q90	10	35	90	M10	1
HSK100AQSLB12Q100	12	42	100	M12	1
HSK100AQSLB14Q100	14	44	100	M12	1
HSK100AQSLB16Q100	16	48	100	M14	1
HSK100AQSLB18Q100	18	50	100	M14	1
HSK100AQSLB20Q110	20	52	110	M16	1
HSK100AQSLB25Q120	25	65	120	M18*2	2
HSK100AQSLB32Q120	32	72	120	M20*2	2
HSK100AQSLB40Q120	40	80	120	M20*2	2

Morse Taper Adapter with Tang

DIN6383	A ↗	RPM
	≤0.005	G2.5/25000

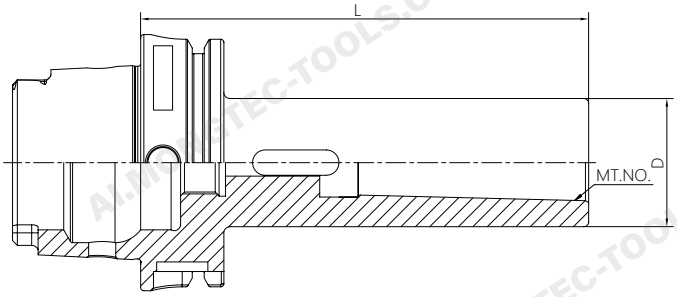

Size	MT. NO.	D	L
HSK50AQMTA1Q100	1	25	100
HSK50AQMTA2Q120	2	32	120
HSK50AQMTA3Q140	3	40	140
HSK63AQMTA1Q100	1	25	100
HSK63AQMTA2Q120	2	32	120
HSK63AQMTA3Q140	3	40	140
HSK63AQMTA4Q160	4	48	160
HSK80AQMTA1Q110	1	25	110
HSK80AQMTA2Q120	2	32	120
HSK80AQMTA3Q140	3	40	140
HSK80AQMTA4Q160	4	48	160
HSK100AQMTA1Q110	1	25	110
HSK100AQMTA2Q120	2	32	120
HSK100AQMTA3Q150	3	40	150
HSK100AQMTA4Q170	4	48	170
HSK100AQMTA5Q200	5	63	200

Morse Taper Adapter with Drawbar

DIN6364	A ↗	RPM
	≤0.005	G2.5/25000

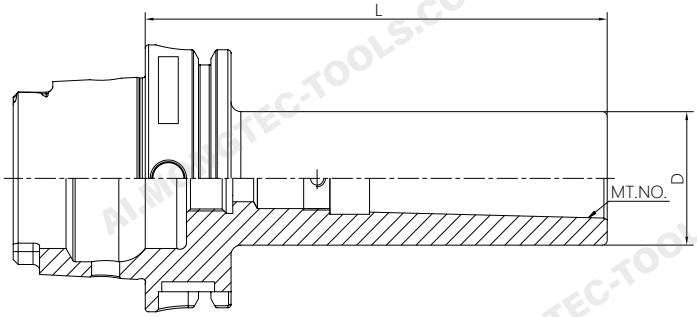

Size	MT. NO.	D	L
HSK50AQMTB1Q100	1	25	100
HSK50AQMTB2Q120	2	32	120
HSK50AQMTB3Q140	3	40	140
HSK63AQMTB1Q100	1	25	100
HSK63AQMTB2Q120	2	32	120
HSK63AQMTB3Q140	3	40	140
HSK63AQMTB4Q160	4	48	160
HSK80AQMTB1Q110	1	25	110
HSK80AQMTB2Q120	2	32	120
HSK80AQMTB3Q150	3	40	150
HSK80AQMTB4Q170	4	48	170
HSK100AQMTB1Q110	1	25	110
HSK100AQMTB2Q120	2	32	120
HSK100AQMTB3Q150	3	40	150
HSK100AQMTB4Q170	4	48	170
HSK100AQMTB5Q200	5	63	200

Tool Holder Adatper Sleeve

A ↗	AD
≤0.005	

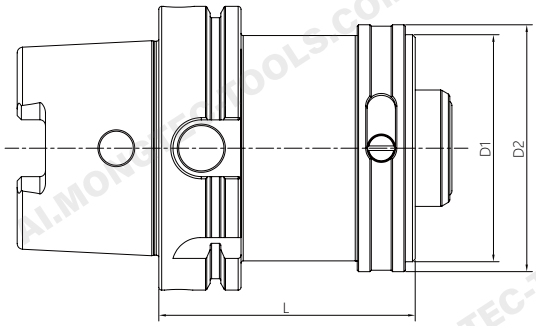

Size	D1	D2	L
HSK50AQHSK50CQ80	50	55	80
HSK50AQHSK50CQ100	50	55	100
HSK63AQHSK63CQ100	63	70	100
HSK63AQHSK63CQ140	63	70	140
HSK80AQHSK80CQ120	80	87	120
HSK80AQHSK80CQ160	80	87	160
HSK100AQHSK100CQ140	100	110	140
HSK100AQHSK100CQ200	100	110	200
HSK50AQHSK32CQ60	32	37	60
HSK50AQHSK32CQ70	40	45	70
HSK63AQHSK32CQ70	32	37	70
HSK63AQHSK40CQ80	40	45	80
HSK63AQHSK50CQ80	50	55	80
HSK80AQHSK40CQ80	40	45	80
HSK80AQHSK50CQ80	50	55	80
HSK80AQHSK63CQ100	63	70	100
HSK100AQHSK50CQ80	50	55	80
HSK100AQHSK63CQ100	63	70	100
HSK100AQHSK80CQ100	80	87	100

APU Drill Chuck Holder

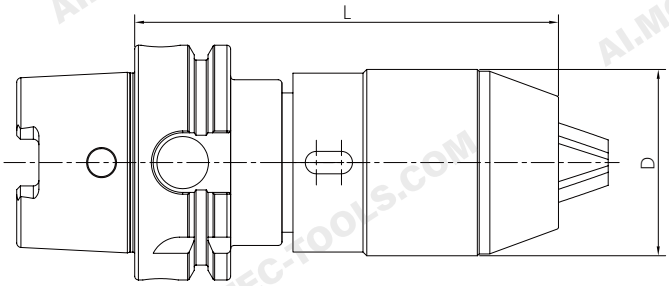

Size	D	L	Capacity
HSK63AQAPU13Q130	48	130	1-13
HSK63AQAPU16Q140	53	140	3-16
HSK100AQAPU13Q140	48	140	1-13
HSK100AQAPU16Q150	53	150	3-16

Precision Drill Chuck Holder

A ↗	RPM
≤0.03	G2.5/25000

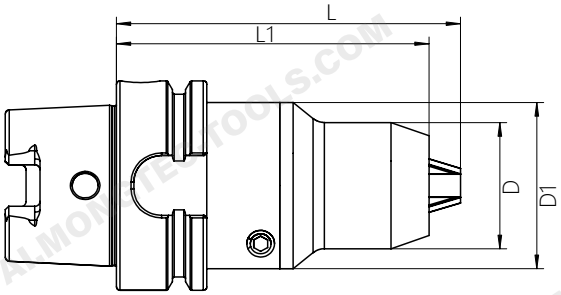

Size	D	D1	L	L1	Capacity
HSK63AQCPU10Q90	38	50	90	32	1-10
HSK63AQCPU13Q100	50	-	100	-	1-13
HSK63AQCPU16Q100	50	-	100	-	1-16
HSK100AQCPU13Q105	50	-	105	-	1-13
HSK100AQCPU16Q105	50	-	105	-	1-16

Quick Change Tapping Chuck with Length Compensation

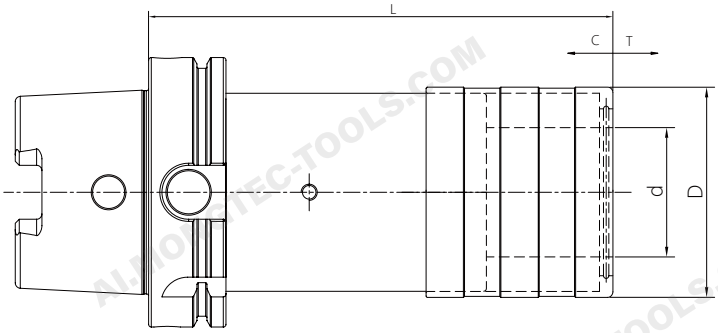

Size	d	D	L	T	C
HSK63AQTC312Q102	19	36	102	7.5	7.5
HSK63AQTC820Q140	31	53	140	12.5	12.5
HSK63AQTC1433Q210	48	78	210	22	22
HSK100AQTC312Q112	19	36	112	7.5	7.5
HSK100AQTC820Q148	31	53	148	12.5	12.5
HSK100AQTC1433Q210	48	78	210	22	22

Screw-in Milling Cutter Holder

MONGTEC
mongtec-tools.com

A ↗	RPM	AD
≤0.005	G2.5/25000	

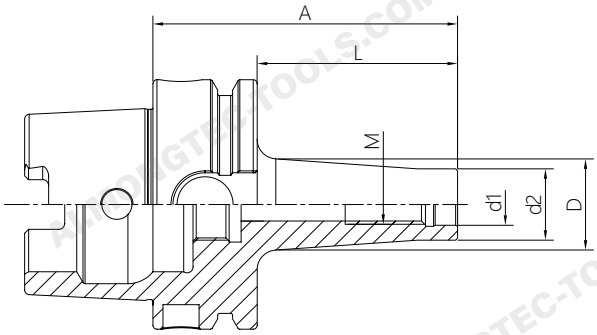

Size	M	d1	d2	A	L	D
HSK63AQSOM08Q51 L=25	8	8.5	14.5	51	25	15
HSK63AQSOM08Q76 L=50	8	8.5	14.5	76	50	23
HSK63AQSOM08Q101 L=75	8	8.5	14.5	101	75	23
HSK63AQSOM10Q51 L=25	10	10.5	18	51	25	20
HSK63AQSOM10Q76 L=50	10	10.5	18	76	50	23
HSK63AQSOM10Q126 L=100	10	10.5	18	126	100	32
HSK63AQSOM10Q176 L=150	10	10.5	18	176	150	36.5
HSK63AQSOM12Q51 L=25	12	12.5	21	51	25	24
HSK63AQSOM12Q76 L=50	12	12.5	21	76	50	34
HSK63AQSOM12Q101 L=75	12	12.5	21	101	75	31
HSK63AQSOM12Q126 L=100	12	12.5	21	126	100	33
HSK63AQSOM12Q176 L=150	12	12.5	21	176	150	40
HSK63AQSOM16Q51 L=25	16	17	29	51	25	29
HSK63AQSOM16Q76 L=50	16	17	29	76	50	34
HSK63AQSOM16Q101 L=75	16	17	29	101	75	34
HSK63AQSOM16Q126 L=100	16	17	29	126	100	36
HSK63AQSOM16Q176 L=150	16	17	29	176	150	42.5
HSK100AQSOM08Q79 L=50	8	8.5	14.5	79	50	23
HSK100AQSOM10Q79 L=50	10	10.5	18	79	50	23
HSK100AQSOM10Q129 L=100	10	10.5	18	129	100	32
HSK100AQSOM10Q179 L=150	10	10.5	18	179	150	36.5
HSK100AQSOM12Q79 L=50	12	12.5	21	79	50	24
HSK100AQSOM12Q129 L=100	12	12.5	21	129	100	33
HSK100AQSOM12Q179 L=150	12	12.5	21	179	150	40
HSK100AQSOM16Q79 L=50	16	17	29	79	50	34
HSK100AQSOM16Q129 L=100	16	17	29	129	100	36
HSK100AQSOM16Q179 L=150	16	17	29	179	150	42.5

Screw-in Milling Cutter Holder

MONGTEC
mongtec-tools.com

A ↗	RPM	
≤0.005	G2.5/25000	AD

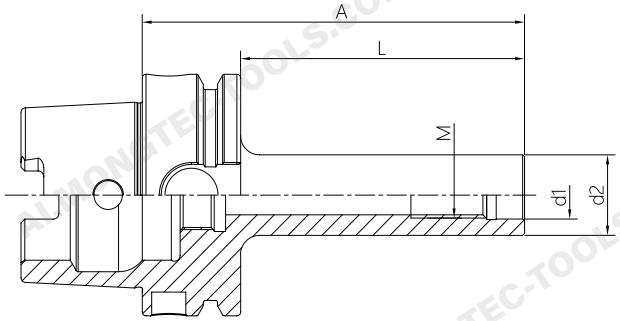

Size	M	d1	d2	A	L
HSK63AQM10Q126 L=100	10	10.5	18	126	100
HSK63AQM10Q176 L=150	10	10.5	18	176	150
HSK63AQM12Q101 L=75	12	12.5	21	101	75
HSK63AQM12Q126 L=100	12	12.5	21	126	100
HSK63AQM12Q176 L=150	12	12.5	21	176	150
HSK63AQM16Q101 L=75	16	17	29	101	75
HSK63AQM16Q126 L=100	16	17	29	126	100
HSK63AQM16Q176 L=150	16	17	29	176	150
HSK100AQM10Q129 L=100	10	10.5	18	129	100
HSK100AQM10Q179 L=150	10	10.5	18	179	150
HSK100AQM12Q129 L=100	12	12.5	21	129	100
HSK100AQM12Q179 L=150	12	12.5	21	179	150
HSK100AQM16Q129 L=100	16	17	29	129	100
HSK100AQM16Q179 L=150	16	17	29	179	150

Runout Adjustable Flange Adapter

MONGTEC
mongtec-tools.com

A ↗	RPM	
≤0.002	G2.5/25000	AD

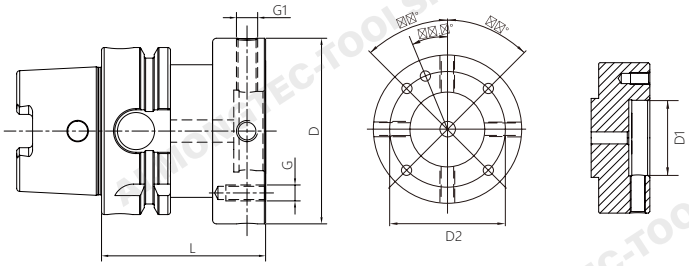

Size	HSK-A	D	D1	D2	L	G	G1
HSK50AQMOD060Q060	50	60	30	44	60	M5	M8x1
HSK50AQMOD070Q060	50	70	35	53	60	M6	M8x1
HSK50AQMOD080Q060	50	80	40	63	60	M6	M8x1
HSK63AQMOD060Q060	63	60	30	44	60	M5	M8x1
HSK63AQMOD070Q060	63	70	35	53	60	M6	M8x1
HSK63AQMOD080Q060	63	80	40	63	60	M6	M8x1
HSK63AQMOD100Q065	63	100	50	79	65	M8	M10x1
HSK63AQMOD117Q065	63	117	60	96	65	M8	M10x1
HSK80AQMOD060Q050	80	60	30	44	50	M5	M8x1
HSK80AQMOD070Q060	80	70	35	53	60	M6	M8x1
HSK80AQMOD080Q060	80	80	40	63	60	M6	M8x1
HSK80AQMOD100Q065	80	100	50	79	65	M8	M10x1
HSK80AQMOD117Q065	80	117	60	96	65	M8	M10x1
HSK80AQMOD140Q075	80	140	80	119	75	M10	M10x1
HSK100AQMOD060Q055	100	60	30	44	55	M5	M8x1
HSK100AQMOD070Q055	100	70	35	53	55	M6	M8x1
HSK100AQMOD080Q055	100	80	40	63	55	M6	M8x1
HSK100AQMOD100Q065	100	100	50	79	65	M8	M10x1
HSK100AQMOD117Q065	100	117	60	96	65	M8	M10x1
HSK100AQMOD140	100	140	80	119	75	M10	M10x1

UM Adjustable Tool Holder

mongtec-tools.com

A ↗	RPM	💧
≤0.003	G2.5/25000	AD

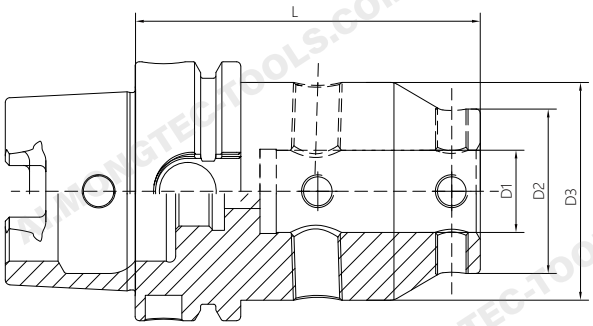

Size	D1	D2	D3	L
HSK50AQUM12Q85	12	28	44.5	85
HSK50AQUM16Q85	16	32	48	85
HSK50AQUM20Q95	20	40	53	95
HSK50AQUM25Q105	25	48	63	105
HSK50AQUM32Q110	32	52	63	110
HSK63AQUM12Q75	12	28	44.5	75
HSK63AQUM16Q75	16	32	48	75
HSK63AQUM20Q85	20	40	53	85
HSK63AQUM25Q105	25	48	63	105
HSK63AQUM32Q110	32	52	63	110
HSK100AQUM12Q80	12	28	44.5	80
HSK100AQUM16Q80	16	32	48	80
HSK100AQUM20Q95	20	40	53	95
HSK100AQUM25Q110	25	48	63	110
HSK100AQUM32Q115	32	52	63	115

Boring Bar Blank

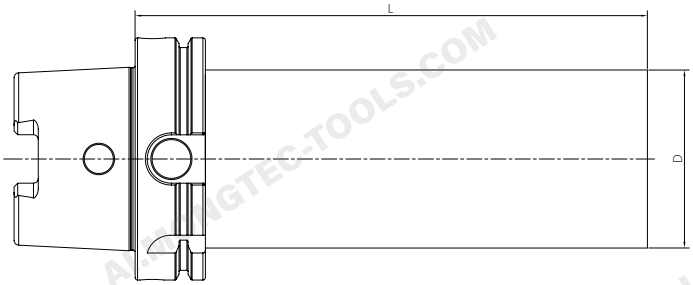

Size	D1	D2
HSK50AQD050Q160	50	160
HSK50AQD065Q200	65	200
HSK63AQD065Q160	65	160
HSK63AQD065Q210	65	210
HSK63AQD065Q250	65	250
HSK63AQD065Q300	65	300
HSK63AQD080Q160	80	160
HSK63AQD080Q210	80	210
HSK63AQD080Q250	80	250
HSK63AQD080Q300	80	300
HSK63AQD100Q160	100	160
HSK63AQD100Q210	100	210
HSK63AQD100Q250	100	250
HSK63AQD100Q300	100	300
HSK63AQD120Q160	120	160
HSK63AQD120Q210	120	210
HSK63AQD120Q250	120	250
HSK63AQD120Q300	120	300
HSK100AQD080Q160	80	160
HSK100AQD080Q210	80	210
HSK100AQD080Q250	80	250
HSK100AQD080Q300	80	300
HSK100AQD100Q160	100	160
HSK100AQD100Q210	100	210
HSK100AQD100Q250	100	250
HSK100AQD100Q300	100	300
HSK100AQD120Q160	120	160
HSK100AQD120Q210	120	210
HSK100AQD120Q250	120	250
HSK100AQD120Q300	120	300

Test Arbor

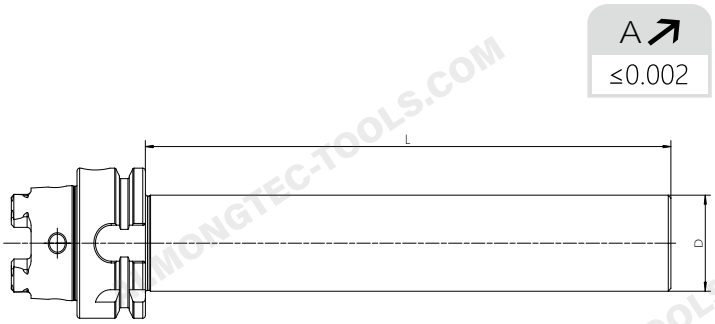

Size	D	L
HSK50AQ32Q200	32	200
HSK63AQ40Q300	40	300
HSK80AQ50Q300	50	300
HSK100AQ50Q300	50	300

Alignment Tool for ATC Arm

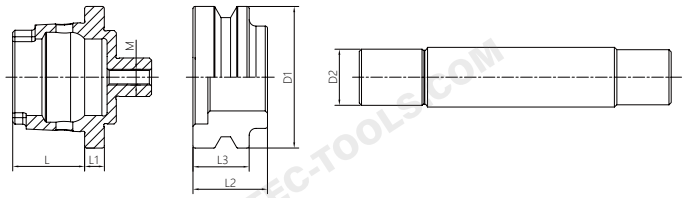

Size	D1	D2	L	L1	L2	L3	M
HSK50AQATCQ25D	50	25	25	8	22	18	M6
HSK63AQATCQ30D	63	30	32	8	30	18	M8
HSK80AQATCQ35D	80	35	40	8	36	18	M10
HSK100AQATCQ40D	100	40	50	10	45	19	M10

Alignment Tool for ATC Arm

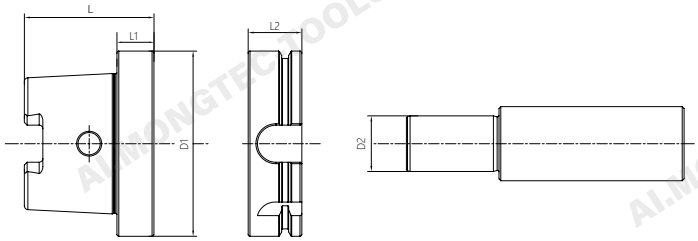

Size	D1	D2	L	L1	L2
HSK63AQATCQ20D	63	20	52	20	26
HSK100AQATCQ30D	100	30	70	20	29

Facebook WeChat YouTube Mongtec Web LINE WhatsApp

Mongtec Precision Inc.

TEL : +886-4-22653360

FAX : +886-4-22653386

E-mail : info@mongtec.com

No. 87, Sec. 1, Daqing St., South Dist., Taichung City 402024, Taiwan (R.O.C.)

Ver 2026.09