MONGTEC®
CNC職人のこだわり
MONGTEC-TOOLS.COM

Mongtec
Shrink Fit Tool Holders

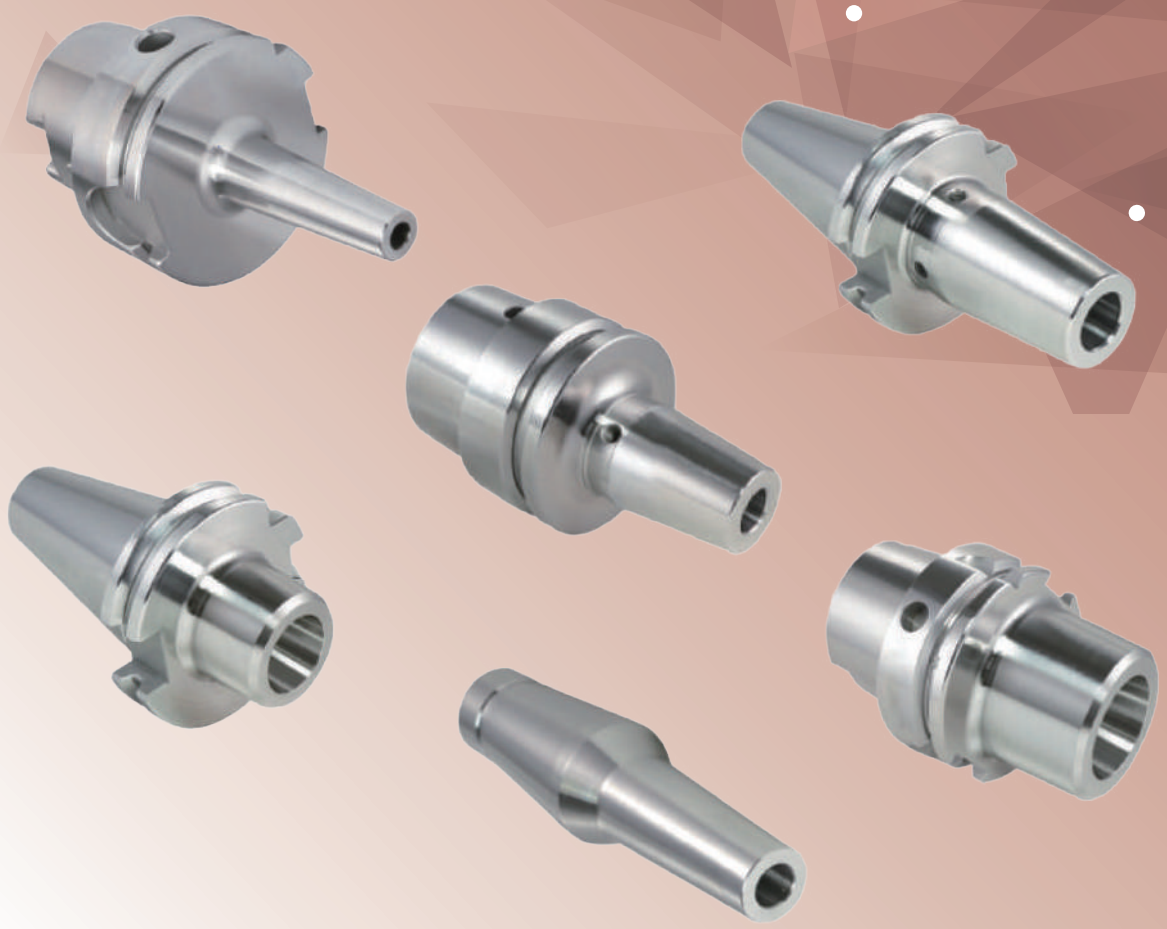

mongtec | mongtec-tools.com | ai.mongtec-tools.com | info@mongtec.com

SHRINK TOOLING SYSTEM

Shrink Fit Chuck Working Principle 3

Shrink Fit Chuck Advantages 4

BT Shrink Fit Chuck, 4.5°, Standard 5

BBT Shrink Fit Chuck, 4.5°, Standard 11

SK Shrink Fit Chuck, 4.5°, Standard 14

CAT Shrink Fit Chuck, 4.5°, Standard 18

HSK Shrink Fit Chuck, 4.5°, Standard 23

BT Shrink Fit Chuck, 4.5°, Coolant 35

BBT Shrink Fit Chuck, 4.5°, Coolant 37

SK Shrink Fit Chuck, 4.5°, Coolant 39

CAT Shrink Fit Chuck, 4.5°, Coolant 41

HSK Shrink Fit Chuck, 4.5°, Coolant 46

BT Shrink Fit Chuck, Slim, 3° 49

SK Shrink Fit Chuck, Slim, 3° 50

CAT Shrink Fit Chuck, Slim, 3° 51

HSK Shrink Fit Chuck, Slim, 3° 52

SHRINK TOOLING SYSTEM

CShrink Fit Extension, 3° 56

Module Shrink Chuck 58

Shrink Fit ER Collet 59

Shrink Fit ER Collet Extension 60

Shrink Chuck Set 61

BT Shrink Chuck Taper 62

SK Shrink Chuck Taper 63

HSK Shrink Chuck Taper 64

BT Shrink Chuck Taper, Coolant 67

SK Shrink Chuck Taper, Coolant 67

HSK Shrink Chuck Taper, Coolant 68

Shrink Chuck Extension, Standard 71

Shrink Chuck Extension, Coolant 72

Shrink Chuck Set 73

Shrink Fit Machine, Standard 74

Shrink Fit Chuck Working Principle

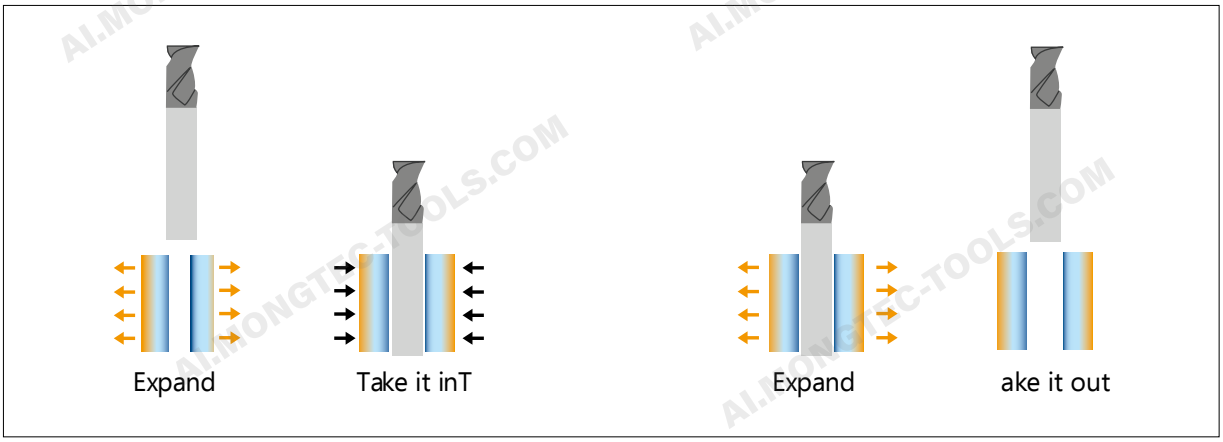

Loading

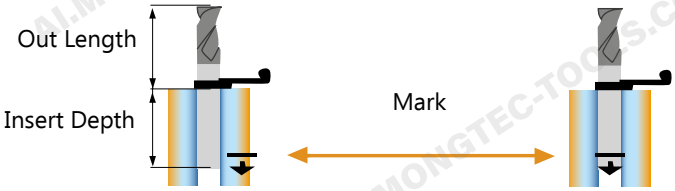

Set the Out Length or Insert depth

The mark is the minimum depth, and the depth must exceed the mark.

Unloading

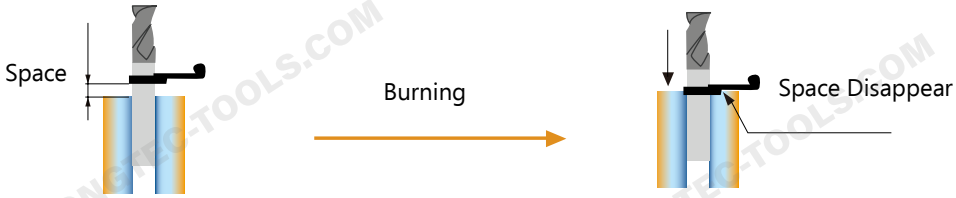

Leave a gap and install an anti-falling handle

Take it out and uninstall it.

Shrink Fit Chuck Advantages

High Precision

Collet Chuck ER Tool holders

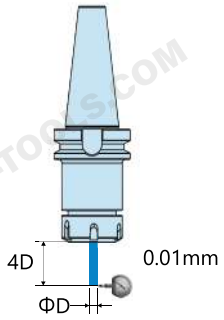

Shrink Fit Chuck Shrink Fit Chuck

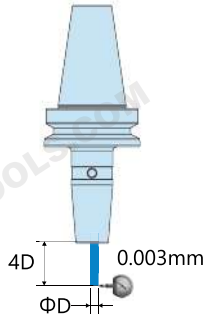

High Clamping Force

Collet Chuck ER Tool holders

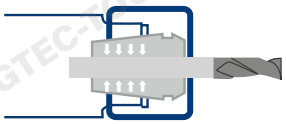

Elastic Deformation

Shrink Fit Chuck Shrink Fit Chuck

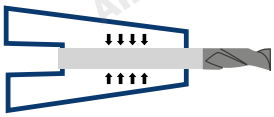

Thermal Expansion Contractility

Deep Cavity Machining

Collet Chuck ER Tool holders

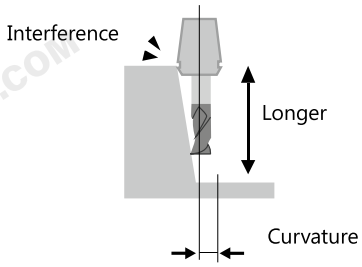

Shrink Fit Chuck Shrink Fit Chuck

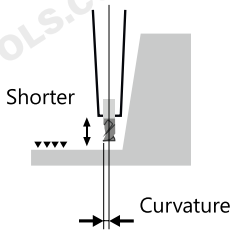

Shrink Fit Chuck Coolant Outlet Method

Through-Spindle Coolant (Form AD)

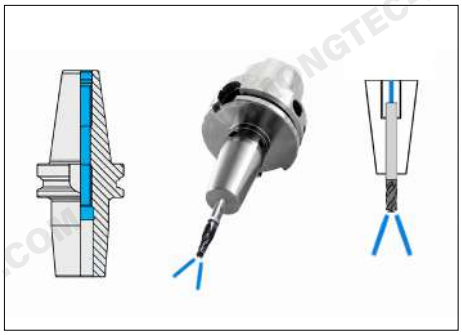

Flange Face Coolant Outlet

Center and Flange Coolant (Form AD+B)

BT Shrink Fit Chuck, 4.5°, Standard

A ↗	RPM	
≤0.003	G2.5/25000	AD

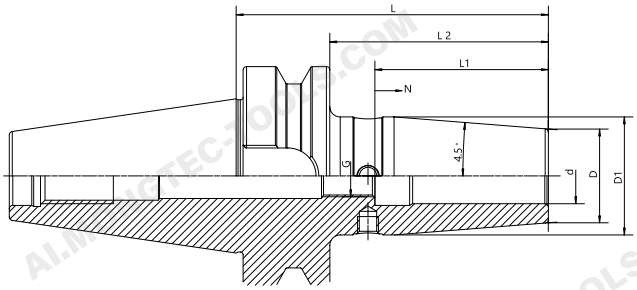

Size	d	D	D1	L	L2	L1	N	G
BT30QSF03Q80	3	15	20	80	58	-	-	-
BT30QSF04Q80	4	15	20	80	58	-	-	-
BT30QSF05Q80	5	15	20	80	58	-	-	-
BT30QSF06Q80	6	21	27	80	58	36	10	M5
BT30QSF08Q80	8	21	27	80	58	36	10	M6
BT30QSF10Q80	10	24	30.5	80	58	42	10	M8x1
BT30QSF12Q80	12	24	30.5	80	58	47	10	M10x1
BT30QSF14Q80	14	27	33.5	80	58	47	10	M10x1
BT30QSF16Q80	16	27	33.5	80	58	50	10	M12x1
BT30QSF18Q80	18	33	39.5	80	58	50	10	M12x1
BT30QSF20Q80	20	33	39.5	80	58	52	10	M16x1
BT30QSF06Q120	6	21	27	120	98	36	10	M5
BT30QSF08Q120	8	21	27	120	98	36	10	M6
BT30QSF10Q120	10	24	32	120	98	42	10	M8x1
BT30QSF12Q120	12	24	32	120	98	47	10	M10x1
BT30QSF16Q120	16	27	34	120	98	50	10	M12x1
BT30QSF20Q120	20	33	42	120	98	52	10	M16x1

BT Shrink Fit Chuck, 4.5°, Standard

A ↗	RPM	
≤0.003	G2.5/25000	AD

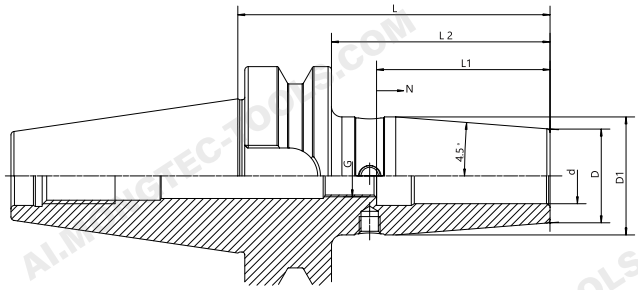

Size	d	D	D1	L	L2	L1	N	G
BT40QSF03Q80	3	15	20	80	53	-	-	-
BT40QSF04Q80	4	15	20	80	53	-	-	-
BT40QSF05Q80	5	15	20	80	53	-	-	-
BT40QSF06Q90	6	21	27	90	63	36	10	M5
BT40QSF08Q90	8	21	27	90	63	36	10	M6
BT40QSF10Q90	10	24	31	90	63	42	10	M8x1
BT40QSF12Q90	12	24	31	90	63	47	10	M10x1
BT40QSF14Q90	14	27	34	90	63	47	10	M10x1
BT40QSF16Q90	16	27	34	90	63	50	10	M12x1
BT40QSF18Q90	18	33	40	90	63	50	10	M12x1
BT40QSF20Q90	20	33	40	90	63	52	10	M16x1
BT40QSF25Q100	25	44	53	100	73	58	10	M16x1
BT40QSF32Q100	32	44	53	100	73	62	10	M16x1
BT40QSF03Q120	3	15	20	120	93	-	-	-
BT40QSF04Q120	4	15	20	120	93	-	-	-
BT40QSF05Q120	5	15	20	120	93	-	-	-
BT40QSF06Q120	6	21	27	120	93	36	10	M5
BT40QSF08Q120	8	21	27	120	93	36	10	M6
BT40QSF10Q120	10	24	32	120	93	42	10	M8x1
BT40QSF12Q120	12	24	32	120	93	47	10	M10x1
BT40QSF14Q120	14	27	34	120	93	47	10	M10x1
BT40QSF16Q120	16	27	34	120	93	50	10	M12x1
BT40QSF18Q120	18	33	42	120	93	50	10	M12x1
BT40QSF20Q120	20	33	42	120	93	52	10	M16x1
BT40QSF25Q120	25	44	53	120	93	58	10	M16x1
BT40QSF32Q120	32	44	53	120	93	62	10	M16x1

BT Shrink Fit Chuck, 4.5°, Standard

A ↗	RPM	
≤0.003	G2.5/25000	AD

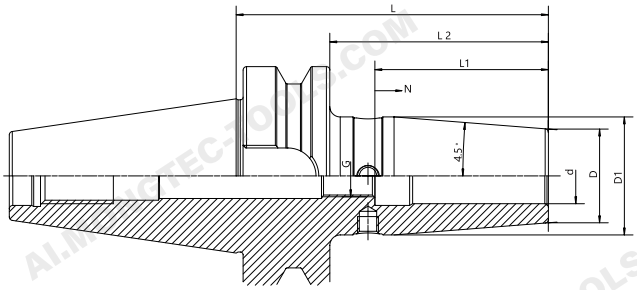

Size	d	D	D1	L	L2	L1	N	G
BT40QSF03Q160	3	15	25	160	133	-	-	-
BT40QSF04Q160	4	15	25	160	133	-	-	-
BT40QSF05Q160	5	15	25	160	133	-	-	-
BT40QSF06Q160	6	21	32	160	133	36	10	M5
BT40QSF08Q160	8	21	32	160	133	36	10	M6
BT40QSF10Q160	10	24	34	160	133	42	10	M8x1
BT40QSF12Q160	12	24	34	160	133	47	10	M10x1
BT40QSF14Q160	14	27	42	160	133	47	10	M10x1
BT40QSF16Q160	16	27	42	160	133	50	10	M12x1
BT40QSF18Q160	18	33	51	160	133	50	10	M12x1
BT40QSF20Q160	20	33	51	160	133	52	10	M16x1
BT40QSF25Q160	25	44	53	160	133	58	10	M16x1
BT40QSF32Q160	32	44	60	160	133	62	10	M16x1
BT40QSF06Q200	6	21	32	200	173	36	10	M5
BT40QSF08Q200	8	21	32	200	173	36	10	M6
BT40QSF10Q200	10	24	34	200	173	42	10	M8x1
BT40QSF12Q200	12	24	34	200	173	47	10	M10x1
BT40QSF14Q200	14	27	42	200	173	47	10	M10x1
BT40QSF16Q200	16	27	42	200	173	50	10	M12x1
BT40QSF18Q200	18	33	51	200	173	50	10	M12x1
BT40QSF20Q200	20	33	51	200	173	52	10	M16x1
BT40QSF25Q200	25	44	53	200	173	58	10	M16x1
BT40QSF32Q200	32	44	60	200	173	62	10	M16x1

BT Shrink Fit Chuck, 4.5°, Standard

A ↗	RPM	
≤0.003	G2.5/25000	AD

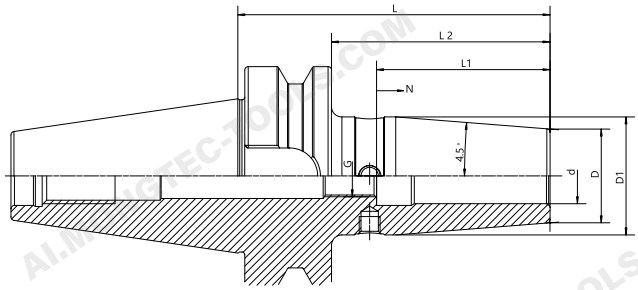

Size	d	D	D1	L	L2	L1	N	G
BT50QSF03Q100	3	15	20	100	62	-	-	-
BT50QSF04Q100	4	15	20	100	62	-	-	-
BT50QSF05Q100	5	15	20	100	62	-	-	-
BT50QSF06Q100	6	21	27	100	62	36	10	M5
BT50QSF08Q100	8	21	27	100	62	36	10	M6
BT50QSF10Q100	10	24	30.5	100	62	42	10	M8x1
BT50QSF12Q100	12	24	30.5	100	62	47	10	M10x1
BT50QSF14Q100	14	27	34	100	62	47	10	M10x1
BT50QSF16Q100	16	27	34	100	62	50	10	M12x1
BT50QSF18Q100	18	33	40	100	62	50	10	M12x1
BT50QSF20Q100	20	33	40	100	62	52	10	M16x1
BT50QSF03Q120	3	15	20	120	82	-	-	-
BT50QSF04Q120	4	15	20	120	82	-	-	-
BT50QSF05Q120	5	15	20	120	82	-	-	-
BT50QSF06Q120	6	21	27	120	82	36	10	M5
BT50QSF08Q120	8	21	27	120	82	36	10	M6
BT50QSF10Q120	10	24	32	120	82	42	10	M8x1
BT50QSF12Q120	12	24	32	120	82	47	10	M10x1
BT50QSF14Q120	14	27	34	120	82	47	10	M10x1
BT50QSF16Q120	16	27	34	120	82	50	10	M12x1
BT50QSF18Q120	18	33	42	120	82	50	10	M12x1
BT50QSF20Q120	20	33	42	120	82	52	10	M16x1
BT50QSF25Q120	25	44	53	120	82	58	10	M16x1
BT50QSF32Q120	32	44	53	120	82	62	10	M16x1

BT Shrink Fit Chuck, 4.5°, Standard

A ↗	RPM	
≤0.003	G2.5/25000	AD

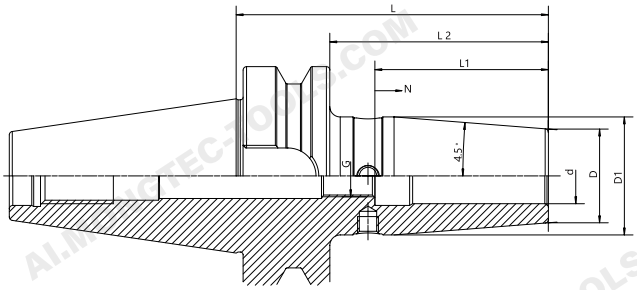

Size	d	D	D1	L	L2	L1	N	G
BT50QSF03Q160	3	15	25	160	122	-	-	-
BT50QSF04Q160	4	15	25	160	122	-	-	-
BT50QSF05Q160	5	15	25	160	122	-	-	-
BT50QSF06Q160	6	21	32	160	122	36	10	M5
BT50QSF08Q160	8	21	32	160	122	36	10	M6
BT50QSF10Q160	10	24	34	160	122	42	10	M8x1
BT50QSF12Q160	12	24	34	160	122	47	10	M10x1
BT50QSF14Q160	14	27	42	160	122	47	10	M10x1
BT50QSF16Q160	16	27	42	160	122	50	10	M12x1
BT50QSF18Q160	18	33	49	160	122	50	10	M12x1
BT50QSF20Q160	20	33	49	160	122	52	10	M16x1
BT50QSF25Q160	25	44	60	160	122	58	10	M16x1
BT50QSF32Q160	32	44	60	160	122	62	10	M16x1
BT50QSF06Q200	6	21	32	200	162	36	10	M5
BT50QSF08Q200	8	21	32	200	162	36	10	M6
BT50QSF10Q200	10	24	34	200	162	42	10	M8x1
BT50QSF12Q200	12	24	34	200	162	47	10	M10x1
BT50QSF14Q200	14	27	42	200	162	47	10	M10x1
BT50QSF16Q200	16	27	42	200	162	50	10	M12x1
BT50QSF18Q200	18	33	51	200	162	50	10	M12x1
BT50QSF20Q200	20	33	51	200	162	52	10	M16x1
BT50QSF25Q200	25	44	60	200	162	58	10	M16x1
BT50QSF32Q200	32	44	60	200	162	62	10	M16x1
BT50QSF06Q250	6	21	32	250	212	36	10	M5
BT50QSF08Q250	8	21	32	250	212	36	10	M6
BT50QSF10Q250	10	24	34	250	212	42	10	M8x1
BT50QSF12Q250	12	24	34	250	212	47	10	M10x1
BT50QSF16Q250	16	27	42	250	212	50	10	M12x1
BT50QSF18Q250	18	33	51	250	212	50	10	M12x1
BT50QSF20Q250	20	33	51	250	212	52	10	M16x1
BT50QSF25Q250	25	44	60	250	212	58	10	M16x1
BT50QSF32Q250	32	44	60	250	212	62	10	M16x1

BT Shrink Fit Chuck, 4.5°, Standard

A ↗	RPM	
≤0.003	G2.5/25000	AD

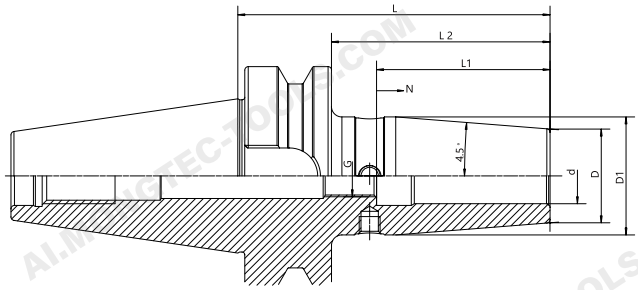

Size	d	D	D1	L	L2	L1	N	G
BT30QSF1/4"-3.15"	1/4"	0.83"	1.06"	3.15"	2.28"	1.42"	0.39"	M5
BT30QSF3/8"-3.15"	3/8"	0.95"	1.26"	3.15"	2.28"	1.65"	0.39"	M8 x 1
BT30QSF1/2"-3.15"	1/2"	0.94"	1.34"	3.15"	2.28"	1.85"	0.39"	M10 x 1
BT30QSF5/8"-3.15"	5/8"	1.06"	1.34"	3.15"	2.28"	1.97"	0.39"	M12 x 1
BT30QSF3/4"-3.15"	3/4"	1.29"	1.62"	3.15"	2.28"	2.04"	0.39"	M16 x 2.0
BT40QSF3/16"-3.54	3/16"	0.43"	0.75"	3.54"	2.67"	0.79"	-	M6 x 1.0
BT40QSF1/4"-3.54	1/4"	0.82"	1.06"	3.54"	2.67"	1.42"	0.39"	M5 x 0.8
BT40QSF3/8"-3.54	3/8"	0.94"	1.25"	3.54"	2.67"	1.65"	0.39"	-
BT40QSF1/2"-3.54	1/2"	1.10"	1.34"	3.54"	2.67"	1.85"	0.39"	M10 x 1.5
BT40QSF5/8"-3.54	5/8"	1.06"	1.34"	3.54"	2.67"	1.96"	0.39"	M12 x 1.75
BT40QSF3/4"-3.54	3/4"	1.29"	1.65"	3.54"	2.67"	2.04"	0.39"	M16 x 2.0
BT40QSF1.0"-3.54	1.0"	1.73"	2.08"	3.54"	2.67"	2.28"	0.39"	M20 x 2.0
BT40QSF1Q1/4"-4.13	1Q1/4"	1.81”	2.08"	4.13"	3.26"	2.28"	0.39"	M20 x 2.0
BT40QSF1/8"-6.3"	1/8"	0.36"	0.63"	6"	5.13"	0.70"	-	M6 x 1.0
BT40QSF3/16"-6.3"	3/16"	0.43"	0.70"	6"	5.13"	0.79"	-	M6 x 1.0
BT40QSF1/4"-6.3"	1/4"	0.49"	0.83"	6"	5.13"	1.42"	0.39"	M5 x 0.8
BT40QSF3/8"-6.3"	3/8"	0.61"	0.94"	6"	5.13"	1.65"	0.39"	M8 x 1.25
BT40QSF1/2"-6.3"	1/2"	0.74"	1.06"	6"	5.13"	1.85"	0.39"	M10 x 1.5
BT40QSF5/8"-6.3"	5/8"	1.06"	1.34"	6"	5.13"	1.96"	0.39"	M12 x 1.75
BT40QSF3/4"-6.3"	3/4"	1.29"	1.65"	6"	5.13"	1.65"	0.39"	M16 x 2.0
BT40QSF1"-6.3"	1"	1.73"	2.09"	6"	5.13"	2.28"	0.39"	M20 x 2.0

BBT Shrink Fit Chuck, 4.5°, Standard

A ↗	RPM	
≤0.003	G2.5/25000	AD

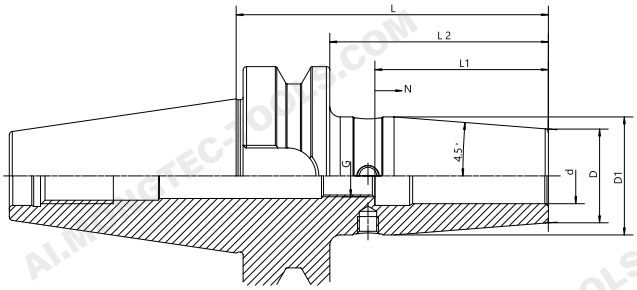

Size	d	D	D1	L	L2	L1	N	G
BBT40QSF03Q80	3	15	20	80	53	-	-	-
BBT40QSF04Q80	4	15	20	80	53	-	-	-
BBT40QSF05Q80	5	15	20	80	53	-	-	-
BBT40QSF06Q90	6	21	27	90	63	36	10	M5
BBT40QSF08Q90	8	21	27	90	63	36	10	M6
BBT40QSF10Q90	10	24	31	90	63	42	10	M8x1
BBT40QSF12Q90	12	24	31	90	63	47	10	M10x1
BBT40QSF14Q90	14	27	34	90	63	47	10	M10x1
BBT40QSF16Q90	16	27	34	90	63	50	10	M12x1
BBT40QSF18Q90	18	33	40	90	63	50	10	M12x1
BBT40QSF20Q90	20	33	40	90	63	52	10	M16x1
BBT40QSF25Q100	25	44	53	100	73	58	10	M16x1
BBT40QSF32Q100	32	44	53	100	73	62	10	M16x1
BBT40QSF03Q120	3	15	20	120	93	-	-	-
BBT40QSF04Q120	4	15	20	120	93	-	-	-
BBT40QSF05Q120	5	15	20	120	93	-	-	-
BBT40QSF06Q120	6	21	27	120	93	36	10	M5
BBT40QSF08Q120	8	21	27	120	93	36	10	M6
BBT40QSF10Q120	10	24	32	120	93	42	10	M8x1
BBT40QSF12Q120	12	24	32	120	93	47	10	M10x1
BBT40QSF14Q120	14	27	34	120	93	47	10	M10x1
BBT40QSF16Q120	16	27	34	120	93	50	10	M12x1
BBT40QSF18Q120	18	33	42	120	93	50	10	M12x1
BBT40QSF20Q120	20	33	42	120	93	52	10	M16x1
BBT40QSF25Q120	25	44	53	120	93	58	10	M16x1
BBT40QSF32Q120	32	44	53	120	93	62	10	M16x1

BBT Shrink Fit Chuck, 4.5°, Standard

A ↗	RPM	
≤0.003	G2.5/25000	AD

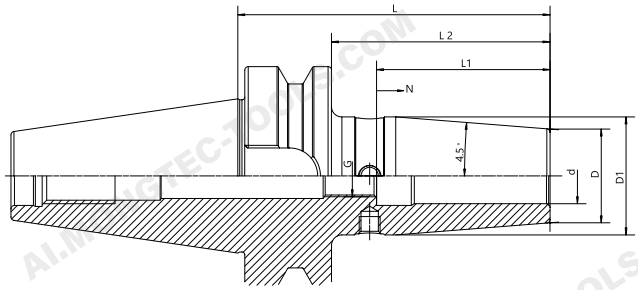

Size	d	D	D1	L	L2	L1	N	G
BBT40QSF03Q160	3	15	25	160	133	-	-	-
BBT40QSF04Q160	4	15	25	160	133	-	-	-
BBT40QSF05Q160	5	15	25	160	133	-	-	-
BBT40QSF06Q160	6	21	32	160	133	36	10	M5
BBT40QSF08Q160	8	21	32	160	133	36	10	M6
BBT40QSF10Q160	10	24	34	160	133	42	10	M8x1
BBT40QSF12Q160	12	24	34	160	133	47	10	M10x1
BBT40QSF14Q160	14	27	42	160	133	47	10	M10x1
BBT40QSF16Q160	16	27	42	160	133	50	10	M12x1
BBT40QSF18Q160	18	33	51	160	133	50	10	M12x1
BBT40QSF20Q160	20	33	51	160	133	52	10	M16x1
BBT40QSF25Q160	25	44	53	160	133	58	10	M16x1
BBT40QSF32Q160	32	44	60	160	133	62	10	M16x1
BBT50QSF03Q100	3	15	20	100	62	-	-	-
BBT50QSF04Q100	4	15	20	100	62	-	-	-
BBT50QSF05Q100	5	15	20	100	62	-	-	-
BBT50QSF06Q100	6	21	27	100	62	36	10	M5
BBT50QSF08Q100	8	21	27	100	62	36	10	M6
BBT50QSF10Q100	10	24	30.5	100	62	42	10	M8x1
BBT50QSF12Q100	12	24	30.5	100	62	47	10	M10x1
BBT50QSF14Q100	14	27	34	100	62	47	10	M10x1
BBT50QSF16Q100	16	27	34	100	62	50	10	M12x1
BBT50QSF18Q100	18	33	40	100	62	50	10	M12x1
BBT50QSF20Q100	20	33	40	100	62	52	10	M16x1
BBT50QSF25Q120	25	44	53	120	82	58	10	M16x1
BBT50QSF32Q120	32	44	53	120	82	62	10	M16x1

BBT Shrink Fit Chuck, 4.5°, Standard

A ↗	RPM	
≤0.003	G2.5/25000	AD

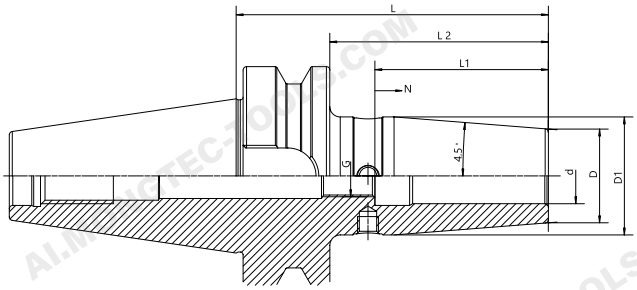

Size	d	D	D1	L	L2	L1	N	G
BBT50QSF03Q120	3	15	20	120	82	-	-	-
BBT50QSF04Q120	4	15	20	120	82	-	-	-
BBT50QSF05Q120	5	15	20	120	82	-	-	-
BBT50QSF06Q120	6	21	27	120	82	36	10	M5
BBT50QSF08Q120	8	21	27	120	82	36	10	M6
BBT50QSF10Q120	10	24	32	120	82	42	10	M8x1
BBT50QSF12Q120	12	24	32	120	82	47	10	M10x1
BBT50QSF14Q120	14	27	34	120	82	47	10	M10x1
BBT50QSF16Q120	16	27	34	120	82	50	10	M12x1
BBT50QSF18Q120	18	33	42	120	82	50	10	M12x1
BBT50QSF20Q120	20	33	42	120	82	52	10	M16x1
BBT50QSF03Q160	3	15	25	160	122	-	-	-
BBT50QSF04Q160	4	15	25	160	122	-	-	-
BBT50QSF05Q160	5	15	25	160	122	-	-	-
BBT50QSF06Q160	6	21	32	160	122	36	10	M5
BBT50QSF08Q160	8	21	32	160	122	36	10	M6
BBT50QSF10Q160	10	24	34	160	122	42	10	M8x1
BBT50QSF12Q160	12	24	34	160	122	47	10	M10x1
BBT50QSF14Q160	14	27	42	160	122	47	10	M10x1
BBT50QSF16Q160	16	27	42	160	122	50	10	M12x1
BBT50QSF18Q160	18	33	49	160	122	50	10	M12x1
BBT50QSF20Q160	20	33	49	160	122	52	10	M16x1
BBT50QSF25Q160	25	44	60	160	122	58	10	M16x1
BBT50QSF32Q160	32	44	60	160	122	62	10	M16x1

SK Shrink Fit Chuck, 4.5°, Standard

A ↗	RPM	
≤0.003	G2.5/25000	AD/B

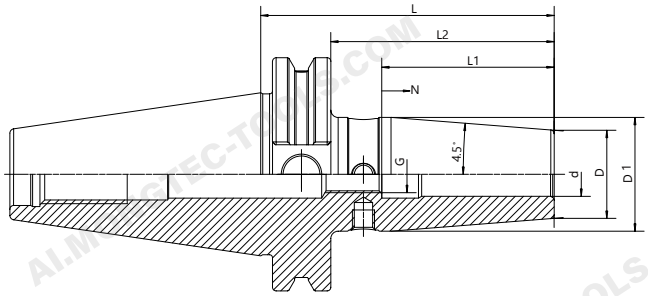

Size	d	D	D1	L	L2	L1	N	G
SK30QSF03Q80	3	15	20	80	60.9	-	-	-
SK30QSF04Q80	4	15	20	80	60.9	-	-	-
SK30QSF05Q80	5	15	20	80	60.9	-	-	-
SK30QSF06Q80	6	21	27	80	60.9	36	10	M5
SK30QSF08Q80	8	21	27	80	60.9	36	10	M6
SK30QSF10Q80	10	24	32	80	60.9	42	10	M8x1
SK30QSF12Q80	12	24	32	80	60.9	47	10	M10x1
SK30QSF14Q80	14	27	34	80	60.9	47	10	M10x1
SK30QSF16Q80	16	27	34	80	60.9	50	10	M12x1
SK30QSF18Q80	18	33	42	80	60.9	50	10	M12x1
SK30QSF20Q80	20	33	42	80	60.9	52	10	M16x1
SK30QSF03Q120	3	15	20	120	100.9	-	-	-
SK30QSF04Q120	4	15	20	120	100.9	-	-	-
SK30QSF05Q120	5	15	20	120	100.9	-	-	-
SK30QSF06Q120	6	21	27	120	100.9	36	10	M5
SK30QSF08Q120	8	21	27	120	100.9	36	10	M6
SK30QSF10Q120	10	24	32	120	100.9	42	10	M8x1
SK30QSF12Q120	12	24	32	120	100.9	47	10	M10x1
SK30QSF16Q120	16	27	34	120	100.9	50	10	M12x1
SK40QSF03Q80	3	15	20	80	60.9	-	-	-
SK40QSF04Q80	4	15	20	80	60.9	-	-	-
SK40QSF05Q80	5	15	20	80	60.9	-	-	-
SK40QSF06Q80	6	21	27	80	60.9	36	10	M5
SK40QSF08Q80	8	21	27	80	60.9	36	10	M6
SK40QSF10Q80	10	24	31	80	60.9	42	10	M8x1
SK40QSF12Q80	12	24	31	80	60.9	47	10	M10x1
SK40QSF14Q80	14	27	34	80	60.9	47	10	M10x1
SK40QSF16Q80	16	27	34	80	60.9	50	10	M12x1
SK40QSF18Q80	18	33	40	80	60.9	50	10	M12x1
SK40QSF20Q80	20	33	40	80	60.9	52	10	M16x1
SK40QSF25Q100	25	44	50	100	80.9	58	10	M16x1
SK40QSF32Q100	32	44	50	100	80.9	62	10	M16x1

SK Shrink Fit Chuck, 4.5°, Standard

A ↗	RPM	
≤0.003	G2.5/25000	AD/B

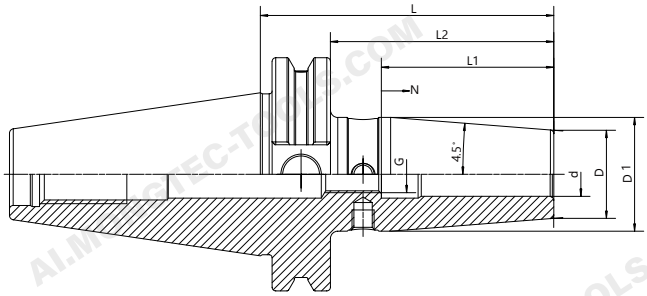

Size	d	D	D1	L	L2	L1	N	G
SK40QSF03Q120	3	15	20	120	100.9	-	-	-
SK40QSF04Q120	4	15	20	120	100.9	-	-	-
SK40QSF05Q120	5	15	20	120	100.9	-	-	-
SK40QSF06Q120	6	21	27	120	100.9	36	10	M5
SK40QSF08Q120	8	21	27	120	100.9	36	10	M6
SK40QSF10Q120	10	24	32	120	100.9	42	10	M8x1
SK40QSF12Q120	12	24	32	120	100.9	47	10	M10x1
SK40QSF14Q120	14	27	34	120	100.9	47	10	M10x1
SK40QSF16Q120	16	27	34	120	100.9	50	10	M12x1
SK40QSF18Q120	18	31	42	120	100.9	50	10	M12x1
SK40QSF20Q120	20	31	42	120	100.9	52	10	M16x1
SK40QSF25Q120	25	44	50	120	100.9	58	10	M16x1
SK40QSF03Q160	3	15	20	160	140.9	-	-	-
SK40QSF04Q160	4	15	20	160	140.9	-	-	-
SK40QSF05Q160	5	15	20	160	140.9	-	-	-
SK40QSF06Q160	6	21	32	160	140.9	36	10	M5
SK40QSF08Q160	8	21	32	160	140.9	36	10	M6
SK40QSF10Q160	10	24	34	160	140.9	42	10	M8x1
SK40QSF12Q160	12	24	34	160	140.9	47	10	M10x1
SK40QSF14Q160	14	27	42	160	140.9	47	10	M10x1
SK40QSF16Q160	16	27	42	160	140.9	50	10	M12x1
SK40QSF18Q160	18	33	50	160	140.9	50	10	M12x1
SK40QSF20Q160	20	33	50	160	140.9	52	10	M16x1
SK40QSF25Q160	25	44	50	160	140.9	58	10	M16x1
SK40QSF32Q160	32	44	50	160	140.9	62	10	M16x1

SK Shrink Fit Chuck, 4.5°, Standard

A ↗	RPM	
≤0.003	G2.5/25000	AD/B

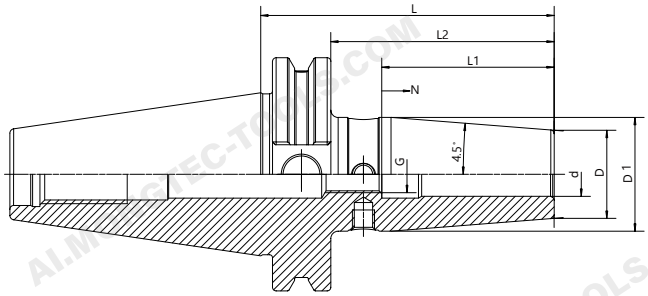

Size	d	D	D1	L	L2	L1	N	G
SK40QSF06Q200	6	21	32	200	180.9	36	10	M5
SK40QSF08Q200	8	21	32	200	180.9	36	10	M6
SK40QSF10Q200	10	24	34	200	180.9	42	10	M8x1
SK40QSF12Q200	12	24	34	200	180.9	47	10	M10x1
SK40QSF14Q200	14	27	42	200	180.9	47	10	M10x1
SK40QSF16Q200	16	27	42	200	180.9	50	10	M12x1
SK40QSF18Q200	18	33	50	200	180.9	50	10	M12x1
SK40QSF20Q200	20	33	50	200	180.9	52	10	M16x1
SK40QSF25Q200	25	44	50	200	180.9	58	10	M16x1
SK40QSF32Q200	32	44	50	200	180.9	62	10	M16x1
SK50QSF06Q80	6	21	27	80	60.9	36	10	M5
SK50QSF08Q80	8	21	27	80	60.9	36	10	M6
SK50QSF10Q80	10	24	31	80	60.9	42	10	M8x1
SK50QSF12Q80	12	24	31	80	60.9	47	10	M10x1
SK50QSF14Q80	14	27	34	80	60.9	47	10	M10x1
SK50QSF16Q80	16	27	34	80	60.9	50	10	M12x1
SK50QSF18Q80	18	33	40	80	60.9	50	10	M12x1
SK50QSF20Q80	20	33	39.5	80	60.9	52	10	M16x1
SK50QSF25-90	25	44	52.5	90	70.9	58	10	M16x1
SK50QSF32Q90	32	44	52.5	90	70.9	62	10	M16x1

SK Shrink Fit Chuck, 4.5°, Standard

A ↗	RPM	
≤0.003	G2.5/25000	AD/B

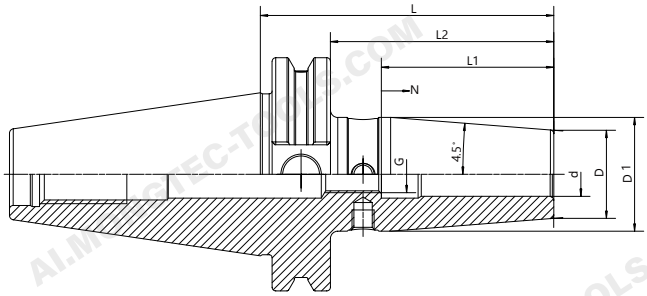

Size	d	D	D1	L	L2	L1	N	G
SK50QSF06Q120	6	21	27	120	100.9	36	10	M5
SK50QSF08Q120	8	21	27	120	100.9	36	10	M6
SK50QSF10Q120	10	24	32	120	100.9	42	10	M8x1
SK50QSF12Q120	12	24	32	120	100.9	47	10	M10x1
SK50QSF14Q120	14	27	34	120	100.9	47	10	M10x1
SK50QSF16Q120	16	27	34	120	100.9	50	10	M12x1
SK50QSF18Q120	18	33	42	120	100.9	50	10	M12x1
SK50QSF20Q120	20	33	42	120	100.9	52	10	M16x1
SK50QSF25Q120	25	44	53	120	100.9	58	10	M16x1
SK50QSF32Q120	32	44	53	120	100.9	62	10	M16x1
SK50QSF06Q160	6	21	32	160	140.9	36	10	M5
SK50QSF08Q160	8	21	32	160	140.9	36	10	M6
SK50QSF10Q160	10	24	34	160	140.9	42	10	M8x1
SK50QSF12Q160	12	24	34	160	140.9	47	10	M10x1
SK50QSF14Q160	14	27	42	160	140.9	47	10	M10x1
SK50QSF16Q160	16	27	42	160	140.9	50	10	M12x1
SK50QSF18Q160	18	33	51	160	140.9	50	10	M12x1
SK50QSF20Q160	20	33	51	160	140.9	52	10	M16x1
SK50QSF25Q160	25	44	60	160	140.9	58	10	M16x1
SK50QSF32Q160	32	44	60	160	140.9	62	10	M16x1
SK50QSF06Q200	6	21	32	200	180.9	36	10	M5
SK50QSF08Q200	8	21	32	200	180.9	36	10	M6
SK50QSF10Q200	10	24	34	200	180.9	42	10	M8x1
SK50QSF12Q200	12	24	34	200	180.9	47	10	M10x1
SK50QSF14Q200	14	27	42	200	180.9	47	10	M10x1
SK50QSF16Q200	16	27	42	200	180.9	50	10	M12x1
SK50QSF18Q200	18	33	51	200	180.9	50	10	M12x1
SK50QSF20Q200	20	33	51	200	180.9	52	10	M16x1
SK50QSF25Q200	25	44	60	200	180.9	58	10	M16x1
SK50QSF32Q200	32	44	60	200	180.9	62	10	M16x1

CAT Shrink Fit Chuck, 4.5°, Standard

A ↗	RPM	
≤0.003	G2.5/25000	AD/B

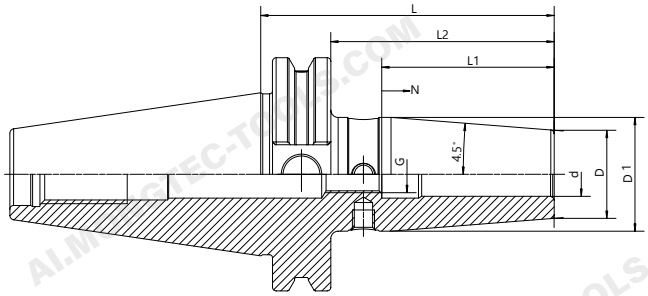

Size	d	D	D1	L	L2	L1	N	G
CAT40QSF03Q80	3	15	20	80	60.9	-	-	-
CAT40QSF04Q80	4	15	20	80	60.9	-	-	-
CAT40QSF05Q80	5	15	20	80	60.9	-	-	-
CAT40QSF06Q80	6	21	27	80	60.9	36	10	M5
CAT40QSF08Q80	8	21	27	80	60.9	36	10	M6
CAT40QSF10Q80	10	24	31	80	60.9	42	10	M8x1
CAT40QSF12Q80	12	24	31	80	60.9	47	10	M10x1
CAT40QSF14Q80	14	27	34	80	60.9	47	10	M10x1
CAT40QSF16Q80	16	27	34	80	60.9	50	10	M12x1
CAT40QSF18Q80	18	33	40	80	60.9	50	10	M12x1
CAT40QSF20Q80	20	33	40	80	60.9	52	10	M16x1
CAT40QSF25Q100	25	44	50	100	80.9	58	10	M16x1
CAT40QSF32Q100	32	44	50	100	80.9	62	10	M16x1
CAT40QSF06Q120	6	21	27	120	100.9	36	10	M5
CAT40QSF08Q120	8	21	27	120	100.9	36	10	M6
CAT40QSF10Q120	10	24	32	120	100.9	42	10	M8x1
CAT40QSF12Q120	12	24	32	120	100.9	47	10	M10x1
CAT40QSF14Q120	14	27	34	120	100.9	47	10	M10x1
CAT40QSF16Q120	16	27	34	120	100.9	50	10	M12x1
CAT40QSF18Q120	18	33	42	120	100.9	50	10	M12x1
CAT40QSF20Q120	20	33	42	120	100.9	52	10	M16x1
CAT40QSF25Q120	25	44	50	120	100.9	58	10	M16x1
CAT40QSF06Q160	6	21	32	160	140.9	36	10	M5
CAT40QSF08Q160	8	21	32	160	140.9	36	10	M6
CAT40QSF10Q160	10	24	34	160	140.9	42	10	M8x1
CAT40QSF12Q160	12	24	34	160	140.9	47	10	M10x1
CAT40QSF14Q160	14	27	42	160	140.9	47	10	M10x1
CAT40QSF16Q160	16	27	42	160	140.9	50	10	M12x1
CAT40QSF18Q160	18	33	50	160	140.9	50	10	M12x1
CAT40QSF20Q160	20	33	50	160	140.9	52	10	M16x1
CAT40QSF25Q160	25	44	50	160	140.9	58	10	M16x1
CAT40QSF32Q160	32	44	50	160	140.9	62	10	M16x1

CAT Shrink Fit Chuck, 4.5°, Standard

A ↗	RPM	
≤0.003	G2.5/25000	AD/B

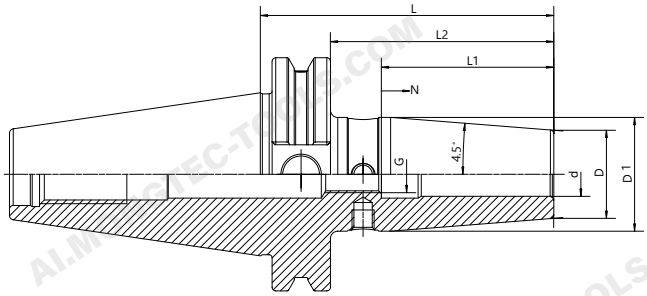

Size	d	D	D1	L	L2	L1	N	G
CAT40QSF06Q200	6	21	32	200	180.9	36	10	M5
CAT40QSF08Q200	8	21	32	200	180.9	36	10	M6
CAT40QSF10Q200	10	24	34	200	180.9	42	10	M8x1
CAT40QSF12Q200	12	24	34	200	180.9	47	10	M10x1
CAT40QSF14Q200	14	27	42	200	180.9	47	10	M10x1
CAT40QSF16Q200	16	27	42	200	180.9	50	10	M12x1
CAT40QSF18Q200	18	33	50	200	180.9	50	10	M12x1
CAT40QSF20Q200	20	33	50	200	180.9	52	10	M16x1
CAT40QSF25Q200	25	44	50	200	180.9	58	10	M16x1
CAT40QSF32Q200	32	44	50	200	180.9	62	10	M16x1
CAT50QSF06Q80	6	21	27	80	60.9	36	10	M5
CAT50QSF08Q80	8	21	27	80	60.9	36	10	M6
CAT50QSF10Q80	10	24	31	80	60.9	42	10	M8x1
CAT50QSF12Q80	12	24	31	80	60.9	47	10	M10x1
CAT50QSF14Q80	14	27	34	80	60.9	47	10	M10x1
CAT50QSF16Q80	16	27	34	80	60.9	50	10	M12x1
CAT50QSF18Q80	18	33	40	80	60.9	50	10	M12x1
CAT50QSF20Q80	20	33	39.5	80	60.9	52	10	M16x1
CAT50QSF25Q100	25	44	52.5	100	80.9	58	10	M16x1
CAT50QSF32Q100	32	44	52.5	100	80.9	62	10	M16x1
CAT50QSF06Q120	6	21	27	120	100.9	36	10	M5
CAT50QSF08Q120	8	21	27	120	100.9	36	10	M6
CAT50QSF10Q120	10	24	32	120	100.9	42	10	M8x1
CAT50QSF12Q120	12	24	32	120	100.9	47	10	M10x1
CAT50QSF14Q120	14	27	34	120	100.9	47	10	M10x1
CAT50QSF16Q120	16	27	34	120	100.9	50	10	M12x1
CAT50QSF18Q120	18	33	42	120	100.9	50	10	M12x1
CAT50QSF20Q120	20	33	42	120	100.9	52	10	M16x1
CAT50QSF25Q120	25	44	53	120	100.9	58	10	M16x1
CAT50QSF32Q120	32	44	53	120	100.9	62	10	M16x1

CAT Shrink Fit Chuck, 4.5°, Standard

A ↗	RPM	
≤0.003	G2.5/25000	AD/B

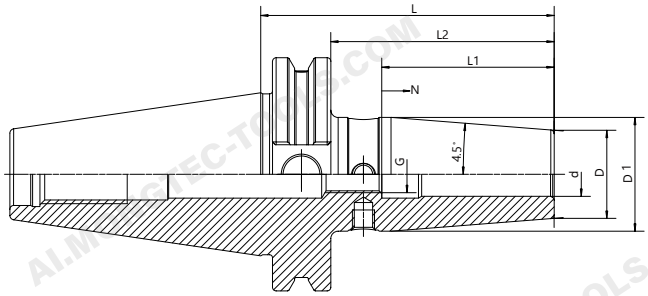

Size	d	D	D1	L	L2	L1	N	G
CAT50QSF06Q160	6	21	32	160	140.9	36	10	M5
CAT50QSF08Q160	8	21	32	160	140.9	36	10	M6
CAT50QSF10Q160	10	24	34	160	140.9	42	10	M8x1
CAT50QSF12Q160	12	24	34	160	140.9	47	10	M10x1
CAT50QSF14Q160	14	27	42	160	140.9	47	10	M10x1
CAT50QSF16Q160	16	27	42	160	140.9	50	10	M12x1
CAT50QSF18Q160	18	33	51	160	140.9	50	10	M12x1
CAT50QSF20Q160	20	33	51	160	140.9	52	10	M16x1
CAT50QSF25Q160	25	44	60	160	140.9	58	10	M16x1
CAT50QSF32Q160	32	44	60	160	140.9	62	10	M16x1
CAT50QSF06Q200	6	21	32	200	180.9	36	10	M5
CAT50QSF08Q200	8	21	32	200	180.9	36	10	M6
CAT50QSF10Q200	10	24	34	200	180.9	42	10	M8x1
CAT50QSF12Q200	12	24	34	200	180.9	47	10	M10x1
CAT50QSF14Q200	14	27	42	200	180.9	47	10	M10x1
CAT50QSF16Q200	16	27	42	200	180.9	50	10	M12x1
CAT50QSF18Q200	18	33	51	200	180.9	50	10	M12x1
CAT50QSF20Q200	20	33	51	200	180.9	52	10	M16x1
CAT50QSF25Q200	25	44	60	200	180.9	58	10	M16x1
CAT50QSF32Q200	32	44	60	200	180.9	62	10	M16x1

CAT Shrink Fit Chuck, 4.5°, Standard

A ↗	RPM	
≤0.003	G2.5/25000	AD/B

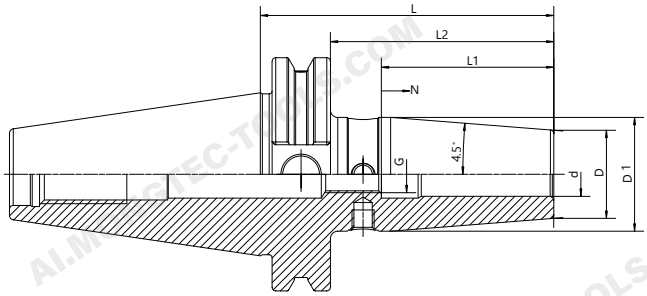

Size	d	D	D1	L	L2	L1	N	G
CAT40QSF1/8Q3.15"	0.125"	0.59"	0.79"	3.15"	2.40"	-	-	-
CAT40QSF3/16Q3.15"	0.187"	0.59"	0.79"	3.15"	2.40"	-	-	-
CAT40QSF1/4Q3.15"	0.250"	0.83"	1.06"	3.15"	2.40"	1.42"	0.39"	M5
CAT40QSF5/16Q3.15"	0.312"	0.83"	1.06"	3.15"	2.40"	1.42"	0.39"	M6
CAT40QSF3/8Q3.15"	0.375"	0.94"	1.26"	3.15"	2.40"	1.65"	0.39"	M8x1
CAT40QSF1/2Q3.15"	0.500"	1.06"	1.34"	3.15"	2.40"	1.85"	0.39"	M10x1
CAT40QSF5/8Q3.15"	0.625"	1.06"	1.34"	3.15"	2.40"	1.97"	0.39"	M12x1
CAT40QSF3/4Q3.15"	0.750"	1.30"	1.65"	3.15"	2.40"	2.05"	0.39"	M16x1
CAT40QSF1Q3.94"	1.000"	1.73"	2.09"	3.94"	2.56"	2.44"	0.39"	M16x1
CAT40QSF1Q1/4Q3.94"	1.250"	1.73"	2.09"	3.94"	2.56"	2.44"	0.39"	M16x1
CAT40QSF1/8Q4.72"	0.125"	0.59"	0.79"	4.72"	3.34"	-	-	-
CAT40QSF3/16Q4.72"	0.187"	0.59"	0.79"	4.72"	3.34"	-	-	-
CAT40QSF1/4Q4.72"	0.250"	0.83"	1.06"	4.72"	3.34"	1.42"	0.39"	M5
CAT40QSF5/16Q4.72"	0.312"	0.83"	1.06"	4.72"	3.34"	1.42"	0.39"	M6
CAT40QSF3/8Q4.72"	0.375"	0.94"	1.26"	4.72"	3.34"	1.65"	0.39"	M8x1
CAT40QSF1/2Q4.72"	0.500"	1.06"	1.34"	4.72"	3.34"	1.85"	0.39"	M10x1
CAT40QSF5/8Q4.72"	0.625"	1.06"	1.34"	4.72"	3.34"	1.97"	0.39"	M12x1
CAT40QSF3/4Q4.72"	0.750"	1.30"	1.65"	4.72"	3.34"	2.05"	0.39"	M16x1
CAT40QSF1Q4.72"	1.000"	1.73"	2.09"	4.72"	3.34"	2.44"	0.39"	M16x1
CAT40QSF1Q1/4Q4.72"	1.250"	1.73"	2.09"	4.72"	3.34"	2.44"	0.39"	M16x1
CAT40QSF1/8Q6.30"	0.125"	0.59"	0.79"	6.30"	4.92"	-	-	-
CAT40QSF3/16Q6.30"	0.187"	0.59"	0.79"	6.30"	4.92"	-	-	-
CAT40QSF1/4Q6.30"	0.250"	0.83"	1.26"	6.30"	4.92"	1.42"	0.39"	M5
CAT40QSF5/16Q6.30"	0.312"	0.83"	1.26"	6.30"	4.92"	1.42"	0.39"	M6
CAT40QSF3/8Q6.30"	0.375"	0.94"	1.34"	6.30"	4.92"	1.65"	0.39"	M8x1
CAT40QSF1/2Q6.30"	0.500"	1.06"	1.65"	6.30"	4.92"	1.85"	0.39"	M10x1
CAT40QSF5/8Q6.30"	0.625"	1.06"	1.65"	6.30"	4.92"	1.97"	0.39"	M12x1
CAT40QSF3/4Q6.30"	0.750"	1.30"	1.75"	6.30"	4.92"	2.05"	0.39"	M16x1
CAT40QSF1Q6.30"	1.000"	1.73"	2.09"	6.30"	4.92"	2.44"	0.39"	M16x1
CAT40QSF1Q1/4Q6.30"	1.250"	1.73"	2.09"	6.30"	4.92"	2.44"	0.39"	M16x1

CAT Shrink Fit Chuck, 4.5°, Standard

A ↗	RPM	
≤0.003	G2.5/25000	AD/B

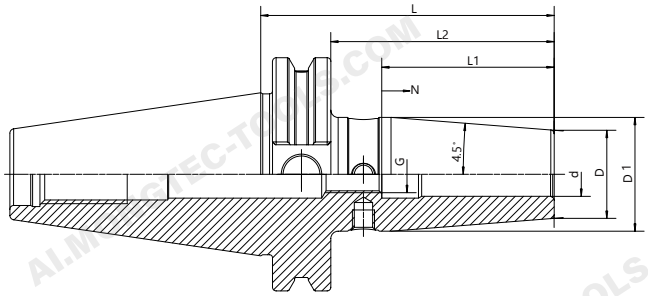

Size	d	D	D1	L	L2	L1	N	G
CAT50QSF1/4Q3.15"	0.250"	0.83"	1.06"	3.15"	2.36"	1.42"	0.39"	M5
CAT50QSF3/8Q3.15"	0.375"	0.94"	1.26"	3.15"	2.36"	1.65"	0.39"	M8x1
CAT50QSF1/2Q3.15"	0.500"	1.06"	1.34"	3.15"	2.36"	1.85"	0.39"	M10x1
CAT50QSF5/8Q3.15"	0.625"	1.06"	1.34"	3.15"	2.36"	1.97"	0.39"	M12x1
CAT50QSF3/4Q3.15"	0.750"	1.30"	1.65"	3.15"	2.36"	2.05"	0.39"	M16x1
CAT50QSF1Q3.94"	1.000"	1.73"	2.09"	3.94"	2.75"	2.44"	0.39"	M16x1
CAT50QSF1Q1/4Q3.94"	1.250"	1.73"	2.09"	3.94"	2.75"	2.44"	0.39"	M16x1
CAT50QSF1/4Q4.72"	0.250"	0.83"	1.06"	4.72"	3.35"	1.42"	0.39"	M5
CAT50QSF3/8Q4.72"	0.375"	0.94"	1.26"	4.72"	3.35"	1.65"	0.39"	M8x1
CAT50QSF1/2Q4.72"	0.500"	1.06"	1.34"	4.72"	3.35"	1.85"	0.39"	M10x1
CAT50QSF5/8Q4.72"	0.625"	1.06"	1.34"	4.72"	3.35"	1.97"	0.39"	M12x1
CAT50QSF3/4Q4.72"	0.750"	1.30"	1.65"	4.72"	3.35"	2.05"	0.39"	M16x1
CAT50QSF1Q4.72"	1.000"	1.73"	2.09"	4.72"	3.35"	2.44"	0.39"	M16x1
CAT50QSF1Q1/4Q4.72"	1.250"	1.73"	2.09"	4.72"	3.35"	2.44"	0.39"	M16x1
CAT50QSF1/4Q6.30"	0.250"	0.83"	1.26"	6.30"	4.92"	1.42"	0.39"	M5
CAT50QSF3/8Q6.30"	0.375"	0.94"	1.34"	6.30"	4.92"	1.65"	0.39"	M8x1
CAT50QSF1/2Q6.30"	0.500"	1.06"	1.65"	6.30"	4.92"	1.85"	0.39"	M10x1
CAT50QSF5/8Q6.30"	0.625"	1.06"	1.65"	6.30"	4.92"	1.97"	0.39"	M12x1
CAT50QSF3/4Q6.30"	0.750"	1.30"	2.01"	6.30"	4.92"	2.05"	0.39"	M16x1
CAT50QSF1Q6.30"	1.000"	1.73"	2.36"	6.30"	4.92"	2.44"	0.39"	M16x1
CAT50QSF1Q1/4Q6.30"	1.250"	1.73"	2.36"	6.30"	4.92"	2.44"	0.39"	M16x1

HSK Shrink Fit Chuck, 4.5°, Standard

A ↗	RPM	AD
≤0.003	G2.5/25000	

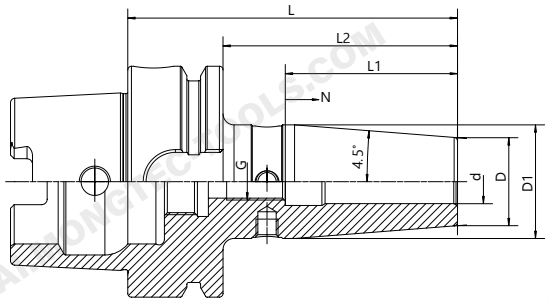

Size	d	D	D1	L	L2	L1	N	G
HSK32AQSF03Q65	3	15	20	65	45	-	-	-
HSK32AQSF04Q65	4	15	20	65	45	-	-	-
HSK32AQSF05Q65	5	15	20	65	45	-	-	-
HSK32AQSF06Q75	6	21	26	75	55	36	10	M5
HSK32AQSF08Q75	8	21	26	75	55	36	10	M6
HSK32AQSF10Q75	10	24	29	75	55	42	10	M8x1
HSK32AQSF12Q80	12	24	29	80	60	47	5	M10x1
HSK40AQSF03Q60	3	15	20	60	40	-	-	-
HSK40AQSF04Q60	4	15	20	60	40	-	-	-
HSK40AQSF05Q60	5	15	20	60	40	-	-	-
HSK40AQSF06Q80	6	21	27	80	60	36	10	M5
HSK40AQSF08Q80	8	21	27	80	60	36	10	M6
HSK40AQSF10Q80	10	24	32	80	60	42	10	M8x1
HSK40AQSF12Q90	12	24	32	90	70	47	10	M10x1
HSK40AQSF14Q90	14	27	34	90	70	47	10	M10x1
HSK40AQSF16Q90	16	27	34	90	70	50	10	M12x1
HSK50AQSF03Q80	3	15	20	80	54	-	-	-
HSK50AQSF04Q80	4	15	20	80	54	-	-	-
HSK50AQSF05Q80	5	15	20	80	54	-	-	-
HSK50AQSF06Q80	6	21	27	80	54	36	10	M5
HSK50AQSF08Q80	8	21	27	80	54	36	10	M6
HSK50AQSF10Q85	10	24	32	85	59	42	10	M8x1
HSK50AQSF12Q90	12	24	32	90	64	47	10	M10x1
HSK50AQSF14Q90	14	27	34	90	64	47	10	M10x1
HSK50AQSF16Q95	16	27	34	95	69	50	10	M12x1
HSK50AQSF18Q95	18	33	42	95	69	50	10	M12x1
HSK50AQSF20Q100	20	33	42	100	74	52	10	M16x1

HSK Shrink Fit Chuck, 4.5°, Standard

A ↗	RPM	AD
≤0.003	G2.5/25000	

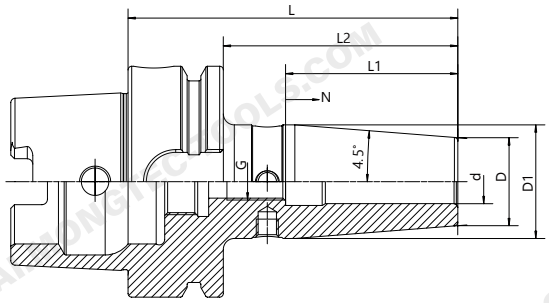

Size	d	D	D1	L	L2	L1	N	G
HSK63AQSF03Q80	3	15	20	80	54	-	-	-
HSK63AQSF04Q80	4	15	20	80	54	-	-	-
HSK63AQSF05Q80	5	15	20	80	54	-	-	-
HSK63AQSF06Q80	6	21	26.5	80	54	36	10	M5
HSK63AQSF08Q80	8	21	26.5	80	54	36	10	M6
HSK63AQSF10Q85	10	24	30.5	85	59	42	10	M8x1
HSK63AQSF12Q90	12	24	31	90	64	47	10	M10x1
HSK63AQSF14Q90	14	27	34	90	64	47	10	M10x1
HSK63AQSF16Q95	16	27	34	95	69	50	10	M12x1
HSK63AQSF18Q95	18	33	41	95	69	50	10	M12x1
HSK63AQSF20Q100	20	33	42	100	74	52	10	M16x1
HSK63AQSF25Q115	25	44	52.5	115	89	58	10	M16x1
HSK63AQSF32Q120	32	44	52.5	120	94	62	10	M16x1
HSK63AQSF03Q120	3	15	20	120	94	-	-	-
HSK63AQSF04Q120	4	15	20	120	94	-	-	-
HSK63AQSF05Q120	5	15	20	120	94	-	-	-
HSK63AQSF06Q120	6	21	27	120	94	36	10	M5
HSK63AQSF08Q120	8	21	27	120	94	36	10	M6
HSK63AQSF10Q120	10	24	32	120	94	42	10	M8x1
HSK63AQSF12Q120	12	24	32	120	94	47	10	M10x1
HSK63AQSF14Q120	14	27	34	120	94	47	10	M10x1
HSK63AQSF16Q120	16	27	34	120	94	50	10	M12x1
HSK63AQSF18Q120	18	33	42	120	94	50	10	M12x1
HSK63AQSF20Q120	20	33	42	120	94	52	10	M16x1
HSK63AQSF25Q120	25	44	52.5	120	94	58	10	M16x1

HSK Shrink Fit Chuck, 4.5°, Standard

A ↗	RPM	
≤0.003	G2.5/25000	AD

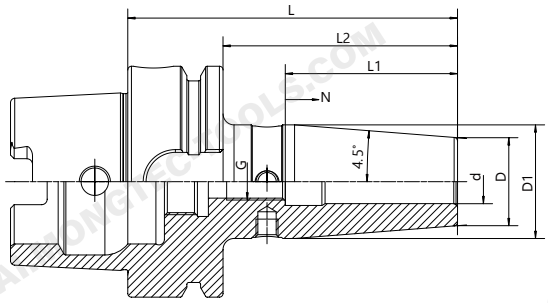

Size	d	D	D1	L	L2	L1	N	G
HSK63AQSF03Q160	3	15	25	160	134	-	-	-
HSK63AQSF04Q160	4	15	25	160	134	-	-	-
HSK63AQSF05Q160	5	15	25	160	134	-	-	-
HSK63AQSF06Q160	6	21	32	160	134	36	10	M5
HSK63AQSF08Q160	8	21	32	160	134	36	10	M6
HSK63AQSF10Q160	10	24	34	160	134	42	10	M8x1
HSK63AQSF12Q160	12	24	34	160	134	47	10	M10x1
HSK63AQSF14Q160	14	27	42	160	134	47	10	M10x1
HSK63AQSF16Q160	16	27	42	160	134	50	10	M12x1
HSK63AQSF18Q160	18	33	51	160	134	50	10	M12x1
HSK63AQSF20Q160	20	33	51	160	134	52	10	M16x1
HSK63AQSF25Q160	25	44	52.5	160	134	58	10	M16x1
HSK63AQSF32Q160	32	44	52.5	160	134	62	10	M16x1
HSK63AQSF06Q200	6	21	32	200	174	36	10	M5
HSK63AQSF08Q200	8	21	32	200	174	36	10	M6
HSK63AQSF10Q200	10	24	34	200	174	42	10	M8x1
HSK63AQSF12Q200	12	24	34	200	174	47	10	M10x1
HSK63AQSF14Q200	14	27	42	200	174	47	10	M10x1
HSK63AQSF16Q200	16	27	42	200	174	50	10	M12x1
HSK63AQSF18Q200	18	33	51	200	174	50	10	M12x1
HSK63AQSF20Q200	20	33	51	200	174	52	10	M16x1
HSK63AQSF25Q200	25	44	52.5	200	174	58	10	M16x1
HSK63AQSF32Q200	32	44	52.5	200	174	62	10	M16x1

HSK Shrink Fit Chuck, 4.5°, Standard

A ↗	RPM	
≤0.003	G2.5/25000	AD

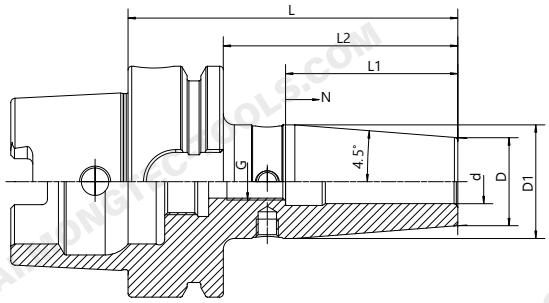

Size	d	D	D1	L	L2	L1	N	G
HSK63AQSF06Q250	6	21	32	250	224	36	10	M5
HSK63AQSF08Q250	8	21	32	250	224	36	10	M6
HSK63AQSF10Q250	10	24	34	250	224	42	10	M8x1
HSK63AQSF12Q250	12	24	34	250	224	47	10	M10x1
HSK63AQSF14Q250	14	27	42	250	224	47	10	M10x1
HSK63AQSF16Q250	16	27	42	250	224	50	10	M12x1
HSK63AQSF18Q250	18	33	51	250	224	50	10	M12x1
HSK63AQSF20Q250	20	33	51	250	224	52	10	M16x1
HSK63AQSF25Q250	25	44	52.5	250	224	58	10	M16x1
HSK63AQSF32Q250	32	44	52.5	250	224	62	10	M16x1
HSK63AQSF06Q300	6	21	32	300	274	36	10	M5
HSK63AQSF08Q300	8	21	32	300	274	36	10	M6
HSK63AQSF10Q300	10	24	34	300	274	42	10	M8x1
HSK63AQSF12Q300	12	24	34	300	274	47	10	M10x1
HSK63AQSF14Q300	14	27	42	300	274	47	10	M10x1
HSK63AQSF16Q300	16	27	42	300	274	50	10	M12x1
HSK63AQSF18Q300	18	33	51	300	274	50	10	M12x1
HSK63AQSF20Q300	20	33	51	300	274	52	10	M16x1
HSK63AQSF25Q300	25	44	52.5	300	274	58	10	M16x1
HSK63AQSF32Q300	32	44	52.5	300	274	62	10	M16x1

HSK Shrink Fit Chuck, 4.5°, Standard

A ↗	RPM	
≤0.003	G2.5/25000	AD

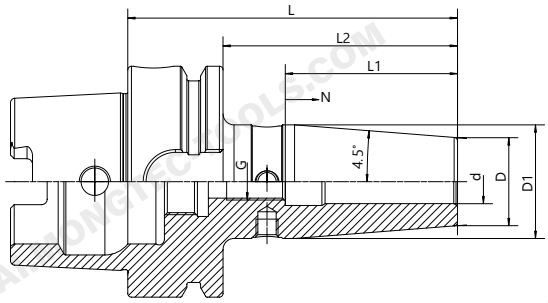

Size	d	D	D1	L	L2	L1	N	G
HSK80AQSF06Q85	6	21	27	85	59	36	10	M5
HSK80AQSF08Q85	8	21	27	85	59	36	10	M6
HSK80AQSF10Q90	10	24	32	90	64	42	10	M8x1
HSK80AQSF12Q95	12	24	32	95	69	47	10	M10x1
HSK80AQSF14Q95	14	27	34	95	69	47	10	M10x1
HSK80AQSF16Q100	16	27	34	100	74	50	10	M12x1
HSK80AQSF18Q100	18	33	42	100	74	50	10	M12x1
HSK80AQSF20Q105	20	33	42	105	79	52	10	M16x1
HSK80AQSF25Q115	25	44	53	115	89	58	10	M16x1
HSK80AQSF32Q120	32	44	53	120	94	62	10	M16x1
HSK100AQSF03Q85	3	15	20	85	56	-	-	-
HSK100AQSF04Q85	4	15	20	85	56	-	-	-
HSK100AQSF05Q85	5	15	20	85	56	-	-	-
HSK100AQSF06Q85	6	21	26.5	85	56	36	10	M5
HSK100AQSF08Q85	8	21	26.5	85	56	36	10	M6
HSK100AQSF10Q90	10	24	30.5	90	61	42	10	M8x1
HSK100AQSF12Q95	12	24	31	95	66	47	10	M10x1
HSK100AQSF14Q95	14	27	34	95	66	47	10	M10x1
HSK100AQSF16Q100	16	27	34	100	71	50	10	M12x1
HSK100AQSF18Q100	18	33	41	100	71	50	10	M12x1
HSK100AQSF20Q105	20	33	42	105	76	52	10	M16x1
HSK100AQSF25Q115	25	44	53	115	86	58	10	M16x1
HSK100AQSF32Q120	32	44	53	120	91	62	10	M16x1

HSK Shrink Fit Chuck, 4.5°, Standard

A ↗	RPM	
≤0.003	G2.5/25000	AD

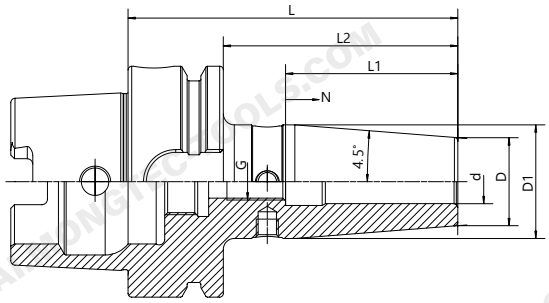

Size	d	D	D1	L	L2	L1	N	G
HSK100AQSF06Q120	6	21	27	120	91	36	10	M5
HSK100AQSF08Q120	8	21	27	120	91	36	10	M6
HSK100AQSF10Q120	10	24	32	120	91	42	10	M8x1
HSK100AQSF12Q120	12	24	32	120	91	47	10	M10x1
HSK100AQSF14Q120	14	27	34	120	91	47	10	M10x1
HSK100AQSF16Q120	16	27	34	120	91	50	10	M12x1
HSK100AQSF18Q120	18	33	42	120	91	50	10	M12x1
HSK100AQSF20Q120	20	33	42	120	91	52	10	M16x1
HSK100AQSF25Q120	25	44	53	120	91	58	10	M16x1
HSK100AQSF06Q160	6	21	32	160	131	36	10	M5
HSK100AQSF08Q160	8	21	32	160	131	36	10	M6
HSK100AQSF10Q160	10	24	34	160	131	42	10	M8x1
HSK100AQSF12Q160	12	24	34	160	131	47	10	M10x1
HSK100AQSF14Q160	14	27	42	160	131	47	10	M10x1
HSK100AQSF16Q160	16	27	42	160	131	50	10	M12x1
HSK100AQSF18Q160	18	33	50.5	160	131	50	10	M12x1
HSK100AQSF20Q160	20	33	50.5	160	131	52	10	M16x1
HSK100AQSF25Q160	25	44	60	160	131	58	10	M16x1
HSK100AQSF32Q160	32	44	60	160	131	62	10	M16x1
HSK100AQSF06Q200	6	21	32	200	171	36	10	M5
HSK100AQSF08Q200	8	21	32	200	171	36	10	M6
HSK100AQSF10Q200	10	24	34	200	171	42	10	M8x1
HSK100AQSF12Q200	12	24	34	200	171	47	10	M10x1
HSK100AQSF14Q200	14	27	42	200	171	47	10	M10x1
HSK100AQSF16Q200	16	27	42	200	171	50	10	M12x1
HSK100AQSF18Q200	18	33	51	200	171	50	10	M12x1
HSK100AQSF20Q200	20	33	51	200	171	52	10	M16x1
HSK100AQSF25Q200	25	44	60	200	171	58	10	M16x1
HSK100AQSF32Q200	32	44	6	200	171	62	10	M16x1

HSK Shrink Fit Chuck, 4.5°, Standard

A ↗	RPM	
≤0.003	G2.5/25000	AD

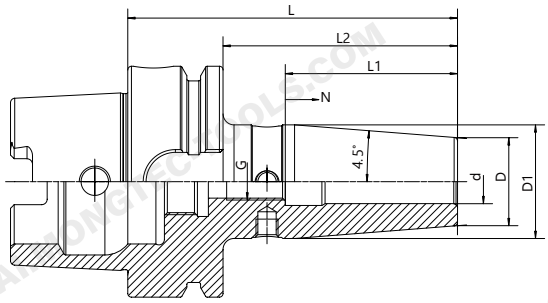

Size	d	D	D1	L	L2	L1	N	G
HSK63AQSF1/8Q3.15"	0.125"	0.59"	0.79"	3.15"	2.13"	-	-	-
HSK63AQSF3/16Q3.15"	0.187"	0.59"	0.79"	3.15"	2.13"	-	-	-
HSK63AQSF1/4Q3.15"	0.250"	0.83"	1.06"	3.15"	2.13"	1.42"	0.39"	M5
HSK63AQSF5/16Q3.15"	0.312"	0.83"	1.06"	3.15"	2.13"	1.42"	0.39"	M6
HSK63AQSF3/8Q3.35"	0.375"	0.94"	1.26"	3.35"	2.32"	1.65"	0.39"	M8x1
HSK63AQSF1/2Q3.54"	0.500"	1.06"	1.34"	3.54"	2.52"	1.85"	0.39"	M10x1
HSK63AQSF5/8Q3.74"	0.625"	1.06"	1.34"	3.74"	2.72"	1.97"	0.39"	M12x1
HSK63AQSF3/4Q3.94"	0.750"	1.30"	1.65"	3.94"	2.91"	2.05"	0.39"	M16x1
HSK63AQSF1Q4.53"	1.000"	1.73"	2.07"	4.53"	3.50"	2.44"	0.39"	M16x1
HSK63AQSF1/8Q4.72"	0.125"	0.59"	0.79"	4.72"	3.70"	-	-	-
HSK63AQSF3/16Q4.72"	0.187"	0.59"	0.79"	4.72"	3.70"	-	-	-
HSK63AQSF1/4Q4.72"	0.250"	0.83"	1.06"	4.72"	3.70"	1.42"	0.39"	M5
HSK63AQSF5/16Q4.72"	0.312"	0.83"	1.06"	4.72"	3.70"	1.42"	0.39"	M6
HSK63AQSF3/8Q4.72"	0.375"	0.94"	1.26"	4.72"	3.70"	1.65"	0.39"	M8x1
HSK63AQSF1/2Q4.72"	0.500"	1.06"	1.34"	4.72"	3.70"	1.85"	0.39"	M10x1
HSK63AQSF5/8Q4.72"	0.625"	1.06"	1.34"	4.72"	3.70"	1.97"	0.39"	M12x1
HSK63AQSF3/4Q4.72"	0.750"	1.30"	1.65"	4.72"	3.70"	2.05"	0.39"	M16x1
HSK63AQSF1Q4.72"	1.000"	1.73"	2.07"	4.72"	3.70"	2.44"	0.39"	M16x1
HSK63AQSF1Q1/4Q4.72"	1.250"	1.73"	2.07"	4.72"	3.70"	2.44"	0.39"	M16x1
HSK63AQSF1/8Q6.3"	0.125"	0.59"	1.06"	6.30"	5.28"	-	-	-
HSK63AQSF3/16Q6.3"	0.187"	0.59"	1.06"	6.30"	5.28"	-	-	-
HSK63AQSF1/4Q6.3"	0.250"	0.83"	1.26"	6.30"	5.28"	1.42"	0.39"	M5
HSK63AQSF5/16Q6.3"	0.312"	0.83"	1.26"	6.30"	5.28"	1.42"	0.39"	M6
HSK63AQSF3/8Q6.3"	0.375"	0.94"	1.34"	6.30"	5.28"	1.65"	0.39"	M8x1
HSK63AQSF1/2Q6.3"	0.500"	1.06"	1.65"	6.30"	5.28"	1.85"	0.39"	M10x1
HSK63AQSF5/8Q6.3"	0.625"	1.06"	1.65"	6.30"	5.28"	1.97"	0.39"	M12x1
HSK63AQSF3/4Q6.3"	0.750"	1.30"	2.01"	6.30"	5.28"	2.05"	0.39"	M16x1
HSK63AQSF1Q6.3"	1.000"	1.73"	2.07"	6.30"	5.28"	2.44"	0.39"	M16x1
HSK63AQSF1Q1/4Q6.3"	1.250"	1.73"	2.07"	6.30"	5.28"	2.44"	0.39"	M16x1

HSK Shrink Fit Chuck, 4.5°, Standard

A ↗	RPM	
≤0.003	G2.5/25000	AD

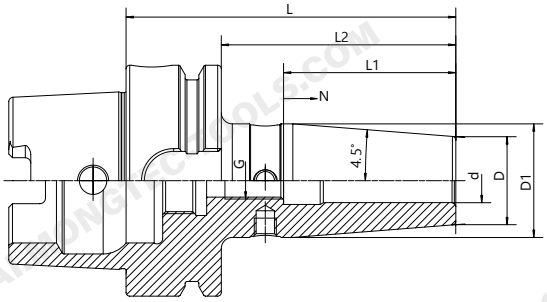

Size	d	D	D1	L	L2	L1	N	G
HSK80AQSF1/4Q3.35"	0.250"	0.83"	1.06"	3.35"	2.32"	1.42"	0.39"	M5
HSK80AQSF3/8Q3.54"	0.375"	0.94"	1.26"	3.54"	2.52"	1.65"	0.39"	M8x1
HSK80AQSF1/2Q3.74"	0.500"	1.06"	1.34"	3.74"	2.72"	1.85"	0.39"	M10x1
HSK80AQSF5/8Q3.94"	0.625"	1.06"	1.34"	3.94"	2.91"	1.97"	0.39"	M12x1
HSK80AQSF3/4Q4.13"	0.750"	1.30"	1.65"	4.13"	3.11"	2.05"	0.39"	M16x1
HSK80AQSF1Q4.53"	1.000"	1.73"	2.09"	4.53"	3.50"	2.44"	0.39"	M16x1
HSK80AQSF1Q1/4Q4.72"	1.250"	1.73"	2.09"	4.72"	3.70"	2.44"	0.39"	M16x1
HSK100AQSF1/4Q3.35"	0.250"	0.83"	1.06"	3.35"	2.20"	1.42"	0.39"	M5
HSK100AQSF3/8Q3.54"	0.375"	0.94"	1.26"	3.54"	2.40"	1.65"	0.39"	M8x1
HSK100AQSF1/2Q3.74"	0.500"	1.06"	1.34"	3.74"	2.60"	1.85"	0.39"	M10x1
HSK100AQSF5/8Q3.94"	0.625"	1.06"	1.34"	3.94"	2.80"	1.97"	0.39"	M12x1
HSK100AQSF3/4Q4.13"	0.750"	1.30"	1.65"	4.13"	2.99"	2.05"	0.39"	M16x1
HSK100AQSF1Q4.53"	1.000"	1.73"	2.09"	4.53"	3.39"	2.44"	0.39"	M16x1
HSK100AQSF1/4Q4.72"	0.250"	0.83"	1.06"	4.72"	3.58"	1.42"	0.39"	M5
HSK100AQSF3/8Q4.72"	0.375"	0.94"	1.26"	4.72"	3.58"	1.65"	0.39"	M8x1
HSK100AQSF1/2Q4.72"	0.500"	1.06"	1.34"	4.72"	3.58"	1.85"	0.39"	M10x1
HSK100AQSF5/8Q4.72"	0.625"	1.06"	1.34"	4.72"	3.58"	1.97"	0.39"	M12x1
HSK100AQSF3/4Q4.72"	0.750"	1.30"	1.65"	4.72"	3.58"	2.05"	0.39"	M16x1
HSK100AQSF1Q4.72"	1.000"	1.73"	2.09"	4.72"	3.58"	2.44"	0.39"	M16x1
HSK100AQSF1Q1/4Q4.72"	1.250"	1.73"	2.09"	4.72"	3.58"	2.44"	0.39"	M16x1
HSK100AQSF1/4Q6.30"	0.250"	0.83"	1.26"	6.30"	5.16"	1.42"	0.39"	M5
HSK100AQSF3/8Q6.30"	0.375"	0.94"	1.34"	6.30"	5.16"	1.65"	0.39"	M8x1
HSK100AQSF1/2Q6.30"	0.500"	1.06"	1.65"	6.30"	5.16"	1.85"	0.39"	M10x1
HSK100AQSF5/8Q6.30"	0.625"	1.06"	1.65"	6.30"	5.16"	1.97"	0.39"	M12x1
HSK100AQSF3/4Q6.30"	0.750"	1.30"	2.01"	6.30"	5.16"	2.05"	0.39"	M16x1
HSK100AQSF1Q6.30"	1.000"	1.73"	2.36"	6.30"	5.16"	2.44"	0.39"	M16x1
HSK100AQSF1Q1/4Q6.30"	1.250"	1.73"	2.36"	6.30"	5.16"	2.44"	0.39"	M16x1

HSK Shrink Fit Chuck, 4.5°, Standard

A ↗	RPM	
≤0.003	G2.5/25000	AD

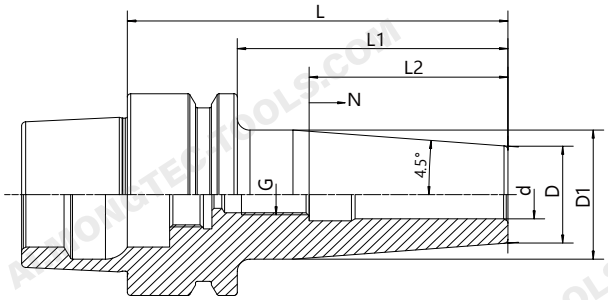

Size	d	D	D1	L	L2	L1	N	G
HSK25EQSF06Q50	6	15	19	50	40	36	5	M5
HSK32EQSF03Q60	3	15	20	60	40	-	-	-
HSK32EQSF04Q60	4	15	20	60	40	-	-	-
HSK32EQSF05Q60	5	15	20	60	40	-	-	-
HSK32EQSF06Q70	6	20	26	70	50	36	10	M5
HSK32EQSF08Q70	8	20	26	70	50	36	10	M6
HSK32EQSF10Q70	10	24	29	70	50	42	10	M8x1
HSK32EQSF12Q70	12	24	29	70	50	47	10	M10x1
HSK40EQSF03Q60	3	15	20	60	40	-	-	-
HSK40EQSF04Q60	4	15	20	60	40	-	-	-
HSK40EQSF05Q60	5	15	20	60	40	-	-	-
HSK40EQSF06Q65	6	21	27	65	45	36	10	M5
HSK40EQSF08Q65	8	21	27	65	45	36	10	M6
HSK40EQSF10Q65	10	24	30	65	45	42	10	M8x1
HSK40EQSF12Q65	12	24	30	65	45	47	10	M10x1
HSK40EQSF03Q80	3	15	20	80	60	-	-	-
HSK40EQSF04Q80	4	15	20	80	60	-	-	-
HSK40EQSF05Q80	5	15	20	80	60	-	-	-
HSK40EQSF06Q80	6	21	27	80	60	36	10	M5
HSK40EQSF08Q80	8	21	27	80	60	36	10	M6
HSK40EQSF10Q80	10	24	32	80	60	42	10	M8x1
HSK40EQSF12Q90	12	24	32	90	70	47	10	M10x1
HSK40EQSF16Q90	16	27	34	90	70	50	10	M12x1
HSK40EQSF03Q120	3	15	20	120	100	-	-	-
HSK40EQSF04Q120	4	15	20	120	100	-	-	-
HSK40EQSF05Q120	5	15	20	120	100	-	-	-
HSK40EQSF06Q120	6	21	27	120	100	36	10	M5
HSK40EQSF08Q120	8	21	27	120	100	36	10	M6
HSK40EQSF10Q120	10	24	32	120	100	42	10	M8x1
HSK40EQSF12Q120	12	24	32	120	100	47	10	M10x1

HSK Shrink Fit Chuck, 4.5°, Standard

A ↗	RPM	
≤0.003	G2.5/25000	AD

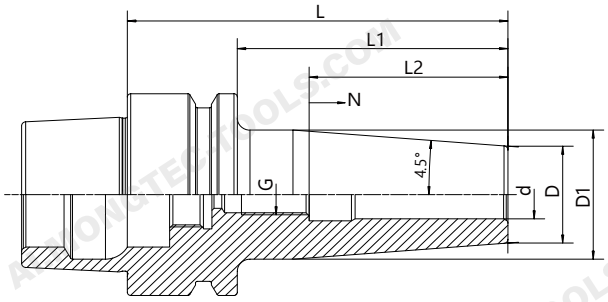

Size	d	D	D1	L	L2	L1	N	G
HSK50EQSF03Q80	3	15	20	80	54	-	-	-
HSK50EQSF04Q80	4	15	20	80	54	-	-	-
HSK50EQSF05Q80	5	15	20	80	54	-	-	-
HSK50EQSF06Q80	6	21	27	80	54	36	10	M5
HSK50EQSF08Q80	8	21	27	80	54	36	10	M6
HSK50EQSF10Q85	10	24	32	85	59	42	10	M8x1
HSK50EQSF12Q90	12	24	32	90	64	47	10	M10x1
HSK50EQSF14Q90	14	27	34	90	64	47	10	M10x1
HSK50EQSF16Q95	16	27	34	95	69	50	10	M12x1
HSK50EQSF18Q95	18	33	41	95	69	50	10	M12x1
HSK50EQSF20Q100	20	33	41	100	74	52	10	M16x1
HSK63EQSF06Q90	6	21	27	90	64	36	10	M5
HSK63EQSF08Q90	8	21	27	90	64	36	10	M6
HSK63EQSF10Q90	10	24	32	90	64	42	10	M8x1
HSK63EQSF12Q90	12	24	32	90	64	47	10	M10x1
HSK63EQSF14Q90	14	27	34	90	64	47	10	M10x1
HSK63EQSF16Q95	16	27	34	95	69	50	10	M12x1
HSK63EQSF18Q95	18	33	42	95	69	50	10	M12x1
HSK63EQSF20Q100	20	33	42	100	74	52	10	M16x1
HSK63EQSF25Q115	25	44	53	115	89	58	10	M16x1

Inch

Size	d	D	D1	L	L2	L1	N	G
HSK40EQSF1/8"-3.54"	1/8"	0.36"	0.47"	3.54"	2.76"	0.79"	-	-
HSK40EQSF3/16"-3.54"	3/16"	0.63"	0.71"	3.54"	2.76"	0.79"	-	-
HSK40EQSF1/4"-3.54"	1/4"	0.71"	1.06"	3.54"	2.76"	1.42"	0.39"	M5 x 0.8P
HSK40EQSF5/16"-3.54"	5/16"	0.83"	1.06"	3.54"	2.76"	1.42"	0.39"	M6 x 1.0P
HSK40EQSF3/8"-3.54"	3/8"	0.94"	1.26"	3.54"	2.76"	1.65"	0.39"	M8 x 1.25P

HSK Shrink Fit Chuck, 4.5°, Standard

A ↗	RPM	
≤0.003	G2.5/25000	AD

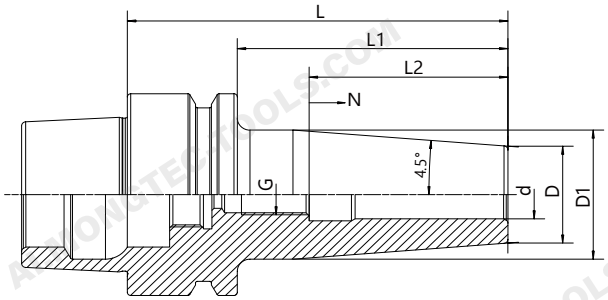

Size	d	D	D1	L	L2	L1	N	G
HSK40FQSF03Q60	3	15	20	60	40	-	-	-
HSK40FQSF04Q60	4	15	20	60	40	-	-	-
HSK40FQSF05Q60	5	15	20	60	40	-	-	-
HSK40FQSF06Q65	6	21	27	65	45	36	5	M5
HSK40FQSF08Q65	8	21	27	65	45	36	5	M6
HSK40FQSF10Q65	10	24	31	65	45	42	5	M8x1
HSK40FQSF12Q65	12	24	31	65	45	42	5	M10x1
HSK40FQSF06Q80	6	21	27	80	60	36	10	M5
HSK40FQSF08Q80	8	21	27	80	60	36	10	M6
HSK40FQSF10Q80	10	24	32	80	60	42	10	M8x1
HSK40FQSF12Q90	12	24	32	90	70	47	10	M10x1
HSK40FQSF16Q90	16	27	34	90	70	50	10	M12x1
HSK63FQSF03-90	3	15	20	90	64	-	-	-
HSK63FQSF04Q90	4	15	20	90	54	-	-	-
HSK63FQSF05-90	5	15	20	90	54	-	-	-
HSK63FQSF06Q90	6	21	27	90	64	36	10	M5
HSK63FQSF08Q90	8	21	27	90	64	36	10	M6
HSK63FQSF10Q90	10	24	32	90	64	42	10	M8x1
HSK63FQSF12Q90	12	24	32	90	64	47	10	M10x1
HSK63FQSF14Q95	14	27	34	95	69	47	10	M10x1
HSK63FQSF16Q95	16	27	34	95	69	50	10	M12x1
HSK63FQSF18Q95	18	33	42	95	69	50	10	M12x1
HSK63FQSF20Q100	20	33	42	100	74	52	10	M16x1
HSK63FQSF25Q115	25	36	42	115	89	58	10	M16x1

HSK Shrink Fit Chuck, 4.5°, Standard

A ↗	RPM	
≤0.003	G2.5/25000	AD

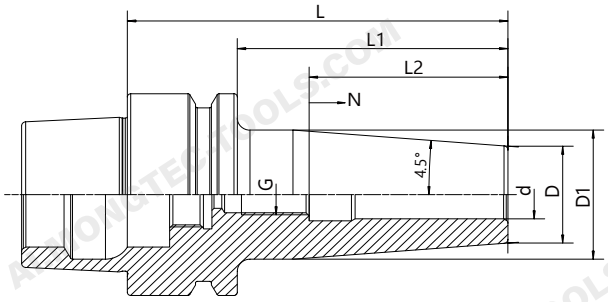

Size	d	D	D1	L	L2	L1	N	G
HSK63FQSF03Q120	3	15	20	120	94	-	-	-
HSK63FQSF04Q120	4	15	20	120	94	-	-	-
HSK63FQSF05Q120	5	15	20	120	94	-	-	-
HSK63FQSF06Q120	6	21	27	120	94	36	10	M5
HSK63FQSF08Q120	8	21	27	120	94	36	10	M6
HSK63FQSF10Q120	10	24	32	120	94	42	10	M8x1
HSK63FQSF12Q120	12	24	32	120	94	47	10	M10x1
HSK63FQSF14Q120	14	27	34	120	94	47	10	M10x1
HSK63FQSF16Q120	16	27	34	120	94	50	10	M12x1
HSK63FQSF18Q120	18	33	42	120	94	50	10	M12x1
HSK63FQSF20Q120	20	33	42	120	94	52	10	M16x1
HSK63FQSF03Q160	3	15	27	160	134	-	-	-
HSK63FQSF04Q160	4	15	27	160	134	-	-	-
HSK63FQSF05Q160	5	15	27	160	134	-	-	-
HSK63FQSF06Q160	6	21	32	160	134	36	10	M5
HSK63FQSF08Q160	8	21	32	160	134	36	10	M6
HSK63FQSF10Q160	10	24	34	160	134	42	10	M8x1
HSK63FQSF12Q160	12	24	34	160	134	47	10	M10x1
HSK63FQSF14Q160	14	27	42	160	134	47	10	M10x1
HSK63FQSF16Q160	16	27	42	160	134	50	10	M12x1
HSK63FQSF18Q160	18	33	51	160	134	50	10	M12x1
HSK63FQSF20Q160	20	33	51	160	134	52	10	M16x1

Inch

Size	d	D	D1	L	L2	L1	N	G
HSK63FQSF1/4"-3.54"	1/4"	0.83"	1.06"	3.54	2.52	1.42"	-	M5
HSK63FQSF5/16"-3.54"	5/16"	0.83"	1.06"	3.54	2.52	1.42"	-	M6
HSK63FQSF3/8"-3.54"	3/8"	0.94"	1.26"	3.54	2.52	1.65"	-	M8 x 1
HSK63FQSF1/2"-3.54"	1/2"	1.06"	1.34"	3.54	2.52	1.85"	-	M10 x 1
HSK63FQSF5/8"-3.74"	5/8"	1.06"	1.34"	3.74"	2..72	1.97"	-	M12 x 1
HSK63FQSF3/4"-3.94"	3/4"	1.30"	1.65"	3.94"	2.91	2.05"	-	M16 x1
HSK63FQSF1.0"-4.53	1"	1.73"	2.09"	4.53"	3.5	2.44"	-	M160 x 1

BT Shrink Fit Chuck, 4.5°, Coolant

A ↗	RPM	
≤0.003	G2.5/25000	AD

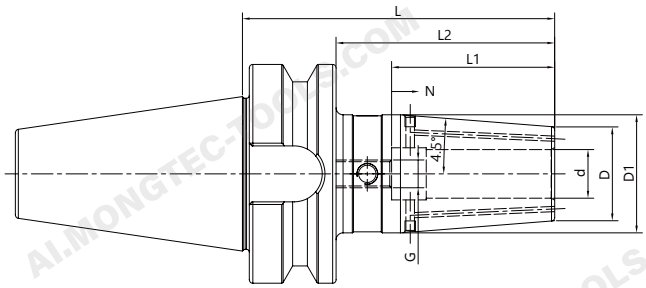

Size	d	D	D1	L	L2	L1	N	G
BT40QSF03Q80K	3	15	20	80	53	-	-	-
BT40QSF04Q80K	4	15	20	80	53	-	-	-
BT40QSF05Q80K	5	15	20	80	53	-	-	-
BT40QSF06Q90K	6	21	27	90	63	36	10	M5
BT40QSF08Q90K	8	21	27	90	63	36	10	M6
BT40QSF10Q90K	10	24	32	90	63	42	10	M8x1
BT40QSF12Q90K	12	24	32	90	63	47	10	M10x1
BT40QSF14Q90K	14	27	34	90	63	47	10	M10x1
BT40QSF16Q90K	16	27	34	90	63	50	10	M12x1
BT40QSF18Q90K	18	33	42	90	63	50	10	M12x1
BT40QSF20Q90K	20	33	42	90	63	52	10	M16x1
BT40QSF25Q100K	25	44	53	100	73	58	10	M16x1
BT40QSF32Q100K	32	44	53	100	73	62	10	M16x1
BT40QSF06Q120K	6	21	27	120	93	36	10	M5
BT40QSF08Q120K	8	21	27	120	93	36	10	M6
BT40QSF10Q120K	10	24	32	120	93	42	10	M8x1
BT40QSF12Q120K	12	24	32	120	93	47	10	M10x1
BT40QSF14Q120K	14	27	34	120	93	47	10	M10x1
BT40QSF16Q120K	16	27	34	120	93	50	10	M12x1
BT40QSF18Q120K	18	33	42	120	93	50	10	M12x1
BT40QSF20Q120K	20	33	42	120	93	52	10	M16x1
BT40QSF25Q120K	25	44	53	120	93	58	10	M16x1
BT40QSF32Q120K	32	44	53	120	93	62	10	M16x1
BT40QSF06Q160K	6	21	32	160	133	36	10	M5
BT40QSF08Q160K	8	21	32	160	133	36	10	M6
BT40QSF10Q160K	10	24	34	160	133	42	10	M8x1
BT40QSF12Q160K	12	24	34	160	133	47	10	M10x1
BT40QSF14Q160K	14	27	42	160	133	47	10	M10x1
BT40QSF16Q160K	16	27	42	160	133	50	10	M12x1
BT40QSF18Q160K	18	33	51	160	133	50	10	M12x1
BT40QSF20Q160K	20	33	51	160	133	52	10	M16x1
BT40QSF25Q160K	25	44	53	160	133	58	10	M16x1
BT40QSF32Q160K	32	44	53	160	133	62	10	M16x1

BT Shrink Fit Chuck, 4.5°, Coolant

A ↗	RPM	
≤0.003	G2.5/25000	AD

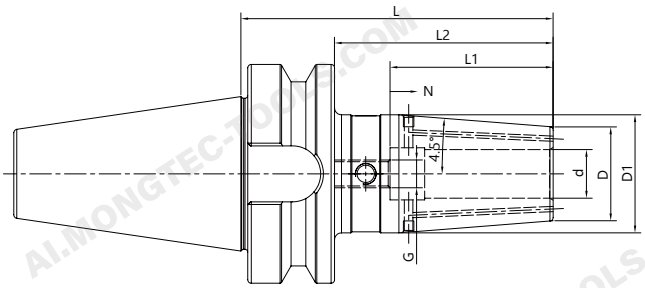

Size	d	D	D1	L	L2	L1	N	G
BT50QSF06Q100K	6	21	27	100	62	36	10	M5
BT50QSF08Q100K	8	21	27	100	62	36	10	M6
BT50QSF10Q100K	10	24	32	100	62	42	10	M8x1
BT50QSF12Q100K	12	24	32	100	62	47	10	M10x1
BT50QSF14Q100K	14	27	34	100	62	47	10	M10x1
BT50QSF16Q100K	16	27	34	100	62	50	10	M12x1
BT50QSF18Q100K	18	33	42	100	62	50	10	M12x1
BT50QSF20Q100K	20	33	42	100	62	52	10	M16x1
BT50QSF25Q110K	25	44	53	110	72	58	10	M16x1
BT50QSF32Q110K	32	44	53	110	72	62	10	M16x1
BT50QSF06Q120K	6	21	27	120	82	36	10	M5
BT50QSF08Q120K	8	21	27	120	82	36	10	M6
BT50QSF10Q120K	10	24	32	120	82	42	10	M8x1
BT50QSF12Q120K	12	24	32	120	82	47	10	M10x1
BT50QSF14Q120K	14	27	34	120	82	47	10	M10x1
BT50QSF16Q120K	16	27	34	120	82	50	10	M12x1
BT50QSF18Q120K	18	33	42	120	82	50	10	M12x1
BT50QSF20Q120K	20	33	42	120	82	52	10	M16x1
BT50QSF25Q120K	25	44	53	120	82	58	10	M16x1
BT50QSF32Q120K	32	44	53	120	82	62	10	M16x1
BT50QSF06Q160K	6	21	32	160	122	36	10	M5
BT50QSF08Q160K	8	21	32	160	122	36	10	M6
BT50QSF10Q160K	10	24	34	160	122	42	10	M8x1
BT50QSF12Q160K	12	24	34	160	122	47	10	M10x1
BT50QSF14Q160K	14	27	42	160	122	47	10	M10x1
BT50QSF16Q160K	16	27	42	160	122	50	10	M12x1
BT50QSF18Q160K	18	33	51	160	122	50	10	M12x1
BT50QSF20Q160K	20	33	51	160	122	52	10	M16x1
BT50QSF25Q160K	25	44	60	160	122	58	10	M16x1
BT50QSF32Q160K	32	44	60	160	122	62	10	M16x1

BBT Shrink Fit Chuck, 4.5°, Coolant

A ↗	RPM	
≤0.003	G2.5/25000	AD

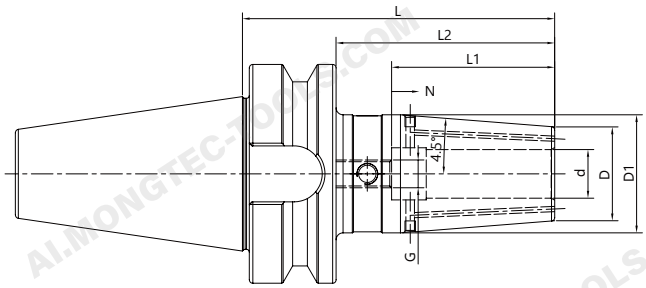

Size	d	D	D1	L	L2	L1	N	G
BBT40QSF03Q80K	3	15	20	80	53	-	-	-
BBT40QSF04Q80K	4	15	20	80	53	-	-	-
BBT40QSF05Q80K	5	15	20	80	53	-	-	-
BBT40QSF06Q90K	6	21	27	90	63	36	10	M5
BBT40QSF08Q90K	8	21	27	90	63	36	10	M6
BBT40QSF10Q90K	10	24	32	90	63	42	10	M8x1
BBT40QSF12Q90K	12	24	32	90	63	47	10	M10x1
BBT40QSF14Q90K	14	27	34	90	63	47	10	M10x1
BBT40QSF16Q90K	16	27	34	90	63	50	10	M12x1
BBT40QSF18Q90K	18	33	42	90	63	50	10	M12x1
BBT40QSF20Q90K	20	33	42	90	63	52	10	M16x1
BBT40QSF25Q100K	25	44	53	100	73	58	10	M16x1
BBT40QSF32Q100K	32	44	53	100	73	62	10	M16x1
BBT40QSF06Q120K	6	21	27	120	93	36	10	M5
BBT40QSF08Q120K	8	21	27	120	93	36	10	M6
BBT40QSF10Q120K	10	24	32	120	93	42	10	M8x1
BBT40QSF12Q120K	12	24	32	120	93	47	10	M10x1
BBT40QSF14Q120K	14	27	34	120	93	47	10	M10x1
BBT40QSF16Q120K	16	27	34	120	93	50	10	M12x1
BBT40QSF18Q120K	18	33	42	120	93	50	10	M12x1
BBT40QSF20Q120K	20	33	42	120	93	52	10	M16x1
BBT40QSF25Q120K	25	44	53	120	93	58	10	M16x1
BBT40QSF32Q120K	32	44	53	120	93	62	10	M16x1
BBT40QSF06Q160K	6	21	32	160	133	36	10	M5
BBT40QSF08Q160K	8	21	32	160	133	36	10	M6
BBT40QSF10Q160K	10	24	34	160	133	42	10	M8x1
BBT40QSF12Q160K	12	24	34	160	133	47	10	M10x1
BBT40QSF14Q160K	14	27	42	160	133	47	10	M10x1
BBT40QSF16Q160K	16	27	42	160	133	50	10	M12x1
BBT40QSF18Q160K	18	33	51	160	133	50	10	M12x1
BBT40QSF20Q160K	20	33	51	160	133	52	10	M16x1
BBT40QSF25Q160K	25	44	53	160	133	58	10	M16x1
BBT40QSF32Q160K	32	44	53	160	133	62	10	M16x1

BBT Shrink Fit Chuck, 4.5°, Coolant

A ↗	RPM	
≤0.003	G2.5/25000	AD

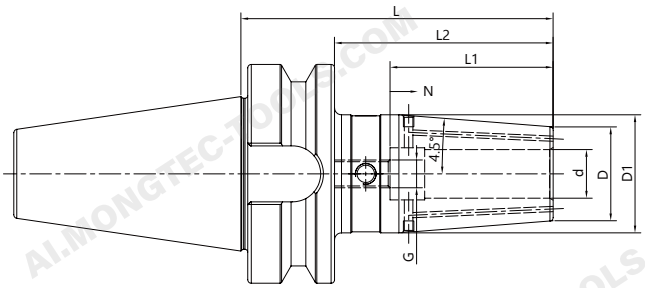

Size	d	D	D1	L	L2	L1	N	G
BBT50QSF06Q100K	6	21	27	100	62	36	10	M5
BBT50QSF08Q100K	8	21	27	100	62	36	10	M6
BBT50QSF10Q100K	10	24	32	100	62	42	10	M8x1
BBT50QSF12Q100K	12	24	32	100	62	47	10	M10x1
BBT50QSF14Q100K	14	27	34	100	62	47	10	M10x1
BBT50QSF16Q100K	16	27	34	100	62	50	10	M12x1
BBT50QSF18Q100K	18	33	42	100	62	50	10	M12x1
BBT50QSF20Q100K	20	33	42	100	62	52	10	M16x1
BBT50QSF25Q110K	25	44	53	110	72	58	10	M16x1
BBT50QSF32Q110K	32	44	53	110	72	62	10	M16x1
BBT50QSF06Q120K	6	21	27	120	82	36	10	M5
BBT50QSF08Q120K	8	21	27	120	82	36	10	M6
BBT50QSF10Q120K	10	24	32	120	82	42	10	M8x1
BBT50QSF12Q120K	12	24	32	120	82	47	10	M10x1
BBT50QSF14Q120K	14	27	34	120	82	47	10	M10x1
BBT50QSF16Q120K	16	27	34	120	82	50	10	M12x1
BBT50QSF18Q120K	18	33	42	120	82	50	10	M12x1
BBT50QSF20Q120K	20	33	42	120	82	52	10	M16x1
BBT50QSF25Q120K	25	44	53	120	82	58	10	M16x1
BBT50QSF32Q120K	32	44	53	120	82	62	10	M16x1
BBT50QSF06Q160K	6	21	32	160	122	36	10	M5
BBT50QSF08Q160K	8	21	32	160	122	36	10	M6
BBT50QSF10Q160K	10	24	34	160	122	42	10	M8x1
BBT50QSF12Q160K	12	24	34	160	122	47	10	M10x1
BBT50QSF14Q160K	14	27	42	160	122	47	10	M10x1
BBT50QSF16Q160K	16	27	42	160	122	50	10	M12x1
BBT50QSF18Q160K	18	33	51	160	122	50	10	M12x1
BBT50QSF20Q160K	20	33	51	160	122	52	10	M16x1
BBT50QSF25Q160K	25	44	60	160	122	58	10	M16x1
BBT50QSF32Q160K	32	44	60	160	122	62	10	M16x1

SK Shrink Fit Chuck, 4.5°, Coolant

A ↗	RPM	
≤0.003	G2.5/25000	AD/B

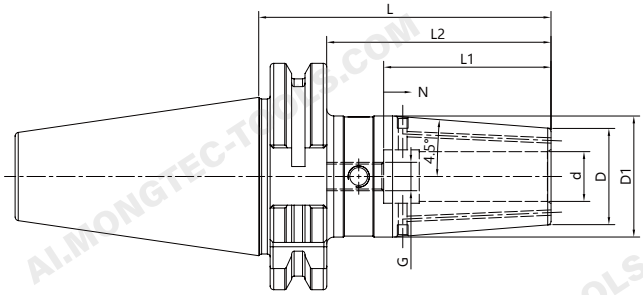

Size	d	D	D1	L	L2	L1	N	G
SK40QSF03Q80K	3	15	20	80	60.9	-	-	-
SK40QSF04Q80K	4	15	20	80	60.9	-	-	-
SK40QSF05Q80K	5	15	20	80	60.9	-	-	-
SK40QSF06Q80K	6	21	27	80	60.9	36	10	M5
SK40QSF08Q80K	8	21	27	80	60.9	36	10	M6
SK40QSF10Q80K	10	24	32	80	60.9	42	10	M8x1
SK40QSF12Q80K	12	24	32	80	60.9	47	10	M10x1
SK40QSF14Q80K	14	27	34	80	60.9	47	10	M10x1
SK40QSF16Q80K	16	27	34	80	60.9	50	10	M12x1
SK40QSF18Q80K	18	33	42	80	60.9	50	10	M12x1
SK40QSF20Q80K	20	33	42	80	60.9	52	10	M16x1
SK40QSF25Q100K	25	44	50	100	80.9	58	10	M16x1
SK40QSF32Q100K	32	44	50	100	80.9	62	10	M16x1
SK40QSF06Q120K	6	21	27	120	100.9	36	10	M5
SK40QSF08Q120K	8	21	27	120	100.9	36	10	M6
SK40QSF10Q120K	10	24	32	120	100.9	42	10	M8x1
SK40QSF12Q120K	12	24	32	120	100.9	47	10	M10x1
SK40QSF14Q120K	14	27	34	120	100.9	47	10	M10x1
SK40QSF16Q120K	16	27	34	120	100.9	50	10	M12x1
SK40QSF18Q120K	18	33	42	120	100.9	50	10	M12x1
SK40QSF20Q120K	20	33	42	120	100.9	52	10	M16x1
SK40QSF06Q160K	6	21	32	160	140.9	36	10	M5
SK40QSF08Q160K	8	21	32	160	140.9	36	10	M6
SK40QSF10Q160K	10	24	34	160	140.9	42	10	M8x1
SK40QSF12Q160K	12	24	34	160	140.9	47	10	M10x1
SK40QSF14Q160K	14	27	42	160	140.9	47	10	M10x1
SK40QSF16Q160K	16	27	42	160	140.9	50	10	M12x1
SK40QSF18Q160K	18	33	50	160	140.9	50	10	M12x1
SK40QSF20Q160K	20	33	50	160	140.9	52	10	M16x1

SK Shrink Fit Chuck, 4.5°, Coolant

A ↗	RPM	
≤0.003	G2.5/25000	AD/B

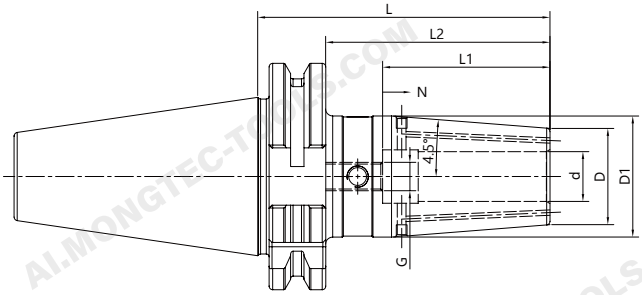

Size	d	D	D1	L	L2	L1	N	G
SK50QSF06Q80K	6	21	27	80	60.9	36	10	M5
SK50QSF08Q80K	8	21	27	80	60.9	36	10	M6
SK50QSF10Q80K	10	24	32	80	60.9	42	10	M8x1
SK50QSF12Q80K	12	24	32	80	60.9	47	10	M10x1
SK50QSF14Q80K	14	27	34	80	60.9	47	10	M10x1
SK50QSF16Q80K	16	27	34	80	60.9	50	10	M12x1
SK50QSF18Q80K	18	33	42	80	60.9	50	10	M12x1
SK50QSF20Q80K	20	33	42	80	60.9	52	10	M16x1
SK50QSF25-90K	25	44	53	90	70.9	58	10	M16x1
SK50QSF32Q90K	32	44	53	90	70.9	62	10	M16x1
SK50QSF06Q120K	6	21	27	120	100.9	36	10	M5
SK50QSF08Q120K	8	21	27	120	100.9	36	10	M6
SK50QSF10Q120K	10	24	32	120	100.9	42	10	M8x1
SK50QSF12Q120K	12	24	32	120	100.9	47	10	M10x1
SK50QSF14Q120K	14	27	34	120	100.9	47	10	M10x1
SK50QSF16Q120K	16	27	34	120	100.9	50	10	M12x1
SK50QSF18Q120K	18	33	42	120	100.9	50	10	M12x1
SK50QSF20Q120K	20	33	42	120	100.9	52	10	M16x1
SK50QSF25Q120K	25	44	53	120	100.9	58	10	M16x1
SK50QSF32Q120K	32	44	53	120	100.9	62	10	M16x1
SK50QSF06Q160K	6	21	32	160	140.9	36	10	M5
SK50QSF08Q160K	8	21	32	160	140.9	36	10	M6
SK50QSF10Q160K	10	24	34	160	140.9	42	10	M8x1
SK50QSF12Q160K	12	24	34	160	140.9	47	10	M10x1
SK50QSF14Q160K	14	27	42	160	140.9	47	10	M10x1
SK50QSF16Q160K	16	27	42	160	140.9	50	10	M12x1
SK50QSF18Q160K	18	33	51	160	140.9	50	10	M12x1
SK50QSF20Q160K	20	33	51	160	140.9	52	10	M16x1
SK50QSF25Q160K	25	44	60	160	140.9	58	10	M16x1
SK50QSF32Q160K	32	44	60	160	140.9	62	10	M16x1

CAT Shrink Fit Chuck, 4.5°, Coolant

A ↗	RPM	
≤0.003	G2.5/25000	AD/B

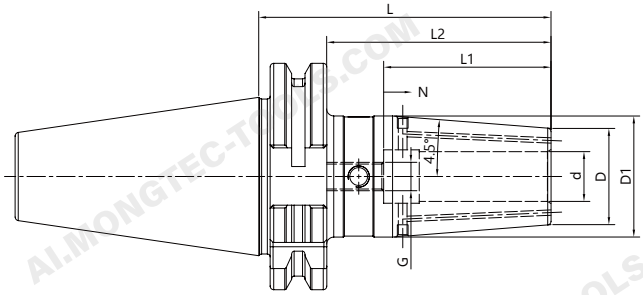

Size	d	D	D1	L	L2	L1	N	G
CAT40QSF03Q80K	3	15	20	80	60.9	-	-	-
CAT40QSF04Q80K	4	15	20	80	60.9	-	-	-
CAT40QSF05Q80K	5	15	20	80	60.9	-	-	-
CAT40QSF06Q80K	6	21	27	80	60.9	36	10	M5
CAT40QSF08Q80K	8	21	27	80	60.9	36	10	M6
CAT40QSF10Q80K	10	24	31	80	60.9	42	10	M8x1
CAT40QSF12Q80K	12	24	31	80	60.9	47	10	M10x1
CAT40QSF14Q80K	14	27	34	80	60.9	47	10	M10x1
CAT40QSF16Q80K	16	27	34	80	60.9	50	10	M12x1
CAT40QSF18Q80K	18	33	40	80	60.9	50	10	M12x1
CAT40QSF20Q80K	20	33	40	80	60.9	52	10	M16x1
CAT40QSF25Q100K	25	44	50	100	80.9	58	10	M16x1
CAT40QSF32Q100K	32	44	50	100	80.9	62	10	M16x1
CAT40QSF06Q120K	6	21	27	120	100.9	36	10	M5
CAT40QSF08Q120K	8	21	27	120	100.9	36	10	M6
CAT40QSF10Q120K	10	24	32	120	100.9	42	10	M8x1
CAT40QSF12Q120K	12	24	32	120	100.9	47	10	M10x1
CAT40QSF14Q120K	14	27	34	120	100.9	47	10	M10x1
CAT40QSF16Q120K	16	27	34	120	100.9	50	10	M12x1
CAT40QSF18Q120K	18	33	42	120	100.9	50	10	M12x1
CAT40QSF20Q120K	20	33	42	120	100.9	52	10	M16x1
CAT40QSF25Q120K	25	44	50	120	100.9	58	10	M16x1
CAT40QSF06Q160K	6	21	32	160	140.9	36	10	M5
CAT40QSF08Q160K	8	21	32	160	140.9	36	10	M6
CAT40QSF10Q160K	10	24	34	160	140.9	42	10	M8x1
CAT40QSF12Q160K	12	24	34	160	140.9	47	10	M10x1
CAT40QSF14Q160K	14	27	42	160	140.9	47	10	M10x1
CAT40QSF16Q160K	16	27	42	160	140.9	50	10	M12x1
CAT40QSF18Q160K	18	33	50	160	140.9	50	10	M12x1
CAT40QSF20Q160K	20	33	50	160	140.9	52	10	M16x1
CAT40QSF25Q160K	25	44	50	160	140.9	58	10	M16x1
CAT40QSF32Q160K	32	44	50	160	140.9	62	10	M16x1

CAT Shrink Fit Chuck, 4.5°, Coolant

A ↗	RPM	
≤0.003	G2.5/25000	AD/B

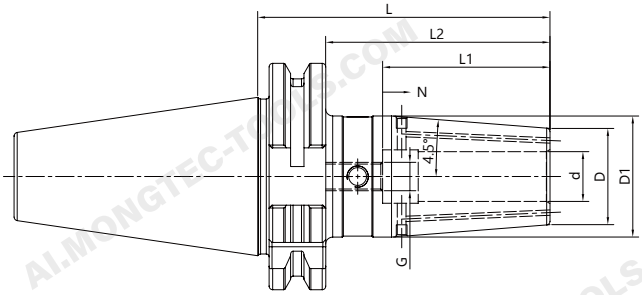

Size	d	D	D1	L	L2	L1	N	G
CAT50QSF06Q80K	6	21	27	80	60.9	36	10	M5
CAT50QSF08Q80K	8	21	27	80	60.9	36	10	M6
CAT50QSF10Q80K	10	24	31	80	60.9	42	10	M8x1
CAT50QSF12Q80K	12	24	31	80	60.9	47	10	M10x1
CAT50QSF14Q80K	14	27	34	80	60.9	47	10	M10x1
CAT50QSF16Q80K	16	27	34	80	60.9	50	10	M12x1
CAT50QSF18Q80K	18	33	40	80	60.9	50	10	M12x1
CAT50QSF20Q80K	20	33	39.5	80	60.9	52	10	M16x1
CAT50QSF25Q100K	25	44	52.5	100	80.9	58	10	M16x1
CAT50QSF32Q100K	32	44	52.5	100	80.9	62	10	M16x1
CAT50QSF06Q120K	6	21	27	120	100.9	36	10	M5
CAT50QSF08Q120K	8	21	27	120	100.9	36	10	M6
CAT50QSF10Q120K	10	24	32	120	100.9	42	10	M8x1
CAT50QSF12Q120K	12	24	32	120	100.9	47	10	M10x1
CAT50QSF14Q120K	14	27	34	120	100.9	47	10	M10x1
CAT50QSF16Q120K	16	27	34	120	100.9	50	10	M12x1
CAT50QSF18Q120K	18	33	42	120	100.9	50	10	M12x1
CAT50QSF20Q120K	20	33	42	120	100.9	52	10	M16x1
CAT50QSF25Q120K	25	44	53	120	100.9	58	10	M16x1
CAT50QSF32Q120K	32	44	53	120	100.9	62	10	M16x1

CAT Shrink Fit Chuck, 4.5°, Coolant

A ↗	RPM	
≤0.003	G2.5/25000	AD/B

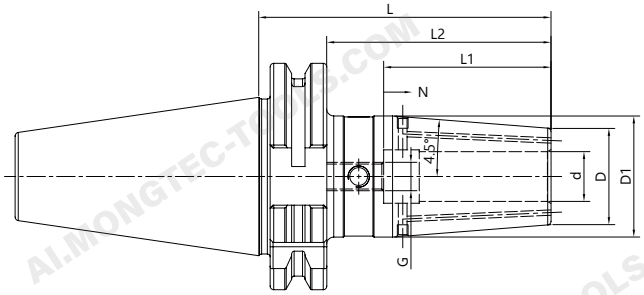

Size	d	D	D1	L	L2	L1	N	G
CAT50QSF06Q160K	6	21	32	160	140.9	36	10	M5
CAT50QSF08Q160K	8	21	32	160	140.9	36	10	M6
CAT50QSF10Q160K	10	24	34	160	140.9	42	10	M8x1
CAT50QSF12Q160K	12	24	34	160	140.9	47	10	M10x1
CAT50QSF14Q160K	14	27	42	160	140.9	47	10	M10x1
CAT50QSF16Q160K	16	27	42	160	140.9	50	10	M12x1
CAT50QSF18Q160K	18	33	51	160	140.9	50	10	M12x1
CAT50QSF20Q160K	20	33	51	160	140.9	52	10	M16x1
CAT50QSF25Q160K	25	44	60	160	140.9	58	10	M16x1
CAT50QSF32Q160K	32	44	60	160	140.9	62	10	M16x1
CAT50QSF06Q200K	6	21	32	200	180.9	36	10	M5
CAT50QSF08Q200K	8	21	32	200	180.9	36	10	M6
CAT50QSF10Q200K	10	24	34	200	180.9	42	10	M8x1
CAT50QSF12Q200K	12	24	34	200	180.9	47	10	M10x1
CAT50QSF14Q200K	14	27	42	200	180.9	47	10	M10x1
CAT50QSF16Q200K	16	27	42	200	180.9	50	10	M12x1
CAT50QSF18Q200K	18	33	51	200	180.9	50	10	M12x1
CAT50QSF20Q200K	20	33	51	200	180.9	52	10	M16x1
CAT50QSF25Q200K	25	44	60	200	180.9	58	10	M16x1
CAT50QSF32Q200K	32	44	60	200	180.9	62	10	M16x1

CAT Shrink Fit Chuck, 4.5°, Coolant

A ↗	RPM	
≤0.003	G2.5/25000	AD/B

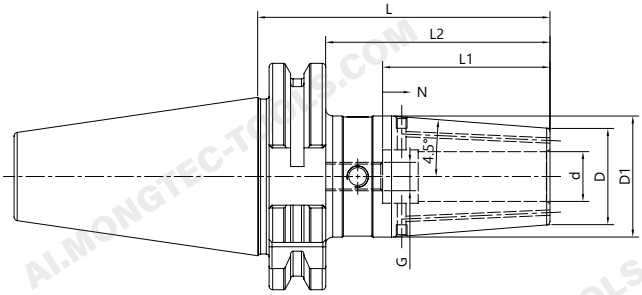

Size	d	D	D1	L	L2	L1	N	G
CAT40QSF1/8Q3.15"K	0.125"	0.59"	0.79"	3.15"	2.40"	-	-	-
CAT40QSF3/16Q3.15"K	0.187"	0.59"	0.79"	3.15"	2.40"	-	-	-
CAT40QSF1/4Q3.15"K	0.250"	0.83"	1.06"	3.15"	2.40"	1.42"	0.39"	M5
CAT40QSF5/16Q3.15"K	0.312"	0.83"	1.06"	3.15"	2.40"	1.42"	0.39"	M6
CAT40QSF3/8Q3.15"K	0.375"	0.94"	1.26"	3.15"	2.40"	1.65"	0.39"	M8x1
CAT40QSF1/2Q3.15"K	0.500"	1.06"	1.34"	3.15"	2.40"	1.85"	0.39"	M10x1
CAT40QSF5/8Q3.15"K	0.625"	1.06"	1.34"	3.15"	2.40"	1.97"	0.39"	M12x1
CAT40QSF3/4Q3.15"K	0.750"	1.30"	1.65"	3.15"	2.40"	2.05"	0.39"	M16x1
CAT40QSF1Q3.94"K	1.000"	1.73"	2.09"	3.94"	2.56"	2.44"	0.39"	M16x1
CAT40QSF1Q1/4Q3.94"K	1.250"	1.73"	2.09"	3.94"	2.56"	2.44"	0.39"	M16x1
CAT40QSF1/8Q4.72"K	0.125"	0.59"	0.79"	4.72"	3.34"	-	-	-
CAT40QSF3/16Q4.72"K	0.187"	0.59"	0.79"	4.72"	3.34"	-	-	-
CAT40QSF1/4Q4.72"K	0.250"	0.83"	1.06"	4.72"	3.34"	1.42"	0.39"	M5
CAT40QSF5/16Q4.72"K	0.312"	0.83"	1.06"	4.72"	3.34"	1.42"	0.39"	M6
CAT40QSF3/8Q4.72"K	0.375"	0.94"	1.26"	4.72"	3.34"	1.65"	0.39"	M8x1
CAT40QSF1/2Q4.72"K	0.500"	1.06"	1.34"	4.72"	3.34"	1.85"	0.39"	M10x1
CAT40QSF5/8Q4.72"K	0.625"	1.06"	1.34"	4.72"	3.34"	1.97"	0.39"	M12x1
CAT40QSF3/4Q4.72"K	0.750"	1.30"	1.65"	4.72"	3.34"	2.05"	0.39"	M16x1
CAT40QSF1Q4.72"K	1.000"	1.73"	2.09"	4.72"	3.34"	2.44"	0.39"	M16x1
CAT40QSF1Q1/4Q4.72"K	1.250"	1.73"	2.09"	4.72"	3.34"	2.44"	0.39"	M16x1
CAT40QSF1/8Q6.30"K	0.125"	0.59"	0.79"	6.30"	4.92"	-	-	-
CAT40QSF3/16Q6.30"K	0.187"	0.59"	0.79"	6.30"	4.92"	-	-	-
CAT40QSF1/4Q6.30"K	0.250"	0.83"	1.26"	6.30"	4.92"	1.42"	0.39"	M5
CAT40QSF5/16Q6.30"K	0.312"	0.83"	1.26"	6.30"	4.92"	1.42"	0.39"	M6
CAT40QSF3/8Q6.30"K	0.375"	0.94"	1.34"	6.30"	4.92"	1.65"	0.39"	M8x1
CAT40QSF1/2Q6.30"K	0.500"	1.06"	1.65"	6.30"	4.92"	1.85"	0.39"	M10x1
CAT40QSF5/8Q6.30"K	0.625"	1.06"	1.65"	6.30"	4.92"	1.97"	0.39"	M12x1
CAT40QSF3/4Q6.30"K	0.750"	1.30"	1.75"	6.30"	4.92"	2.05"	0.39"	M16x1
CAT40QSF1Q6.30"K	1.000"	1.73"	2.09"	6.30"	4.92"	2.44"	0.39"	M16x1
CAT40QSF1Q1/4Q6.30"K	1.250"	1.73"	2.09"	6.30"	4.92"	2.44"	0.39"	M16x1

CAT Shrink Fit Chuck, 4.5°, Coolant

A ↗	RPM	
≤0.003	G2.5/25000	AD/B

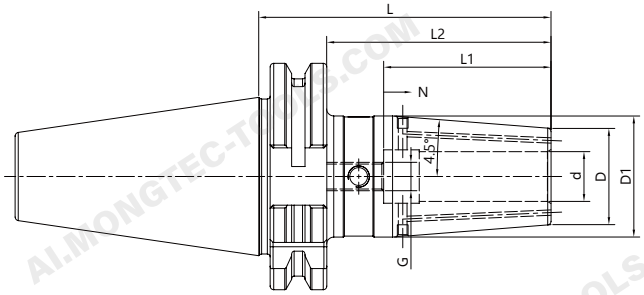

Size	d	D	D1	L	L2	L1	N	G
CAT50QSF1/4Q3.15"K	0.250"	0.83"	1.06"	3.15"	2.36"	1.42"	0.39"	M5
CAT50QSF3/8Q3.15"K	0.375"	0.94"	1.26"	3.15"	2.36"	1.65"	0.39"	M8x1
CAT50QSF1/2Q3.15"K	0.500"	1.06"	1.34"	3.15"	2.36"	1.85"	0.39"	M10x1
CAT50QSF5/8Q3.15"K	0.625"	1.06"	1.34"	3.15"	2.36"	1.97"	0.39"	M12x1
CAT50QSF3/4Q3.15"K	0.750"	1.30"	1.65"	3.15"	2.36"	2.05"	0.39"	M16x1
CAT50QSF1Q3.94"K	1.000"	1.73"	2.09"	3.94"	2.75"	2.44"	0.39"	M16x1
CAT50QSF1Q1/4Q3.94"K	1.250"	1.73"	2.09"	3.94"	2.75"	2.44"	0.39"	M16x1
CAT50QSF1/4Q4.72"K	0.250"	0.83"	1.06"	4.72"	3.35"	1.42"	0.39"	M5
CAT50QSF3/8Q4.72"K	0.375"	0.94"	1.26"	4.72"	3.35"	1.65"	0.39"	M8x1
CAT50QSF1/2Q4.72"K	0.500"	1.06"	1.34"	4.72"	3.35"	1.85"	0.39"	M10x1
CAT50QSF5/8Q4.72"K	0.625"	1.06"	1.34"	4.72"	3.35"	1.97"	0.39"	M12x1
CAT50QSF3/4Q4.72"K	0.750"	1.30"	1.65"	4.72"	3.35"	2.05"	0.39"	M16x1
CAT50QSF1Q4.72"K	1.000"	1.73"	2.09"	4.72"	3.35"	2.44"	0.39"	M16x1
CAT50QSF1Q1/4Q4.72"K	1.250"	1.73"	2.09"	4.72"	3.35"	2.44"	0.39"	M16x1
CAT50QSF1/4Q6.30"K	0.250"	0.83"	1.26"	6.30"	4.92"	1.42"	0.39"	M5
CAT50QSF3/8Q6.30"K	0.375"	0.94"	1.34"	6.30"	4.92"	1.65"	0.39"	M8x1
CAT50QSF1/2Q6.30"K	0.500"	1.06"	1.65"	6.30"	4.92"	1.85"	0.39"	M10x1
CAT50QSF5/8Q6.30"K	0.625"	1.06"	1.65"	6.30"	4.92"	1.97"	0.39"	M12x1
CAT50QSF3/4Q6.30"K	0.750"	1.30"	2.01"	6.30"	4.92"	2.05"	0.39"	M16x1
CAT50QSF1Q6.30"K	1.000"	1.73"	2.36"	6.30"	4.92"	2.44"	0.39"	M16x1
CAT50QSF1Q1/4Q6.30"	1.250"	1.73"	2.36"	6.30"	4.92"	2.44"	0.39"	M16x1

HSK Shrink Fit Chuck, 4.5°, Coolant

A ↗	RPM	
≤0.003	G2.5/25000	AD

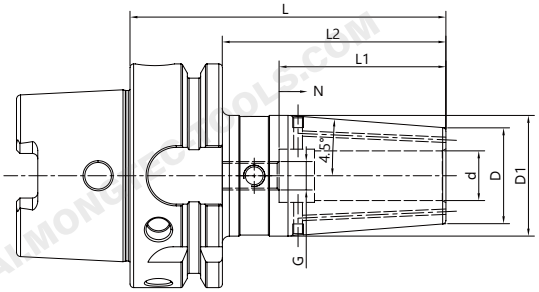

Size	d	D	D1	L	L2	L1	N	G
HSK63AQSF03Q80K	3	15	20	80	54	-	-	-
HSK63AQSF04Q80K	4	15	20	80	54	-	-	-
HSK63AQSF05Q80K	5	15	20	80	54	-	-	-
HSK63AQSF06Q80K	6	21	26.5	80	54	36	10	M5
HSK63AQSF08Q80K	8	21	26.5	80	54	36	10	M6
HSK63AQSF10Q85K	10	24	30.5	85	59	42	10	M8x1
HSK63AQSF12Q90K	12	24	31	90	64	47	10	M10x1
HSK63AQSF14Q90K	14	27	34	90	64	47	10	M10x1
HSK63AQSF16Q95K	16	27	34	95	69	50	10	M12x1
HSK63AQSF18Q95K	18	33	41	95	69	50	10	M12x1
HSK63AQSF20Q100K	20	33	42	100	74	52	10	M16x1
HSK63AQSF25Q115K	25	44	52.5	115	89	58	10	M16x1
HSK63AQSF32Q120K	32	44	52.5	120	94	62	10	M16x1
HSK63AQSF03Q120K	3	15	20	120	94	-	-	-
HSK63AQSF04Q120K	4	15	20	120	94	-	-	-
HSK63AQSF05Q120K	5	15	20	120	94	-	-	-
HSK63AQSF06Q120K	6	21	27	120	94	36	10	M5
HSK63AQSF08Q120K	8	21	27	120	94	36	10	M6
HSK63AQSF10Q120K	10	24	32	120	94	42	10	M8x1
HSK63AQSF12Q120K	12	24	32	120	94	47	10	M10x1
HSK63AQSF14Q120K	14	27	34	120	94	47	10	M10x1
HSK63AQSF16Q120K	16	27	34	120	94	50	10	M12x1
HSK63AQSF18Q120K	18	33	42	120	94	50	10	M12x1
HSK63AQSF20Q120K	20	33	42	120	94	52	10	M16x1
HSK63AQSF25Q120K	25	44	52.5	120	94	58	10	M16x1

HSK Shrink Fit Chuck, 4.5°, Coolant

A ↗	RPM	
≤0.003	G2.5/25000	AD

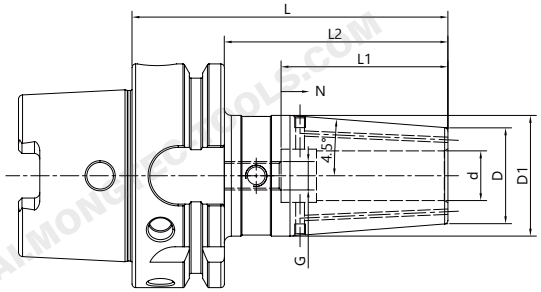

Size	d	D	D1	L	L2	L1	N	G
HSK63AQSF03Q160K	3	15	25	160	134	-	-	-
HSK63AQSF04Q160K	4	15	25	160	134	-	-	-
HSK63AQSF05Q160K	5	15	25	160	134	-	-	-
HSK63AQSF06Q160K	6	21	32	160	134	36	10	M5
HSK63AQSF08Q160K	8	21	32	160	134	36	10	M6
HSK63AQSF10Q160K	10	24	34	160	134	42	10	M8x1
HSK63AQSF12Q160K	12	24	34	160	134	47	10	M10x1
HSK63AQSF14Q160K	14	27	42	160	134	47	10	M10x1
HSK63AQSF16Q160K	16	27	42	160	134	50	10	M12x1
HSK63AQSF18Q160K	18	33	51	160	134	50	10	M12x1
HSK63AQSF20Q160K	20	33	51	160	134	52	10	M16x1
HSK63AQSF25Q160K	25	44	52.5	160	134	58	10	M16x1
HSK63AQSF32Q160K	32	44	52.5	160	134	62	10	M16x1
HSK100AQSF06Q85K	6	21	26.5	85	56	36	10	M5
HSK100AQSF08Q85K	8	21	26.5	85	56	36	10	M6
HSK100AQSF10Q90K	10	24	30.5	90	61	42	10	M8x1
HSK100AQSF12Q95K	12	24	31	95	66	47	10	M10x1
HSK100AQSF14Q95K	14	27	34	95	66	47	10	M10x1
HSK100AQSF16Q100K	16	27	34	100	71	50	10	M12x1
HSK100AQSF18Q100K	18	33	42	100	71	50	10	M12x1
HSK100AQSF20Q105K	20	33	42	105	76	52	10	M16x1
HSK100AQSF25Q115K	25	44	53	115	86	58	10	M16x1
HSK100AQSF32Q120K	32	44	53	120	91	62	10	M16x1

HSK Shrink Fit Chuck, 4.5°, Coolant

A ↗	RPM	
≤0.003	G2.5/25000	AD

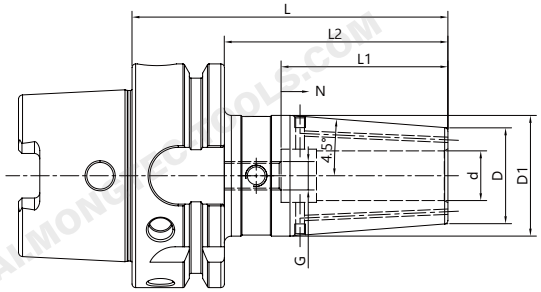

Size	d	D	D1	L	L2	L1	N	G
HSK100AQSF06Q120K	6	21	27	120	91	36	10	M5
HSK100AQSF08Q120K	8	21	27	120	91	36	10	M6
HSK100AQSF10Q120K	10	24	32	120	91	42	10	M8x1
HSK100AQSF12Q120K	12	24	32	120	91	47	10	M10x1
HSK100AQSF14Q120K	14	27	34	120	91	47	10	M10x1
HSK100AQSF16Q120K	16	27	34	120	91	50	10	M12x1
HSK100AQSF18Q120K	18	33	42	120	91	50	10	M12x1
HSK100AQSF20Q120K	20	33	42	120	91	52	10	M16x1
HSK100AQSF25Q120K	25	44	53	120	91	58	10	M16x1
HSK100AQSF06Q160K	6	21	32	160	131	36	10	M5
HSK100AQSF08Q160K	8	21	32	160	131	36	10	M6
HSK100AQSF10Q160K	10	24	34	160	131	42	10	M8x1
HSK100AQSF12Q160K	12	24	34	160	131	47	10	M10x1
HSK100AQSF14Q160K	14	27	42	160	131	47	10	M10x1
HSK100AQSF16Q160K	16	27	42	160	131	50	10	M12x1
HSK100AQSF18Q160K	18	33	51	160	131	50	10	M12x1
HSK100AQSF20Q160K	20	33	51	160	131	52	10	M16x1
HSK100AQSF25Q160K	25	44	60	160	131	58	10	M16x1
HSK100AQSF32Q160K	32	44	60	160	131	62	10	M16x1

BT Shrink Fit Chuck, Slim, 3°

A ↗	RPM	
≤0.003	G2.5/25000	AD

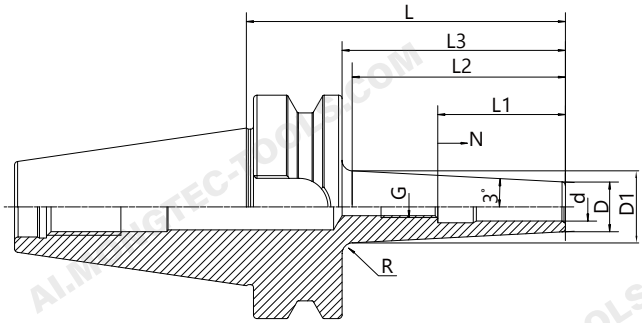

Size	d	D	D1	L	L3	L2	L1	N	G	R
BT30QSFS03Q80	3	9	14.8	80	58	55.2	-	-	-	3
BT30QSFS04Q80	4	10	15.8	80	58	55.2	-	-	-	3
BT30QSFS06Q80	6	12	17.8	80	58	55.2	36	10	M5	3
BT30QSFS08Q80	8	14	19.8	80	58	55.2	36	10	M6	3
BT30QSFS10Q80	10	16	21.8	80	58	55.2	42	10	M8x1	3
BT30QSFS12Q80	12	18	23.8	80	58	55.2	47	10	M10x1	3
BT30QSFS16Q80	16	22	27.8	80	58	55.2	50	10	M12x1	3
BT30QSFS06Q120	6	12	21.5	120	98	90.6	36	10	M5	3
BT30QSFS08Q120	8	14	23.5	120	98	90.6	36	10	M6	3
BT30QSFS10Q120	10	16	25.5	120	98	90.6	42	10	M8x1	3
BT30QSFS12Q120	12	18	27.5	120	98	90.6	47	10	M10x1	3
BT30QSFS16Q120	16	22	31.5	120	98	90.6	50	10	M12x1	3
BT40QSFS03-90	3	9	15.3	90	63	60.2	-	-	-	3
BT40QSFS04Q90	4	10	16.3	90	63	60.2	-	-	-	3
BT40QSFS06Q90	6	12	18.3	90	63	60.2	36	10	M5	3
BT40QSFS08Q90	8	14	20.3	90	63	60.2	36	10	M6	3
BT40QSFS10Q90	10	16	22.3	90	63	60.2	42	10	M8x1	3
BT40QSFS12Q90	12	18	24.3	90	63	60.2	47	10	M10x1	3
BT40QSFS16Q90	16	22	28.3	90	63	60.2	50	10	M12x1	3
BT40QSFS03Q120	3	9	18.3	120	93	88.3	-	-	-	5
BT40QSFS04Q120	4	10	19.3	120	93	88.3	-	-	-	5
BT40QSFS06Q120	6	12	21.3	120	93	88.3	36	10	M5	5
BT40QSFS08Q120	8	14	23.3	120	93	88.3	36	10	M6	5
BT40QSFS10Q120	10	16	25.3	120	93	88.3	42	10	M8x1	5
BT40QSFS12Q120	12	18	27.3	120	93	88.3	47	10	M10x1	5
BT40QSFS16Q120	16	22	31.3	120	93	88.3	50	10	M12x1	5
BT40QSFS03Q160	3	9	22.4	160	133	128.3	-	-	-	5
BT40QSFS04Q160	4	10	23.4	160	133	128.3	-	-	-	5
BT40QSFS06Q160	6	12	25.4	160	133	128.3	36	10	M5	5
BT40QSFS08Q160	8	14	27.4	160	133	128.3	36	10	M6	5
BT40QSFS10Q160	10	16	29.4	160	133	128.3	42	10	M8x1	5
BT40QSFS12Q160	12	18	31.4	160	133	128.3	47	10	M10x1	5
BT40QSFS16Q160	16	22	35.4	160	133	128.3	50	10	M12x1	5
BT40QSFS20Q160	20	27	40.4	160	133	128.3	52	10	M16x1	5

SK Shrink Fit Chuck, Slim, 3°

A ↗	RPM	AD
≤0.003	G2.5/25000	

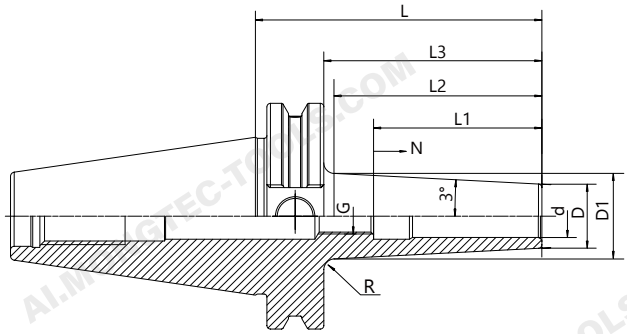

Size	d	D	D1	L	L3	L2	L1	N	G	R
SK40QSFS03Q80	3	9	16.1	80	70.9	68.1	-	-	-	3
SK40QSFS04Q80	4	10	17.1	80	70.9	68.1	-	-	-	3
SK40QSFS06Q80	6	12	19.1	80	70.9	68.1	36	10	M5	3
SK40QSFS08Q80	8	14	21.1	80	70.9	68.1	36	10	M6	3
SK40QSFS10Q80	10	16	23.1	80	70.9	68.1	42	10	M8x1	3
SK40QSFS12Q80	12	18	25.1	80	70.9	68.1	47	10	M10x1	3
SK40QSFS16Q80	16	22	29.1	80	70.9	68.1	50	10	M12x1	3
SK40QSFS03Q120	3	9	19.1	120	100.9	96.1	-	-	-	5
SK40QSFS04Q120	4	10	20.1	120	100.9	96.1	-	-	-	5
SK40QSFS06Q120	6	12	22.1	120	100.9	96.1	36	10	M5	5
SK40QSFS08Q120	8	14	24.1	120	100.9	96.1	36	10	M6	5
SK40QSFS10Q120	10	16	26.1	120	100.9	96.1	42	10	M8x1	5
SK40QSFS12Q120	12	18	28.1	120	100.9	96.1	47	10	M10x1	5
SK40QSFS16Q120	16	22	32.1	120	100.9	96.1	50	10	M12x1	5
SK40QSFS03Q160	3	9	23.3	160	140.9	136.2	-	-	-	5
SK40QSFS04Q160	4	10	24.3	160	140.9	136.2	-	-	-	5
SK40QSFS06Q160	6	12	26.3	160	140.9	136.2	36	10	M5	5
SK40QSFS08Q160	8	14	28.3	160	140.9	136.2	36	10	M6	5
SK40QSFS10Q160	10	16	30.3	160	140.9	136.2	42	10	M8x1	5
SK40QSFS12Q160	12	18	32.3	160	140.9	136.2	47	10	M10x1	5
SK40QSFS16Q160	16	22	36.3	160	140.9	136.2	50	10	M12x1	5

CAT Shrink Fit Chuck, Slim, 3°

A ↗	RPM	
≤0.003	G2.5/25000	AD

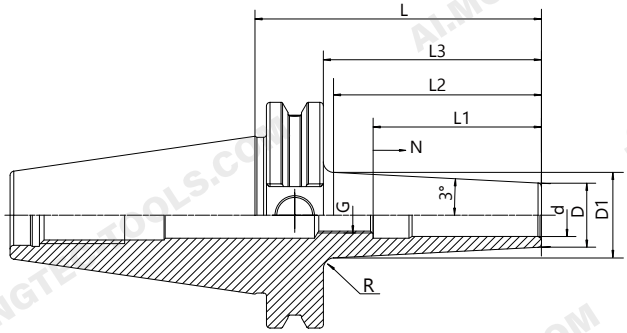

Size	d	D	D1	L	L1	G
CAT40QSFS03Q80	3	9	15.5	80	45	M6.0P
CAT40QSFS04Q80	4	10	16.3	80	45	M6.0P
CAT40QSFS06Q80	6	12	18.3	80	45	M5x0.8P
CAT40QSFS1/8"-3.15"	1/8"	0.35"	0.60"	3.15"	0.78"	M6.0P
CAT40QSFS3/16"-3.15"	3/16"	0.43"	0.68"	3.15"	0.78"	M6.0P
CAT40QSFS1/4"-3.15"	1/4"	0.47"	0.72"	3.15"	1.42"	M5x0.8P
CAT40QSFS3/8"-3.15"	3/8"	0.63"	0.88"	3.15"	1.93"	M8x1.25P
CAT40QSFS1/2"-3.15"	1/2"	0.70"	0.96"	3.15"	1.93"	M10x1.5P

HSK Shrink Fit Chuck, Slim, 3°

A ↗	RPM	
≤0.003	G2.5/25000	AD

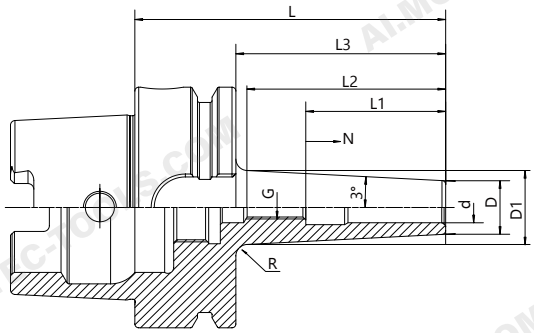

Size	d	D	D1	L	L3	L2	L1	N	G	R
HSK50AQSFS03Q80	3	9	14.4	80	54	51.2	-	-	-	3
HSK50AQSFS04Q80	4	10	15.4	80	54	51.2	-	-	-	3
HSK50AQSFS06Q80	6	12	17.4	80	54	51.2	36	10	M5	3
HSK50AQSFS08Q80	8	14	19.4	80	54	51.2	36	10	M6	3
HSK50AQSFS10Q85	10	16	21.9	85	59	56.2	42	10	M8x1	3
HSK50AQSFS12Q90	12	18	24.4	90	64	61.2	47	10	M10x1	3
HSK50AQSFS16Q95	16	22	28.9	95	69	66.2	50	10	M12x1	3
HSK63AQSFS03Q80	3	9	14	80	54	47.7	-	-	-	4
HSK63AQSFS04Q80	4	10	15.4	80	54	51.2	-	-	-	3
HSK63AQSFS06Q80	6	12	17.4	80	54	51.2	36	10	M5	3
HSK63AQSFS08Q80	8	14	19.4	80	54	51.2	36	10	M6	3
HSK63AQSFS10Q85	10	16	21.8	85	59	56.2	42	10	M8x1	3
HSK63AQSFS12Q90	12	18	24.4	90	64	61.2	47	10	M10x1	3
HSK63AQSFS16Q95	16	22	28.7	95	69	64.3	50	10	M12x1	5
HSK63AQSFS03Q120	3	9	18.4	120	94	89.3	-	-	-	5
HSK63AQSFS04Q120	4	10	19.4	120	94	89.3	-	-	-	5
HSK63AQSFS06Q120	6	12	21.4	120	94	89.3	36	10	M5	5
HSK63AQSFS08Q120	8	14	23.4	120	94	89.3	36	10	M6	5
HSK63AQSFS10Q120	10	16	25.4	120	94	89.3	42	10	M8x1	5
HSK63AQSFS12Q120	12	18	27.4	120	94	89.3	47	10	M10x1	5
HSK63AQSFS16Q120	16	22	31.4	120	94	89.3	50	10	M12x1	5
HSK63AQSFS03Q160	3	9	22.5	160	134	129.3	-	-	-	5
HSK63AQSFS04Q160	4	10	23.5	160	134	129.3	-	-	-	5
HSK63AQSFS06Q160	6	12	25.5	160	134	129.3	36	10	M5	5
HSK63AQSFS08Q160	8	14	27.5	160	134	129.3	36	10	M6	5
HSK63AQSFS10Q160	10	16	29.5	160	134	129.3	42	10	M8x1	5
HSK63AQSFS12Q160	12	18	31.5	160	134	129.3	47	10	M10x1	5
HSK63AQSFS16Q160	16	22	35.5	160	134	129.3	50	10	M12x1	5

HSK Shrink Fit Chuck, Slim, 3°

A ↗	RPM	
≤0.003	G2.5/25000	AD

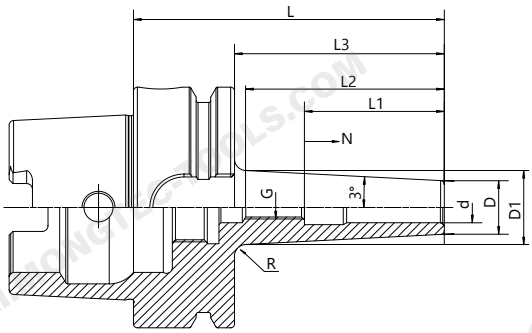

Size	d	D	L	L3	L1	N	G
HSK63AQSFS1/8Q3.15"	0.125"	0.59"	3.15"	2.13"	-	-	-
HSK63AQSFS3/16Q3.15"	0.187"	0.59"	3.15"	2.13"	-	-	-
HSK63AQSFS1/4Q3.15"	0.250"	0.83"	3.15"	2.13"	1.42"	0.39"	M5
HSK63AQSFS5/16Q3.15"	0.312"	0.83"	3.15"	2.13"	1.42"	0.39"	M6
HSK63AQSFS3/8Q3.35"	0.375"	0.94"	3.35"	2.32"	1.65"	0.39"	M8x1
HSK63AQSFS1/2Q3.54"	0.500"	1.06"	3.54"	2.52"	1.85"	0.39"	M10x1

HSK Shrink Fit Chuck, Slim, 3°

A ↗	RPM	
≤0.003	G2.5/25000	AD

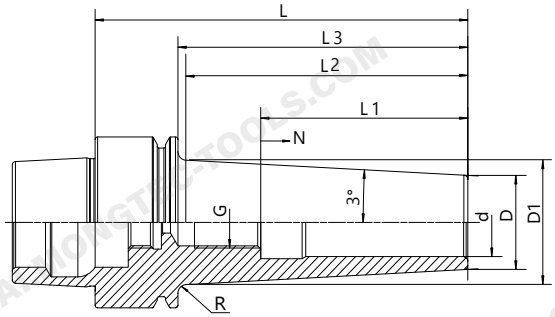

Size	d	D	D1	L	L3	L2	L1	N	G	R
HSK25EQSFS03Q50	3	9	–	50	33	–	23	8	M6	–
HSK25EQSFS04Q50	4	10	–	50	33	–	20	4	M6	–
HSK25EQSFS05Q50	5	11	–	50	33	–	20	3	M6	–
HSK25EQSFS06Q50	6	12	–	50	33	–	36	–	–	–
HSK25EQSFS08Q50	8	14	–	50	38	–	36	–	–	–
HSK25EQSFS10Q50	10	16	–	50	40	–	42	–	–	–
HSK32EQSFS03Q60	3	9	13.3	60	44	41.2	20	5	M6	3
HSK32EQSFS04Q60	4	10	14.3	60	44	41.2	20	5	M6	3
HSK32EQSFS06Q70	6	12	17.4	70	54	51.2	36	5	M5	3
HSK32EQSFS08Q70	8	14	19.36	70	54	51.2	36	5	M6	3
HSK32EQSFS10Q80	10	16	22.4	80	64	61.2	42	5	M8x1	3
HSK40EQSFS03Q50	3	9	11.9	50	30	27.2	20	–	–	3
HSK40EQSFS04Q50	4	10	12.9	50	30	27.2	20	–	–	3
HSK40EQSFS06Q60	6	12	15.9	60	40	37.2	36	10	M5	3
HSK40EQSFS08Q60	8	14	17.9	60	40	37.2	36	10	–	3
HSK40EQSFS10Q60	10	16	19.9	60	40	37.2	42	10	–	3
HSK40EQSFS12Q60	12	18	21.9	60	40	37.2	42	10	–	3
HSK40EQSFS16Q70	16	22	27	70	50	48.1	50	10	–	2
HSK50EQSFS03Q60	3	9	12.3	60	34	31.2	20	–	–	3
HSK50EQSFS04Q80	4	10	15.4	80	54	51.2	20	–	–	3
HSK50EQSFS06Q80	6	12	17.4	80	54	51.2	36	10	M5	3
HSK50EQSFS08Q80	8	14	19.4	80	54	51.2	36	10	M6	3
HSK50EQSFS10Q90	10	16	22.4	90	64	61.2	42	10	M8x1	3
HSK50EQSFS12Q90	12	18	24.4	90	64	61.2	47	10	M10x1	3
HSK50EQSFS16Q90	16	22	28.4	90	64	61.2	50	10	M16x1	3

HSK Shrink Fit Chuck, Slim, 3°

A ↗	RPM	
≤0.003	G2.5/25000	AD

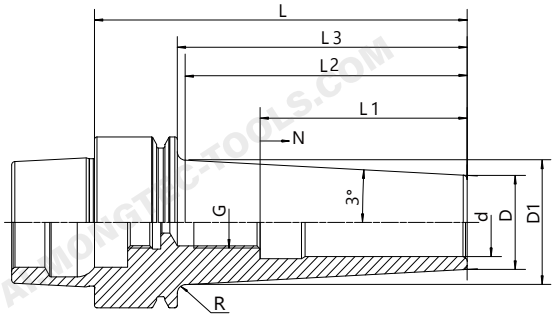

Size	d	D	D1	L	L3	L1	N	G
HSK40EQSFS1/8Q2.36"	1/8"	0.36"	0.63"	2.36"	1.57"	0.78"	–	M6 x 1.0
HSK40EQSFS3/16Q2.36"	3/16"	0.43"	0.69"	2.36"	1.57"	0.78"	–	M6 x 1.0
HSK40EQSFS1/4Q2.36"	1/4"	0.47"	0.81"	2.36"	1.57"	1.42"	0.39"	M5 x 0.8
HSK40EQSFS3/8Q2.36"	3/8"	0.63"	0.94"	2.36"	1.57"	1.65"	0.39"	M8 x 1.25
HSK40EQSFS1/2Q2.36"	1/2"	0.71"	1.06"	2.36"	1.57"	1.85"	0.39"	M10 x 1.5
HSK50EQSFS1/8Q2.76	0.125	0.39	0.55	2.76	1.65	0.79	–	M6
HSK50EQSFS3/16Q2.76	0.187	0.39	0.55	2.76	1.65	0.98	–	M6
HSK50EQSFS1/4Q2.76	0.25	0.47	0.63	2.76	1.65	1.42	0.39"	M5
HSK50EQSFS3/8Q2.76	0.375	0.63	0.79	2.76	1.65	1.65	0.39"	–
HSK50EQSFS1/2Q2.76	0.5	0.71	0.87	2.76	1.65	1.85	0.39"	–
HSK50EQSFS5/8Q2.76	0.625	0.87	1.02	2.76	1.65	1.85	0.39"	M5
HSK50EQSFS1/4Q3.54	0.25	0.47	0.71	3.54	2.36	1.42	0.39"	M8x1
HSK50EQSFS3/8Q3.54	0.375	0.63	0.87	3.54	2.36	1.65	0.39"	M10x1
HSK50EQSFS1/2Q3.54	0.5	0.79	1.02	3.54	2.36	1.85	0.39"	M10x1
HSK50EQSFS5/8Q3.54	0.625	0.87	1.1	3.54	2.36	1.97	0.39"	M6
HSK50EQSFS1/8Q3.94	0.125	0.39	0.67	3.94	2.76	0.79	–	M6
HSK50EQSFS3/16Q3.94	0.187	0.43	0.71	3.94	2.76	0.98	–	M5
HSK50EQSFS1/4Q4.72	0.25	0.47	0.83	4.72	3.54	1.42	0.39"	M8x1
HSK50EQSFS3/8Q4.72	0.375	0.63	0.98	4.72	3.54	1.65	0.39"	M10x1
HSK50EQSFS1/2Q4.72	0.5	0.79	1.14	4.72	3.54	1.85	0.39"	M10x1
HSK50EQSFS5/8Q4.72	0.625	0.87	1.22	4.72	3.54	1.97	0.39"	

CShrink Fit Extension, 3°

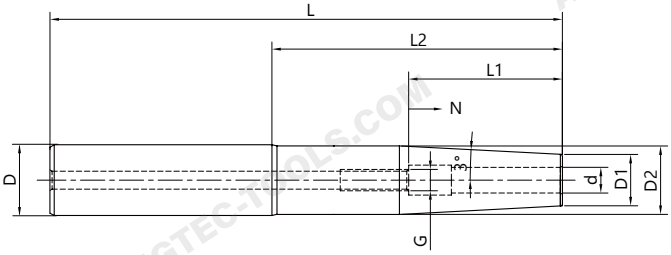

Size	d	D1	D2	D	L	L1	L2	N	G	
C12QSFS03Q120	3	9	11.8	12	120	-	73	-	-	1
C12QSFS04Q120	4	10	11.8	12	120	-	73	-	-	1
C12QSFS05Q120	5	11	11.8	12	120	-	73	-	-	1
C12QSFS06Q120	6	12	17	12	120	36	73	10	M5	3
C12QSFS08Q120	8	14	19	12	120	36	73	10	M6	3
C16QSFS03Q120	3	9	13	16	120	-	70	-	-	1
C16QSFS04Q120	4	10	14	16	120	-	70	-	-	1
C16QSFS05Q120	5	11	15	16	120	-	70	-	-	1
C16QSFS06Q120	6	12	15.8	16	120	36	70	10	M5	2
C16QSFS08Q120	8	14	19	16	120	36	70	10	M6	3
C20QSFS03Q120	3	9	13	20	120	-	68	-	-	1
C20QSFS04Q120	4	10	14	20	120	-	68	-	-	1
C20QSFS05Q120	5	11	15	20	120	-	68	-	-	1
C20QSFS06Q120	6	12	16	20	120	36	68	10	M5	1
C20QSFS08Q120	8	14	19	20	120	36	68	10	M6	1
C20QSFS10Q120	10	16	19.8	20	120	42	68	10	M8x1	1
C20QSFS12Q120	12	18	19.8	20	120	47	68	10	M10x1	1
C12QSFS03Q160	3	9	11.8	12	160	-	113	-	-	1
C12QSFS04Q160	4	10	11.8	12	160	-	113	-	-	1
C16QSFS03Q160	3	9	13	16	160	-	110	-	-	1
C16QSFS04Q160	4	10	14	16	160	-	110	-	-	1
C16QSFS05Q160	5	11	15	16	160	-	110	-	-	1
C20QSFS05Q160	5	11	15	20	160	-	110	-	-	1
C20QSFS06Q160	6	12	16	20	160	36	108	10	M5	1
C20QSFS08Q160	8	14	19	20	160	36	108	10	M6	1
C25QSFS08Q160	8	14	19	25	160	36	108	10	M6	1
C25QSFS10Q160	10	16	21	25	160	42	108	10	M8x1	1
C25QSFS12Q160	12	18	23	25	160	47	108	10	M10x1	1
C25QSFS14Q160	14	20	24.8	25	160	47	108	10	M10x1	1
C25QSFS16Q160	16	22	24.8	25	160	50	108	10	M12x1	1
C32QSFS10Q160	10	16	21	32	160	42	98	10	M8x1	1
C32QSFS12Q160	12	18	23	32	160	47	98	10	M10x1	1

CShrink Fit Extension, 3°

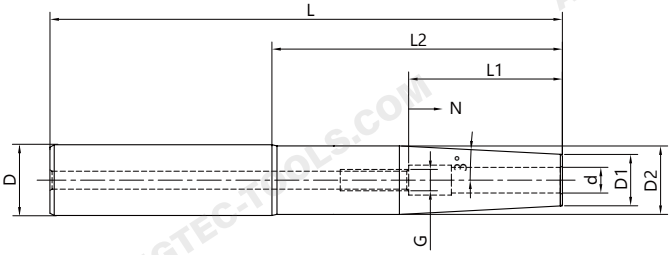

Size	d	D1	D2	D	L	L1	L2	N	G
C32QSFS14Q160	14	20	25	32	160	47	98	10	M10x1
C32QSFS16Q160	16	22	28	32	160	50	98	10	M12x1
C32QSFS18Q160	18	25	30	32	160	50	98	10	M12x1
C32QSFS20Q160	20	26	31.8	32	160	52	98	10	M16x1
C16QSFS03Q200	3	9	13	16	200	-	150	-	-
C16QSFS04Q200	4	10	14	16	200	-	150	-	-
C16QSFS05Q200	5	11	15	16	200	-	150	-	-
C16QSFS06Q200	6	12	15.8	16	200	36	150	10	M5
C16QSFS08Q200	8	14	19	16	200	36	150	10	M6
C20QSFS04Q200	4	10	14	20	200	-	148	-	-
C20QSFS06Q200	6	12	16	20	200	36	148	10	M5
C20QSFS08Q200	8	14	19	20	200	36	148	10	M6
C20QSFS10Q200	10	16	19.8	20	200	42	148	10	M8x1
C20QSFS06Q250	6	12	16	20	250	36	198	10	M5
C20QSFS08Q250	8	14	19	20	250	36	198	10	M6
C20QSFS10Q250	10	16	19.8	20	250	42	198	10	M8x1
C25QSFS12Q250	12	18	23	25	250	47	192	10	M10x1
C25QSFS16Q250	16	22	28	25	250	50	192	10	M12x1

CShrink Fit Extension, 3°

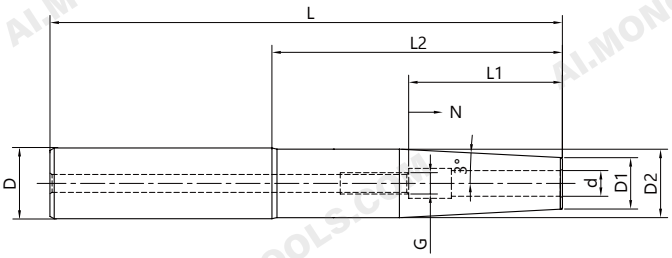

Size	d	D1	D2	D	L	L1	L2	N	G
C1/2Q1/8Q4.33	1/8	0.39	1/2	1/2	4.33	0.79	2.48	0.2	M6
C3/4Q1/8Q4.33	1/8	0.39	3/4	3/4	4.33	0.98	2.28	0.2	M6
C1/2Q1/4Q4.33	1/4	0.47	1/2	1/2	4.33	1.42	2.48	0.39	M5
C3/4Q1/4Q4.33	1/4	0.47	3/4	3/4	4.33	1.42	2.28	0.39	M5
C3/4Q3/8Q4.33	3/8	0.63	3/4	3/4	4.33	1.65	2.28	0.39	M8*1
C3/4Q1/8Q9.84	1/8	0.39	3/4	3/4	9.84	0.79	7.79	0.2	M6
C3/4Q1/4Q9.84	1/4	0.47	3/4	3/4	9.84	1.42	7.79	0.39	M5
C3/4Q3/8Q9.84	3/8	0.63	3/4	3/4	9.84	1.65	7.79	0.39	M8*1
C3/4Q1/2Q9.84	1/2	0.79	1	3/4	9.84	1.85	7.59	0.39	M10*1
C1Q1/2Q9.84	1/2	0.87	1	1	9.84	1.85	7.59	0.39	M10*1
C1Q5/8Q9.84	5/8	0.87	1	1	9.84	1.97	7.59	0.39	M12*1

Module Shrink Chuck

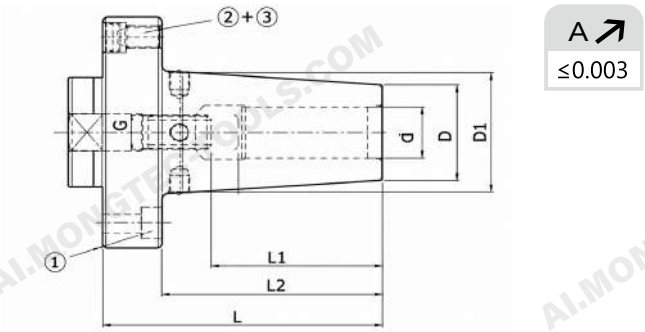

Size	d	D	D1	L	L2	L1	N	G
MOD60QSF06Q70	6	6	27	70	57	36	10	M5
MOD60QSF08Q70	8	8	27	70	57	36	10	M6
MOD60QSF10Q70	10	10	32	70	57	41	10	M8x1
MOD60QSF12Q70	12	12	32	70	57	46	10	M10x1
MOD70QSF14Q75	14	14	34	75	60	46	10	M10x1
MOD70QSF16Q75	16	16	34	75	60	49	10	M12x1
MOD80QSF18Q80	18	18	42	80	63	49	10	M12x1
MOD80QSF20Q80	20	20	42	80	63	51	10	M16x1
MOD100QSF25Q80	25	25	53	80	59	57	10	M16x1
MOD100QSF32Q80	32	32	53	80	59	61	10	M16x1

Shrink Fit ER Collet

Size	Collet Size	d	D1	D2	L
ER16QSF03	ER16	3	16	6.7	27.5
ER16QSF04	ER16	4	16	6.7	27.5
ER16QSF05	ER16	5	16	6.7	27.5
ER16QSF06	ER16	6	16	6.7	27.5
ER16QSF08	ER16	8	16	6.7	27.5
ER16QSF10	ER16	10	16	6.7	27.5
ER20QSF03	ER20	3	20	7.52	31.5
ER20QSF04	ER20	4	20	7.52	31.5
ER20QSF05	ER20	5	20	7.52	31.5
ER20QSF06	ER20	6	20	7.52	31.5
ER20QSF08	ER20	8	20	7.52	31.5
ER20QSF10	ER20	10	20	7.52	31.5
ER20QSF12	ER20	12	20	7.52	31.5
ER25QSF03	ER25	3	25	8	34
ER25QSF04	ER25	4	25	8	34
ER25QSF05	ER25	5	25	8	34
ER25QSF06	ER25	6	25	8	34
ER25QSF08	ER25	8	25	8	34
ER25QSF10	ER25	10	25	8	34
ER25QSF12	ER25	12	25	8	34
ER25QSF14	ER25	14	25	8	34
ER25QSF16	ER25	16	25	8	34
ER32QSF03	ER32	3	32	9	40
ER32QSF04	ER32	4	32	9	40
ER32QSF05	ER32	5	32	9	40
ER32QSF06	ER32	6	32	9	40
ER32QSF08	ER32	8	32	9	40
ER32QSF10	ER32	10	32	9	40
ER32QSF12	ER32	12	32	9	40
ER32QSF14	ER32	14	32	9	40
ER32QSF16	ER32	16	32	9	40
ER32QSF18	ER32	18	32	9	40
ER32QSF20	ER32	20	32	9	40

Shrink Fit ER Collet Extension

Size	Collet Size	d	D1	L	L1
ER16QSFS03Q35	ER16	3	16	41.7	35
ER16QSFS04Q35	ER16	4	16	41.7	35
ER16QSFS05Q35	ER16	5	16	41.7	35
ER16QSFS06Q35	ER16	6	16	41.7	35
ER20QSFS03Q35	ER20	3	20	42.52	35
ER20QSFS04Q35	ER20	4	20	42.52	35
ER20QSFS05Q35	ER20	5	20	42.52	35
ER20QSFS06Q35	ER20	6	20	42.52	35
ER20QSFS08Q35	ER20	8	20	42.52	35
ER25QSFS03Q35	ER25	3	25	43	35
ER25QSFS04Q35	ER25	4	25	43	35
ER25QSFS05Q35	ER25	5	25	43	35
ER25QSFS06Q35	ER25	6	25	43	35
ER25QSFS08Q35	ER25	8	25	43	35
ER25QSFS10Q35	ER25	10	25	43	35
ER32QSFS03Q35	ER32	3	32	44	35
ER32QSFS04Q35	ER32	4	32	44	35
ER32QSFS05Q35	ER32	5	32	44	35
ER32QSFS06Q35	ER32	6	32	44	35
ER32QSFS08Q35	ER32	8	32	44	35
ER32QSFS10Q35	ER32	10	32	44	35
ER32QSFS12Q35	ER32	12	32	44	35
ER32QSFS14Q35	ER32	14	32	44	35
ER32QSFS16Q35	ER32	16	32	44	35

Shrink Chuck Set

A ↗	RPM	AD
≤0.003	G2.5/25000	

Size	Tool Holder Size	d	D1
BT40QSF16Q90Q4 pcs	BT40QSF16Q90	C16QSFS03/04/06/08Q160	4
BT40QSF16Q90Q4 pcs	BT40QSF16Q90	C16QSFS03/04/06/08Q160	4
BT40QSF20Q90Q6 pcs	BT40QSF20Q90	C20QSFS03/04/06/08/10/12Q160	6
SK40QSF16Q90Q4 pcs	SK40QSF16Q90	C12QSFS03/04/06/08Q160	4
SK40QSF16Q90Q4 pcs	SK40QSF16Q90	C16QSFS03/04/06/08Q160	4
SK40QSF20Q90Q6 pcs	SK40QSF20Q90	C20QSFS03/04/06/08/10/12Q160	6
HSK63AQSF16Q90Q4 pcs	HSK63AQSF16Q90	C12QSFS03/04/06/08Q160	4
HSK63AQSF16Q90Q4 pcs	HSK63AQSF16Q90	C16QSFS03/04/06/08Q160	4
HSK63AQSF20Q90Q6 pcs	HSK63AQSF20Q90	C20QSFS03/04/06/08/10/12Q160	6

BT Shrink Chuck Taper

A ↗	RPM	AD
≤0.003	G2.5/25000	

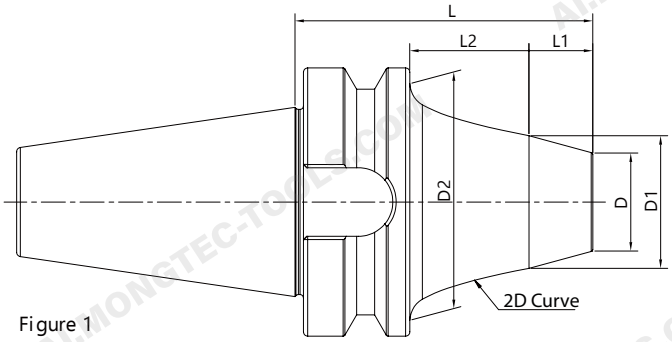

Figure 1

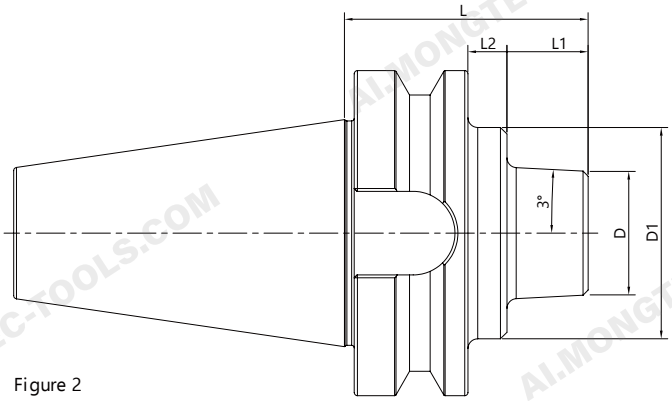

Figure 2

Size	D	D1	D2	L	L1	L2	Figure
BT30QTSF06Q35	19	-	34	35	13	-	1
BT30QTSF08Q35	23	-	34	35	13	-	1
BT30QTSF12Q35	38	-	-	35	13	-	2
BT40QTSF08Q40	23	-	53	40	13	-	1
BT40QTSF12Q45	38	-	-	45	18	-	2
BT40QTSF12Q75	38	-	-	75	48	-	2
BT40QTSF12Q135	41	-	-	135	108	-	2
BT50QTSF12Q75	38	65	-	75	25	12	2
BT50QTSF12Q105	41	66	-	105	55	12	2
BT50QTSF12Q135	41	67	-	135	85	12	2

SK Shrink Chuck Taper

A ↗	RPM	AD
≤0.003	G2.5/25000	

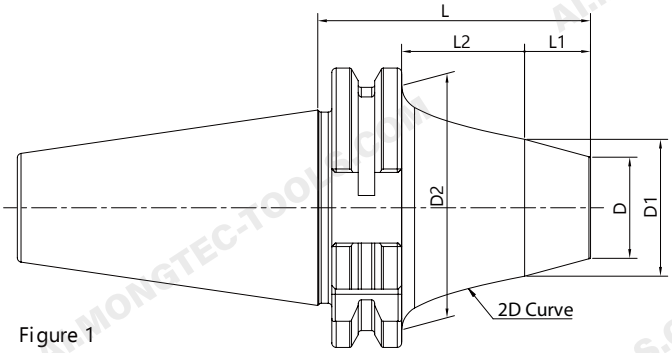

Figure 1

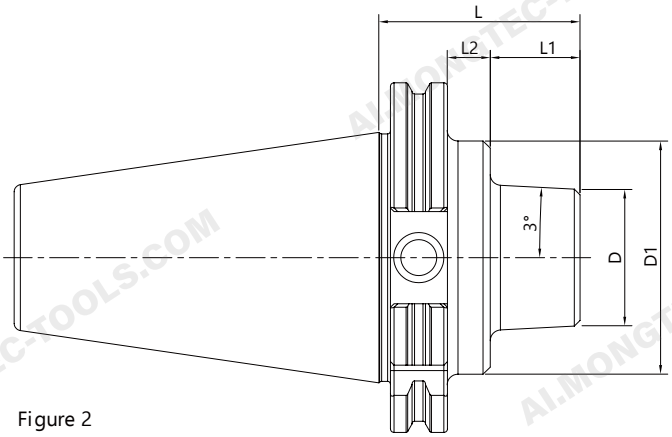

Figure 2

Size	D	D1	D2	L	L1	L2	Figure
SK30QTSF06Q35	19	-	34	35	13	-	1
SK30QTSF08Q35	23	27.5	34	35	13	-	1
SK30QTSF12Q35	38	-	-	35	13	-	2
SK40QTSF08Q40	23	31.2	50	40	13	-	1
SK40QTSF12Q45	38	-	-	45	18	-	2
SK40QTSF12Q75	38	-	-	75	48	-	2
SK40QTSF12Q135	38	-	-	135	108	-	-
SK50QTSF12Q75	38	65	-	75	25	12	2
SK50QTSF12Q105	38	65	-	105	55	12	2
SK50QTSF12Q135	38	65	-	135	85	12	2

HSK Shrink Chuck Taper

A ↗	RPM	
≤0.003	G2.5/25000	AD

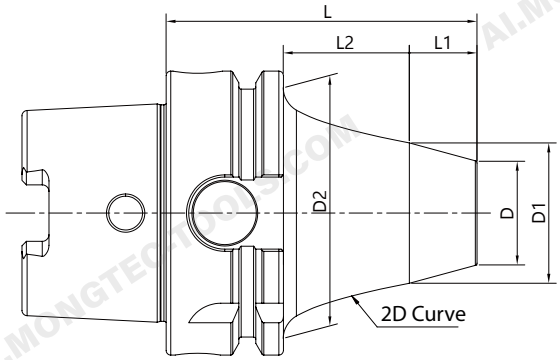

Figure 1

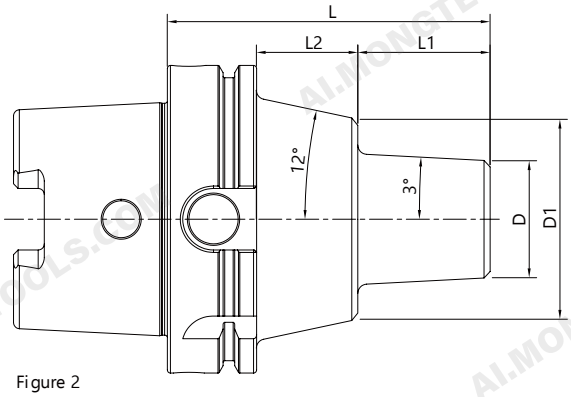

Figure 2

Size	D	D1	D2	L	L1	L2	Figure
HSK50AQTSF06Q55	19	24.6	42	55	7	22	1
HSK50AQTSF08Q55	23	28.1	42	55	7	22	1
HSK50AQTSF12Q75	38	-	-	75	49	-	2
HSK63AQTSF08Q55	23	29.5	53	55	7	22	1
HSK63AQTSF12Q75	38	-	-	75	49	-	2
HSK63AQTSF12Q135	38	-	-	135	109	-	2
HSK100AQTSF12Q105	38	65	-	105	43	33	2

HSK Shrink Chuck Taper

A ↗	RPM	
≤0.003	G2.5/25000	AD

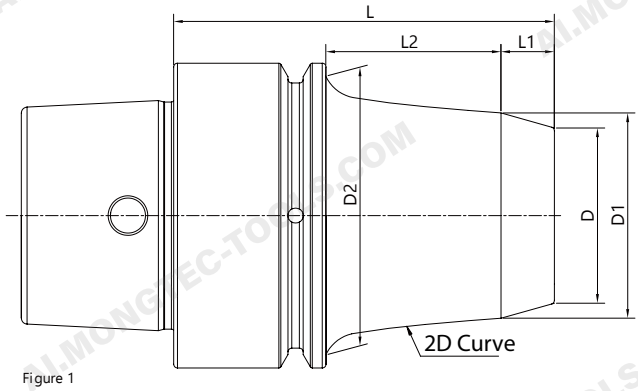

Figure 1

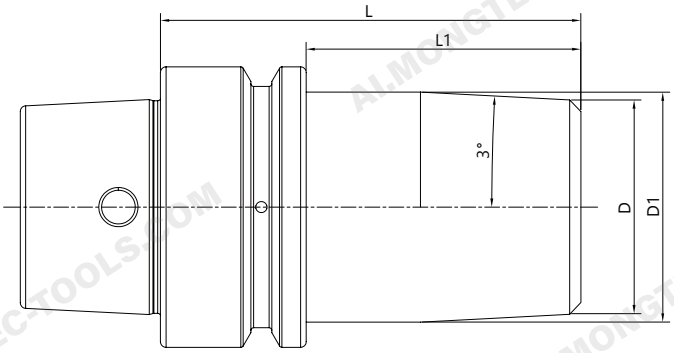

Figure 2

Size	D	D1	D2	L	L1	L2	Figure
HSK32EQTSF06Q50	19	26	-	50	7	23	1
HSK40EQTSF06Q50	19	23.5	34	50	7	23	1
HSK40EQTSF08Q50	23	27	34	50	7	23	1
HSK50EQTSF06Q55	19	24.6	42	55	7	22	1
HSK50EQTSF08Q55	23	28.1	42	55	7	22	1
HSK50EQTSF12Q75	38	-	-	75	49	-	2

HSK Shrink Chuck Taper

A ↗	RPM	
≤0.003	G2.5/25000	AD

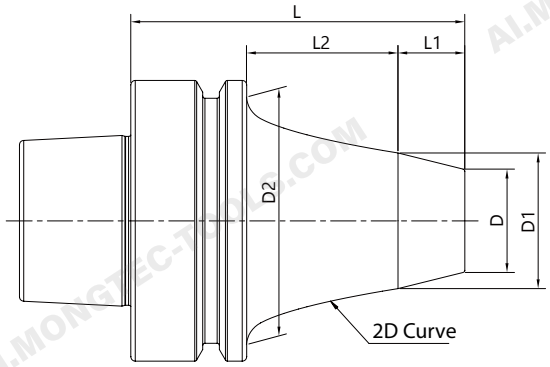

Figure 1

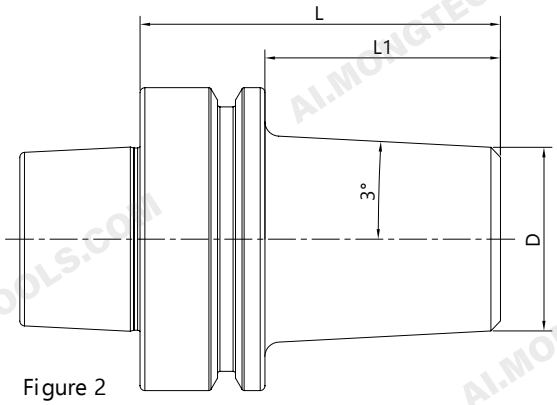

Figure 2

Size	D	D1	D2	L	L1	L2	Figure
HSK63FQTSF08Q55	23	29.5	53	55	7	22	1
HSK63FQTSF12Q75	38	-	-	75	49	-	2

BT Shrink Chuck Taper, Coolant

A ↗	RPM	
≤0.003	G2.5/25000	AD

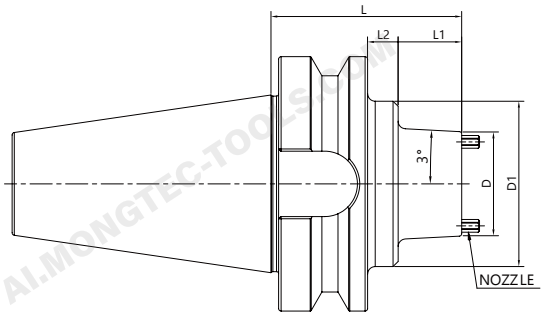

Size	D	D1	L	L1	L2
BT40QTSF12Q45K	41	-	45	18	-
BT40QTSF12Q75K	41	-	75	48	-
BT40QTSF12Q135K	41	-	135	108	-
BT50QTSF12Q75K	41	65	75	25	12
BT50QTSF12Q105K	41	65	105	55	12
BT50QTSF12Q135K	41	65	135	85	12

SK Shrink Chuck Taper, Coolant

A ↗	RPM	
≤0.003	G2.5/25000	AD

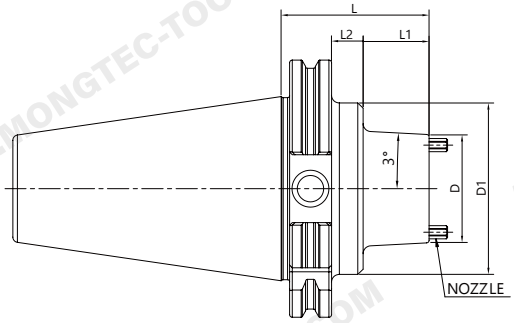

Size	D	D1	L	L1	L2
SK40QTSF12Q45K	41	-	45	25.9	-
SK40QTSF12Q75K	41	-	75	55.9	-
SK40QTSF12Q135K	41	44	135	28.6	87.3
SK50QTSF12Q75K	41	65	75	43.9	12
SK50QTSF12Q105K	41	65	105	73.9	12
SK50QTSF12Q135K	41	65	135	103.9	12

HSK Shrink Chuck Taper, Coolant

A ↗	RPM	
≤0.003	G2.5/25000	AD

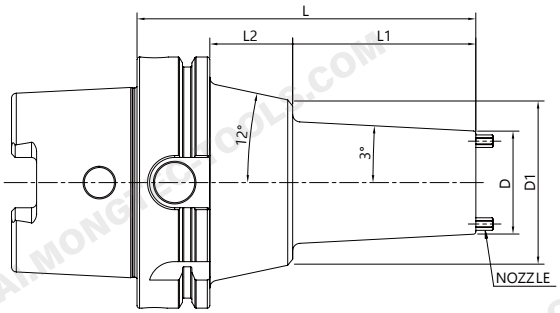

Size	D	D1	L	L1	L2
HSK63AQTSF12Q75K	41	-	75	49	-
HSK63AQTSF12Q135K	41	-	135	109	-
HSK100AQTSF12Q105K	41	65	105	43	33
HSK100AQTSF12Q135K	41	65	135	73	33

Shrink Chuck Extension , Slim

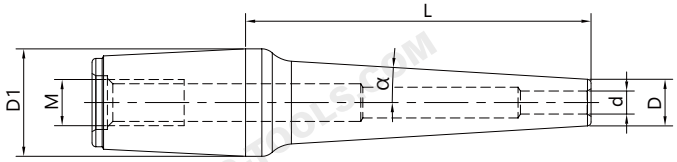

Size	d	D	D1	L	M	α
12QSF3Q35S	3	6	26	35	M10	3
12QSF3Q55S	3	6	26	55	M10	3
12QSF3Q80S	3	6	26	80	M10	3
12QSF3Q110S	3	6	26	110	M10	3
12QSF4Q35S	4	7	26	35	M10	3
12QSF4Q55S	4	7	26	55	M10	3
12QSF4Q80S	4	7	26	80	M10	3
12QSF4Q110S	4	7	26	110	M10	3
12QSF5Q35S	5	8	26	35	M10	3
12QSF5Q55S	5	8	26	55	M10	3
12QSF5Q80S	5	8	26	80	M10	3
12QSF5Q110S	5	8	26	110	M10	3
12QSF6Q35S	6	9	26	35	M10	3
12QSF6Q55S	6	9	26	55	M10	3
12QSF6Q80S	6	9	26	80	M10	3
12QSF6Q110S	6	9	26	110	M10	3
12QSF7Q35S	7	10	26	35	M10	3
12QSF7Q55S	7	10	26	55	M10	3
12QSF7Q80S	7	10	26	80	M10	3
12QSF7Q110S	7	10	26	110	M10	3
12QSF8Q35S	8	11	26	35	M10	3
12QSF8Q55S	8	11	26	55	M10	3
12QSF8Q80S	8	11	26	80	M10	3
12QSF8Q110S	8	11	26	110	M10	3

Shrink Chuck Extension , Slim

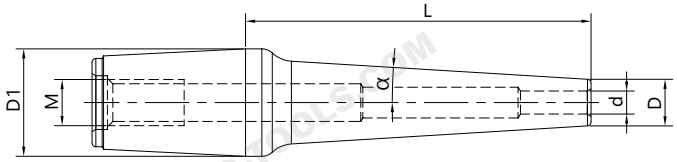

Size	d	D	D1	L	M	α
12QSF9Q35S	9	12	26	35	M10	3
12QSF9Q55S	9	12	26	55	M10	3
12QSF9Q80S	9	12	26	80	M10	3
12QSF9Q110S	9	12	26	110	M10	3
12QSF10Q35S	10	13	26	35	M10	3
12QSF10Q55S	10	13	26	55	M10	3
12QSF10Q80S	10	13	26	80	M10	3
12QSF10Q110S	10	13	26	110	M10	3
12QSF11Q35S	11	14	26	35	M10	3
12QSF11Q55S	11	14	26	55	M10	3
12QSF11Q80S	11	14	26	80	M10	3
12QSF11Q110S	11	14	26	110	M10	3
12QSF12Q35S	12	15	26	35	M10	3
12QSF12Q55S	12	15	26	55	M10	3
12QSF12Q80S	12	15	26	80	M10	3
12QSF12Q110S	12	15	26	110	M10	3

Inch

Size	d	D	D1	L	M	α
12QSF3.175Q35S	3.175	6.175	26	35	M10	3
12QSF3.175Q55S	3.175	6.175	26	55	M10	3
12QSF3.175Q80S	3.175	6.175	26	80	M10	3
12QSF3.175Q110S	3.175	6.175	26	110	M10	3

Shrink Chuck Extension, Standard

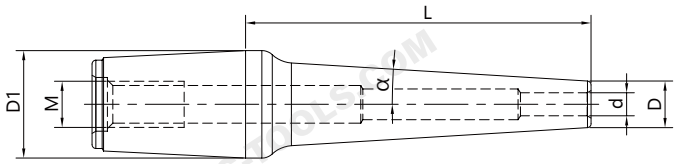

Size	d	D	D1	L	M	α
12QSF3Q35	3	7.5	26	35	M10	3
12QSF3Q55	3	7.5	26	55	M10	3
12QSF3Q80	3	7.5	26	80	M10	3
12QSF4Q35	4	10	26	35	M10	3
12QSF4Q55	4	10	26	55	M10	3
12QSF4Q80	4	10	26	80	M10	3
12QSF6Q35	6	12	26	35	M10	3
12QSF6Q55	6	12	26	55	M10	3
12QSF6Q80	6	12	26	80	M10	3
12QSF8Q35	8	14	26	35	M10	3
12QSF8Q55	8	14	26	55	M10	3
12QSF8Q80	8	14	26	80	M10	3
12QSF10Q35	10	16	26	35	M10	3
12QSF10Q55	10	16	26	55	M10	3
12QSF10Q80	10	16	26	80	M10	3
12QSF12Q35	12	20	26	35	M10	3
12QSF12Q55	12	20	26	55	M10	3
12QSF12Q80	12	20	26	80	M10	3

Shrink Chuck Extension, Coolant

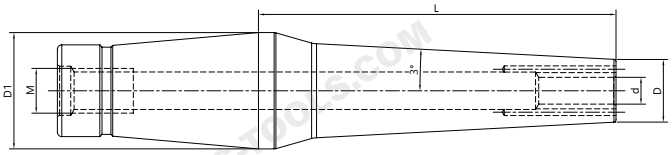

Size	d	D	D1	L	M
12QSF3Q35K	3	9.5	26	35	M10
12QSF3Q55K	3	9.5	26	55	M10
12QSF3Q80K	3	9.5	26	80	M10
12QSF4Q35K	4	12	26	35	M10
12QSF4Q55K	4	12	26	55	M10
12QSF4Q80K	4	12	26	80	M10
12QSF6Q35K	6	14	26	35	M10
12QSF6Q55K	6	14	26	55	M10
12QSF6Q80K	6	14	26	80	M10
12QSF8Q35K	8	16	26	35	M10
12QSF8Q55K	8	16	26	55	M10
12QSF8Q80K	8	16	26	80	M10
12QSF10Q35K	10	18	26	35	M10
12QSF10Q55K	10	18	26	55	M10
12QSF10Q80K	10	18	26	80	M10
12QSF12Q35K	12	20	26	35	M10
12QSF12Q55K	12	20	26	55	M10
12QSF12Q80K	12	20	26	80	M10

Shrink Chuck Set

A ↗	RPM	AD
≤0.003	G2.5/25000	

Size	Tool Holder Size	Extension Size	Extension Quantity
BT40QTSF08Q40Q4 pcs	BT40QTSF08Q40	8QSF3/4/6/8Q45S	4
BT40QTSF08Q70Q4 pcs	BT40QTSF08Q70	8QSF3/4/6/8Q45S	4
BT40QTSF12Q45Q6 pcs	BT40QTSF12Q45	12QSF3/4/6/8/10/12Q80S	6
BT40QTSF12Q75Q6 pcs	BT40QTSF12Q75	12QSF3/4/6/8/10/12Q80S	6
SK40QTSF08Q40Q4 pcs	SK40QTSF08Q40	8QSF3/4/6/8Q45S	4
SK40QTSF08Q70Q4 pcs	SK40QTSF08Q70	8QSF3/4/6/8Q45S	4
SK40QTSF12Q45Q6 pcs	SK40QTSF12Q45	12QSF3/4/6/8/10/12Q80S	6
SK40QTSF12Q75Q6 pcs	SK40QTSF12Q75	12QSF3/4/6/8/10/12Q80S	6
HSK63AQTSF08Q55Q4 pcs	HSK63AQTSF08Q55	8QSF3/4/6/8Q45S	4
HSK63AQTSF08Q75Q4 pcs	HSK63AQTSF08Q75	8QSF3/4/6/8Q45S	4
HSK63AQTSF12Q75Q6 pcs	HSK63AQTSF12Q75	12QSF3/4/6/8/10/12Q80S	6
HSK63FQTSF08Q55Q4 pcs	HSK63FQTSF08Q55	8QSF3/4/6/8Q45S	4
HSK63FQTSF08Q75Q4 pcs	HSK63FQTSF08Q75	8QSF3/4/6/8Q45S	4
HSK63FQTSF12Q75Q6 pcs	HSK63FQTSF12Q75	12QSF3/4/6/8/10/12Q80S	6

Shrink Fit Machine, Standard

- Inductive shrink fit technology
- 7''-Touch-Display, automatic parameter setting, simplified usability
- Used for carbide cutting tools

Size	Power	Power	D	DxWxH
HSM STD 2.0	380V 50HZ	13KW	Φ3-Φ32	740×580×845

Facebook WeChat YouTube Mongtec Web LINE WhatsApp

Mongtec Precision Inc.

TEL : +886-4-22653360

FAX : +886-4-22653386

E-mail : info@mongtec.com

No. 87, Sec. 1, Daqing St., South Dist., Taichung City 402024, Taiwan (R.O.C.)

Ver 2026.07