MONGTEC®

CNC職人のこだわり

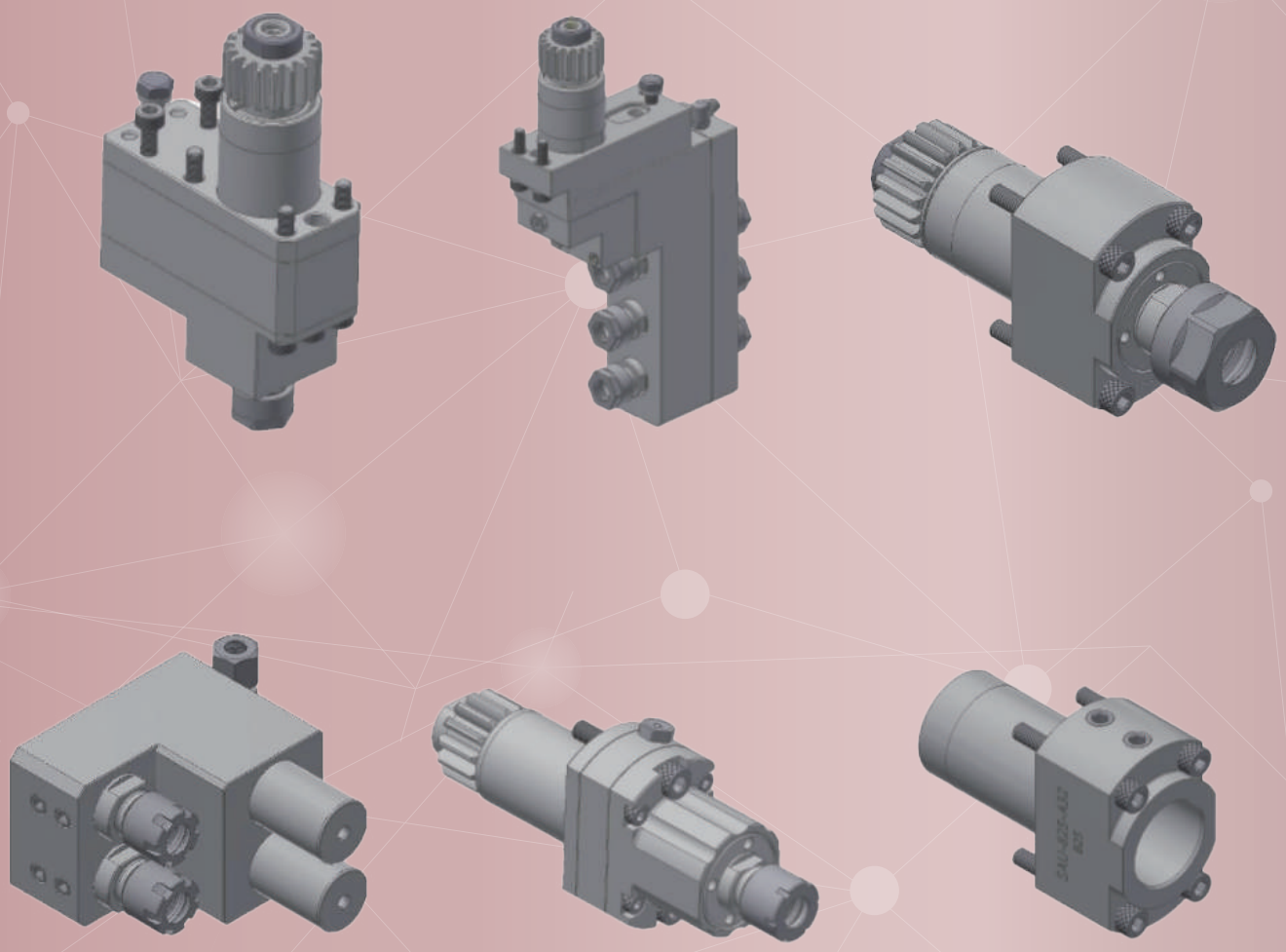

CINCOM CITIZEN
Swiss Type Toolholders

ai.mongtec-tools.com | mongtec-tools.com | info@mongtec.com

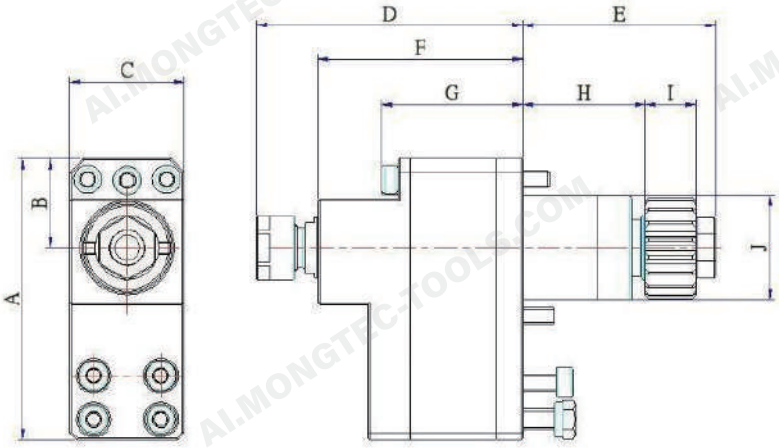

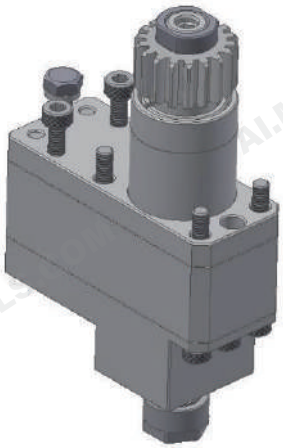

3x-Speed Live Tool Holder			
Model	A20-23310	**CINCOM Part No.**	-
Gear Ratio	1 / 3	**Max. Speed**	18000 rpm
Max. Collet Dia.	7 mm		
Collet	AR11-A, ER11-A		
Compatible Machines	A20VII(2F7/3F7)/32VII(1M7/2M7)/ L20XII(2M8/2M9/2M10/2M12)/ L32(1M8/1M9/1M10/ 1M12)/ M32(4M3/4M5/4M7/4M8)		

Model	A	B	C	D	E	F	G	H	I	J
A20-23310	83.5	26.5	34	79.3	57.5	61	42	36.5	15	Ø 31

Unit: mm

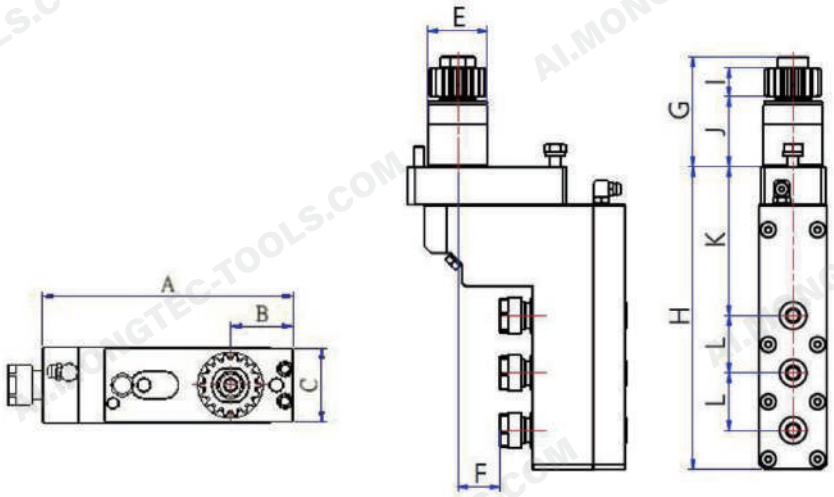

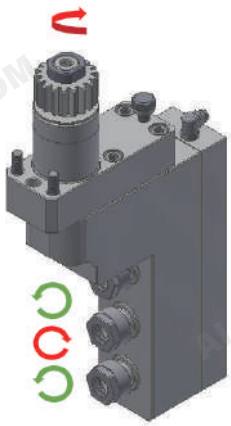

Axial Live Tool Holder			
Model	BSE707-10130	**CINCOM Part No.**	BSE607
Gear Ratio	1 / 1	**Max. Speed**	6000 rpm
Max. Collet Dia.	7 mm		
Collet	Main Spindle: AR11-A, ER11-A		
Applicable Live Tool	U31B, U32B, U33B, U34B		
Compatible Machines	A20VII(2F7/3F7) / A32VII(1M7/2M7)/ L20XII(2M8/2M9/2M10/2M12)/ L32(1M8/1M9/1M10/ 1M12)		

Model	A	B	C	E	F	G	H	I	J	K	L
BSE707-10130	117.5	29.5	34.5	Ø 31	18.7	57.5	157	15	36.5	76.5	30

Unit: mm

Specifications and dimensions are for reference only and subject to change without notice. Please confirm the latest specifications before ordering.

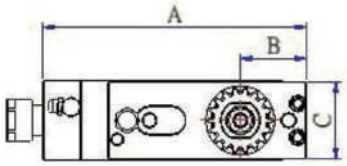

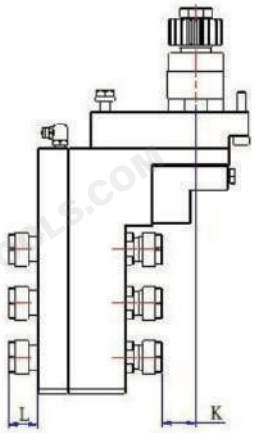

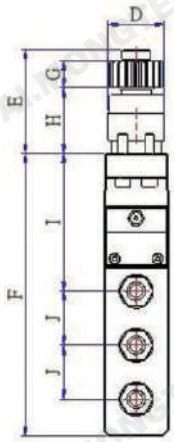

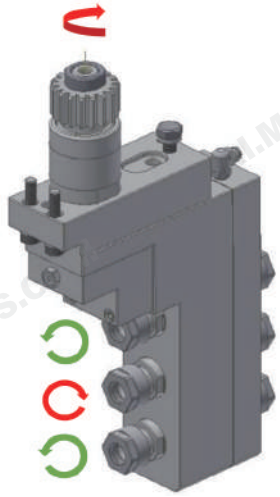

Axial Live Tool Holder			
Model	BSE707-11130	**CINCOM Part No.**	BSE707
Gear Ratio	1 / 1	**Max. Speed**	6000 rpm
Max. Collet Dia.	7 mm / 7 mm		
Collet	Main Spindle: AR11-A, ER11-A Sub Spindle: AR11-A, ER11-A		
Applicable Live Tool	U31B, U32B, U33B, U34B		
Compatible Machines	A20VII(2F7/3F7), A32(1M7/2M7)/ L20XII(2M8/2M9/2M10/2M12)/ L32(1M8/1M9/1M10/1M12)		

Model	A	B	C	D	E	F	G	H	I	J	K	L
BSE707-11130	117.5	29.5	34.5	Ø 31	57.5	157	15	36.5	76.5	30	18.7	16.3

Unit: mm

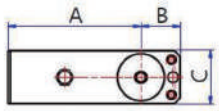

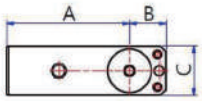

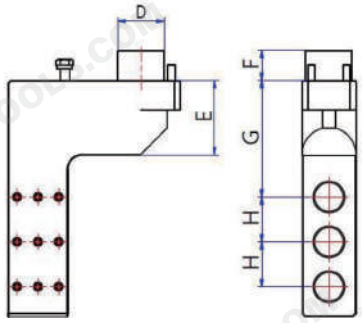

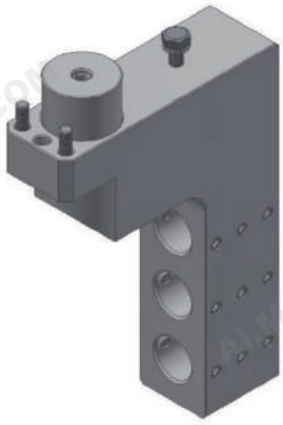

Axial Drilling Holder			
Model	L220E-11030	**CINCOM Part No.**	GDF507
Gear Ratio	-	**Max. Speed**	-
Max. Collet Dia.	-	**Bore Dia.**	Ø19.05mm
Collet	-		
Compatible Machines	L20XII(2M8/2M9/2M10/2M12)/ L32(1M8/1M9/1M10/1M12)		

Model	A	B	C	D	E	F	G	H
L220E-11030	89	26.5	36	Ø 31	50	20	78	30

Unit: mm

Specifications and dimensions are for reference only and subject to change without notice. Please confirm the latest specifications before ordering.

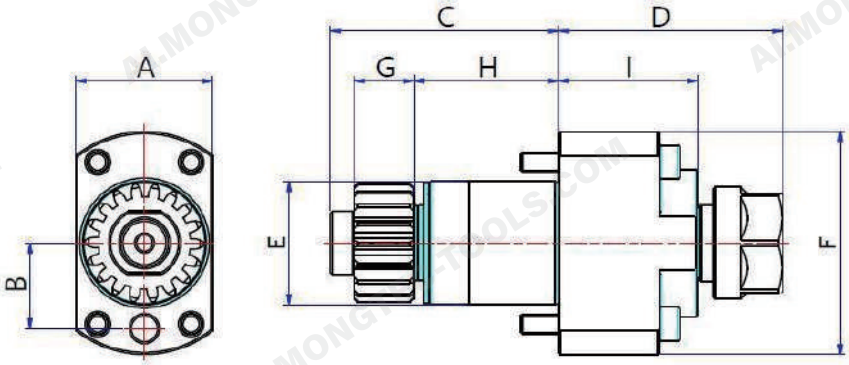

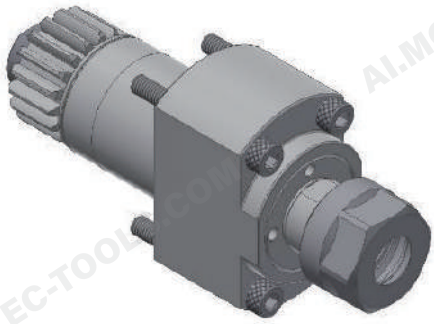

Live Tool Holder			
Model	A20-10310	**CINCOM Part No.**	GSC1110 GSC1310 CSM4-03
Gear Ratio	1 / 1	**Max. Speed**	7000 rpm
Max. Collet Dia.	10 mm		
Collet	AR16-AM, ER16-AM		
Compatible Machines	A20VII(2F7/3F7)/32VII(1M7/2M7)/ L20XII(2M8/2M9/2M10/2M12)/ L32(1M8/1M9/1M10/ 1M12)/ M32(4M3/4M5/4M7/4M8)		

Model	A	B	C	D	E	F	G	H	I
A20-10310	34.5	21.5	57.5	59	Ø 31	Ø 56	15	36.5	35

Unit: mm

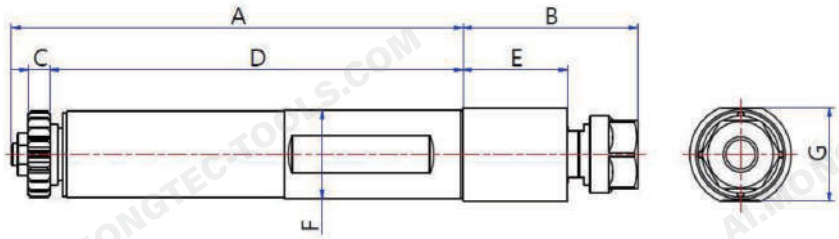

Live Tool Holder			
Model	L20VII-10310	**CINCOM Part No.**	GSC510 GSC1010 CSM4-01
Gear Ratio	1 / 1	**Max. Speed**	8000rpm
Max. Collet Dia.	10 mm		
Collet	AR16-A, ER16-A		
Compatible Machines	L16/L20(5M7/7M7)/L20E(1M8/1M9) / L20X(1M10)/M20III/M32III(2M3)/ M20III/M20V/M32III/M32V(3M3/3M5)		

Model	A	B	C	D	E	F	G
L20VII-10310	164	63.5	8	150	38	Ø 32	33.8

Unit: mm

Specifications and dimensions are for reference only and subject to change without notice. Please confirm the latest specifications before ordering.

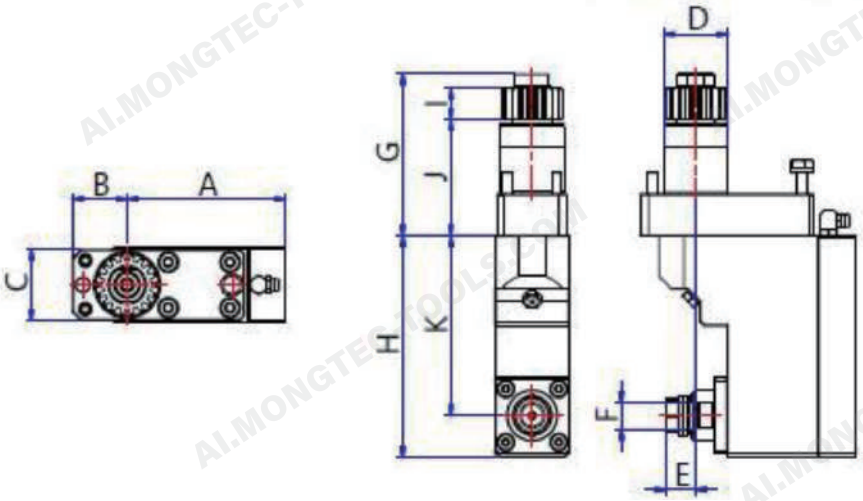

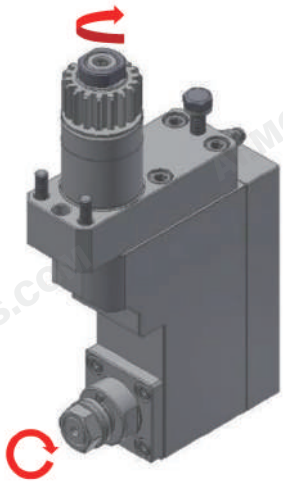

Polygon Milling Tool Holder			
Model	A20-10810	**CINCOM Part No.**	-
Gear Ratio	1 / 1	**Max. Speed**	6000rpm
Cutter	KT130480058		
Compatible Machines	A20VII(2F7/3F7), A32VII(1M7/2M7)/ L20XII(2M8/2M9/2M10/2M12)/ L32(1M8/1M9/1M10/ 1M12)/ M32(4M3/4M5/4M7/4M8)		

Model	A	B	C	D	E	F	G	H	I	J	K
A20-10810	77	26.5	34	Ø 31	14.5	Ø 13	77.5	106	15	55.5	86

Unit: mm

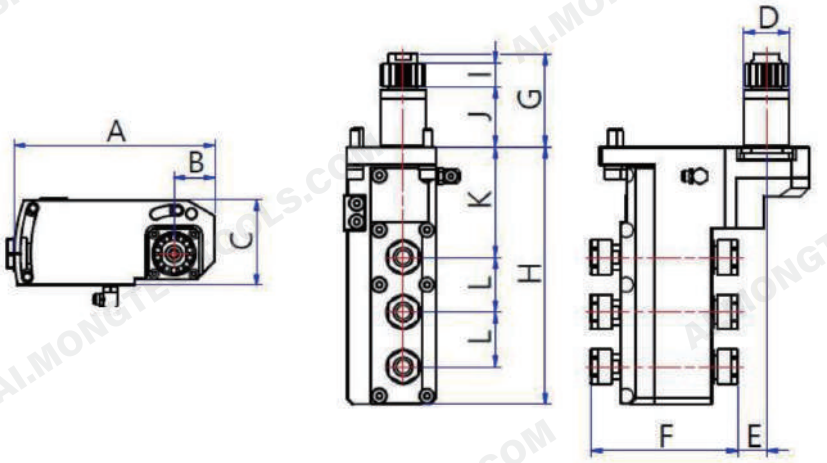

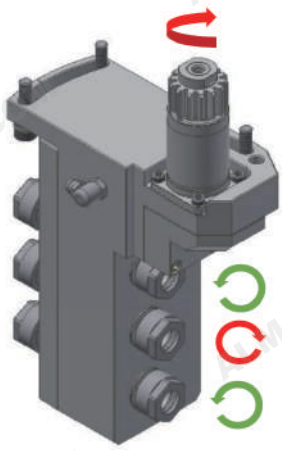

Adjustable-Angle Axial Live Tool Holder			
Model	GSE3607-15130	**CINCOM Part No.**	GSE3607
Gear Ratio	1 / 1	**Max. Speed**	10000 rpm
Max. Collet Dia.	7 mm / 7mm	**Angle Range**	0° ~ 30°
Collet	Main Spindle: AR11-A, ER11-A Sub Spindle: AR11-A, ER11-A		
Compatible Machines	L12VII		

Model	A	B	C	D	E	F	G	H	I	J	K	L
GSE3607-15130	115.5	23.5	49	Ø 25	15.7	80.6	51	141	13	33	60.5	30

Unit: mm

Specifications and dimensions are for reference only and subject to change without notice. Please confirm the latest specifications before ordering.

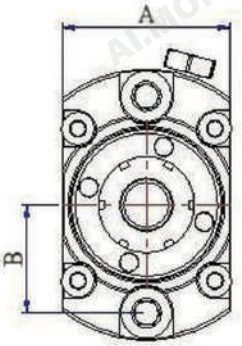

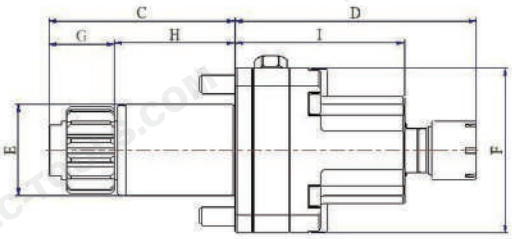

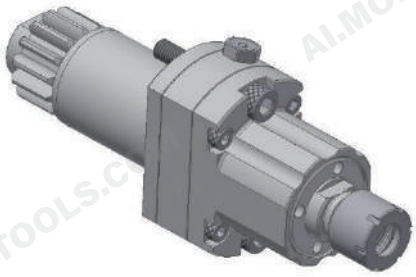

4x-Speed Live Tool Holder			
Model	GSE3507-34310	**CINCOM Part No.**	
Gear Ratio	1 / 4 Max. Collet Dia.	**Max. Speed**	40000 rpm
Collet	AR11-M, ER11-M Compatible Machines		

Model	A	B	C	D	E	F	G	H	I
GSE3507-3410	28	18	51	66.2	Ø25	Ø45	18	33	46.5

Unit: mm

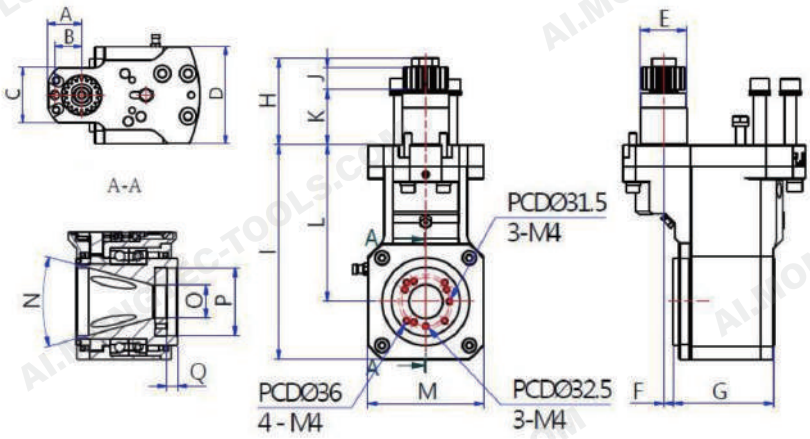

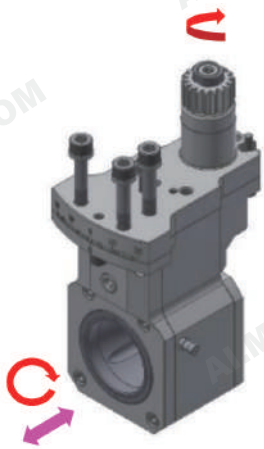

Whirling Tool Holder			
Model	L20E-15510-1	**CINCOM Part No.**	-
Gear Ratio	1 / 1	**Max. Speed**	4000 rpm
Spindle Adjustment	-	**Angle Range**	±15°
Compatible Machines	L20XII(2M8/2M9/2M10/2M12)/ L32(1M8/1M9/1M10/1M12)		

Model	A	B	C	D	E	F	G	H	I	J	K	L	M	N	O	P	Q
L20E-15510-1	27	21.5	44	77	Ø 31	6.25	73.25	57.6	142.5	15	36.6	104	77	30°	Ø 22	Ø 45	7

Unit: mm

Specifications and dimensions are for reference only and subject to change without notice. Please confirm the latest specifications before ordering.

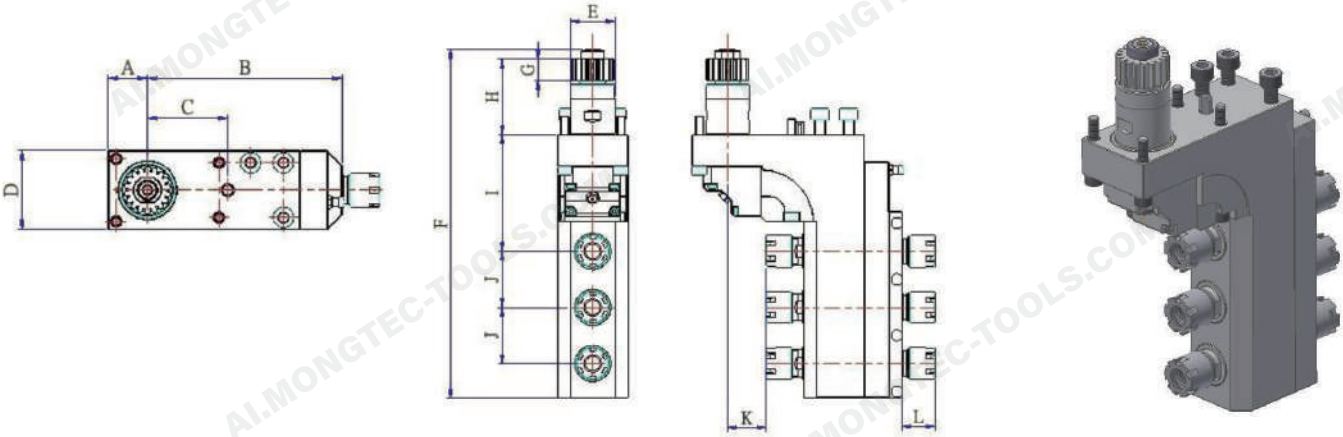

Axial Live Tool Holder			
Model	L32-11130	**CINCOM Part No.**	GSE1810
Gear Ratio	1 / 1 Max. Collet Dia.	**Max. Speed**	6000rpm
Collet	AR16-M, ER16-M Compatible Machines		

Model	A	B	C	D	E	F	G	H	I	J	K	L
L32-11130	24.5	121	50	49	Ø31	242	15	52.5	81	39	26.8	23.3

Unit: mm

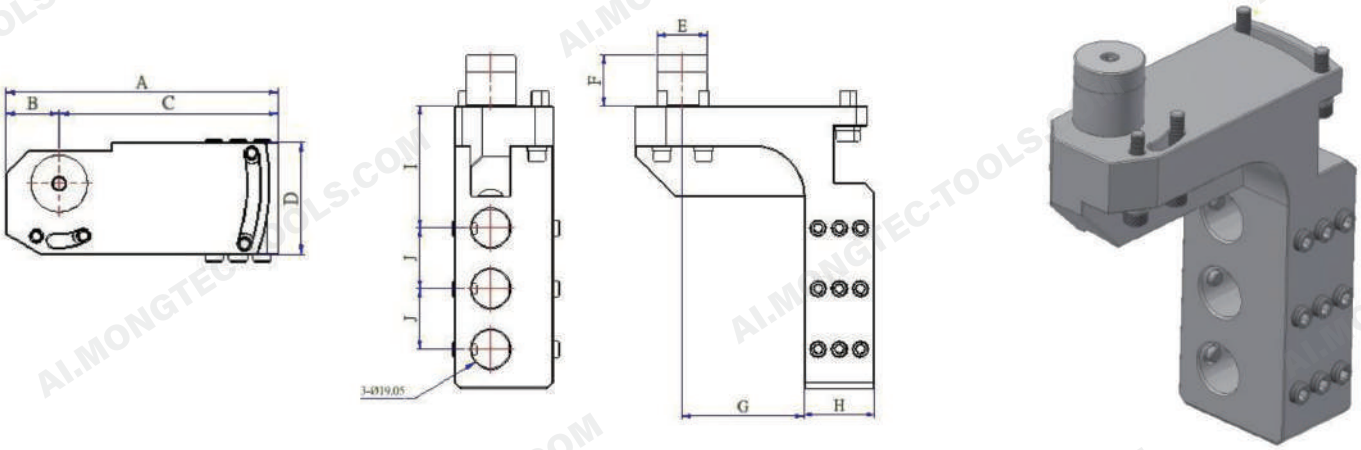

Axial Drilling Holder			
Model	GSE3607-11030	**CINCOM Part No.**	-
Gear Ratio	Max. Speed		
Max. Drill Chuck Dia.	Collet Compatible Machines	**Bore Dia.**	Ø19.05mm

Model	A	B	C	D	E	F	G	H	I	J	K
GSE3607-11030	119	23.5	95.5	48	Ø25	25	60.5	35	139.5	60.5	30

Unit: mm

Specifications and dimensions are for reference only and subject to change without notice. Please confirm the latest specifications before ordering.

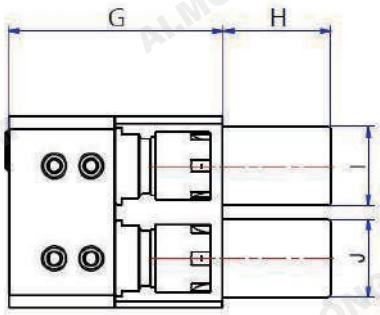

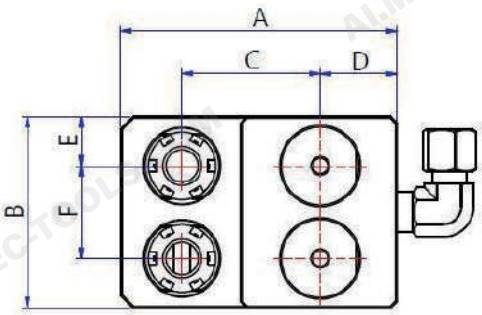

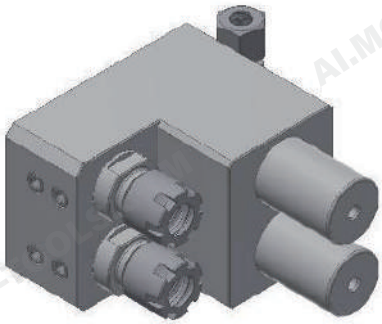

Deep-Hole Drilling Holder			
Model	A20-22021	**CINCOM Part No.**	-
Gear Ratio	-	**Max. Speed**	-
Max. Collet Dia.	10 mm	**Drilling Depth**	95 mm
Collet	AR16-M, ER16-M		
Compatible Machines	A20VII(2F7/3F7)/32VII(1M7/2M7)		

Model	A	B	C	D	E	F	G	H	I	J
A20-22021	90	62	45	25	16	30	70	35	Ø 25.4	Ø 25.4

Unit: mm

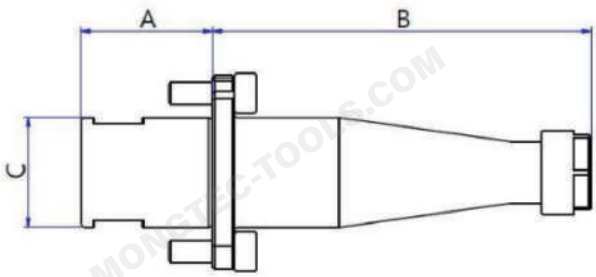

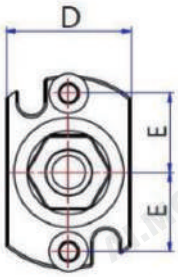

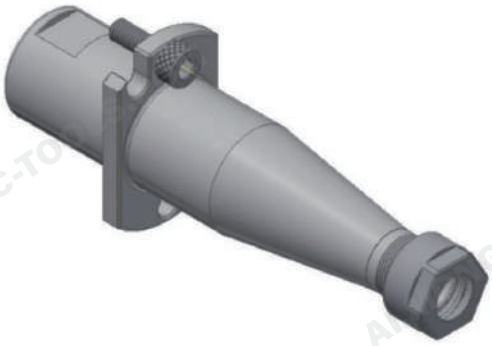

Backworking Drilling Holder			
Model	GDS107-31010	**CINCOM Part No.**	GDS107
Gear Ratio	-	**Max. Speed**	-
Max. Collet Dia.	7 mm		
Collet	AR11-A, ER11-A		
Compatible Machines	L20X(1M10)		

Model	A	B	C	D	E
GDS107-31010	30	86.3	Ø 25	28.5	18

Unit: mm

Specifications and dimensions are for reference only and subject to change without notice. Please confirm the latest specifications before ordering.

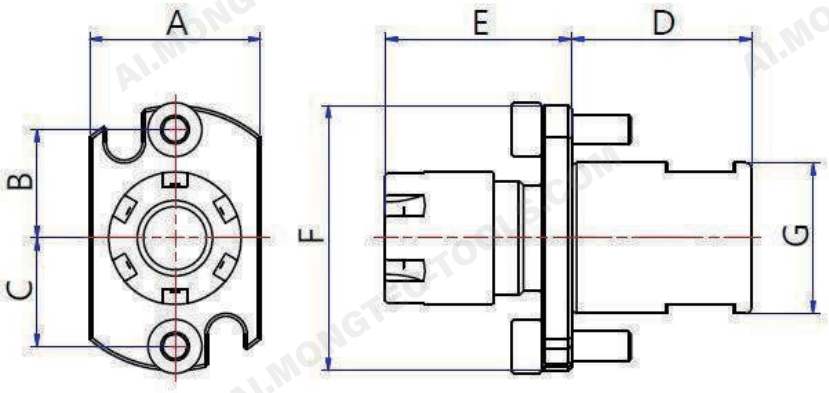

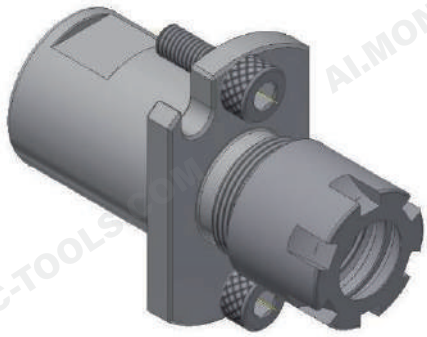

Backworking Drilling Holder			
Model	GDS210-31010	**CINCOM Part No.**	GDS210
Gear Ratio	-	**Max. Speed**	-
Max. Collet Dia.	10 mm		
Collet	AR16-M, ER16-M		
Compatible Machines	L20X(1M10)/L20XII(2M8/2M9/2M10/2M12)		

Model	A	B	C	D	E	F	G
GDS210-31010	28.5	18	18	30	31	Ø 44	Ø 25

Unit: mm

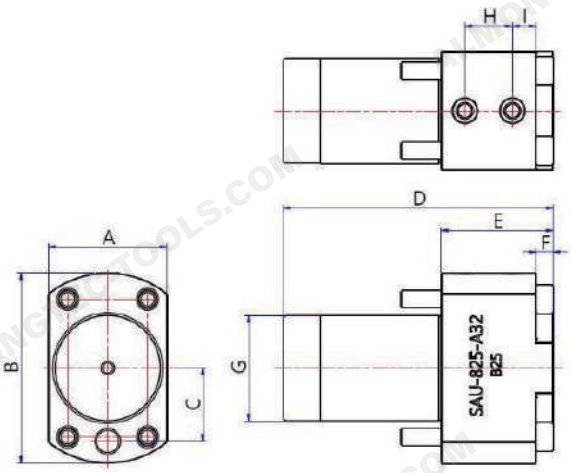

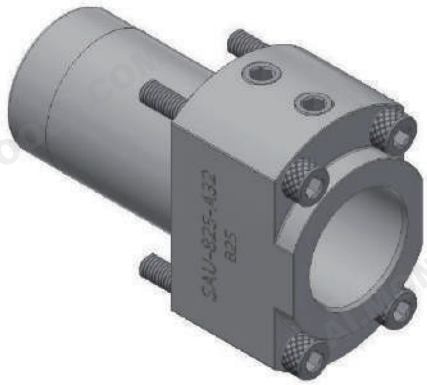

Side-Lock Tool Holder			
Model	SAU825-31310	**CINCOM Part No.**	SAU825
Gear Ratio	-	**Max. Speed**	-
Max. Collet Dia.	-	**Bore Dia.**	Ø25.4mm
Collet	-		
Compatible Machines	A32VII(2M7)/L32(1M8/1M9/1M10/1M12)		

Model	A	B	C	D	E	F	G	H	I
SAU825-31310	35	Ø 56	21.5	79.5	33	5	Ø 31	14	7

Unit: mm

Specifications and dimensions are for reference only and subject to change without notice. Please confirm the latest specifications before ordering.

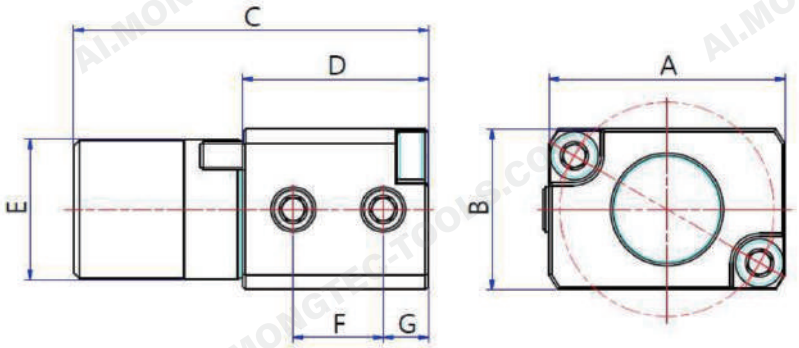

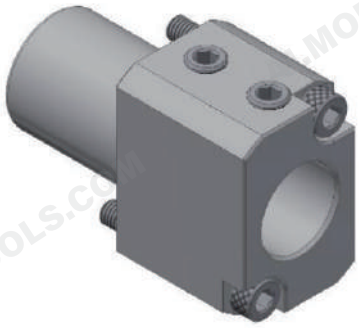

Side-Lock Tool Holder			
Model	SAU919-31310	**CINCOM Part No.**	SAU919
Gear Ratio	-	**Max. Speed**	-
Max. Collet Dia.	-	**Bore Dia.**	Ø19.05mm
Collet	-		
Compatible Machines	L20X(1M10)/L20XII(2M8/2M9/2M10/2M12)		

Model	A	B	C	D	E	F	G
SAU919-31310	42	28.5	63	33	Ø 25	16	8

Unit: mm

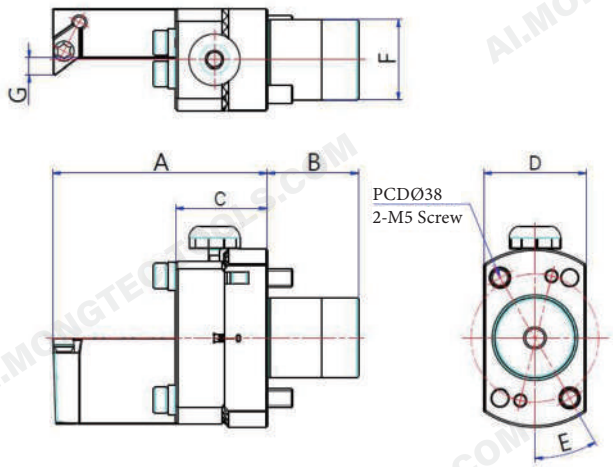

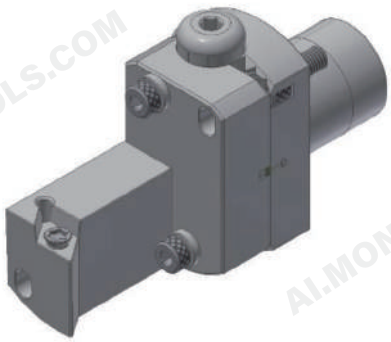

Turning Tool Holder			
Model	L20-51510	**CINCOM Part No.**	
Gear Ratio	-	**Max. Speed**	-
Vertical Adjustment	±1.0 mm		
Turning Insert	MITSUBISHI (DCM11T302)		
Compatible Machines	L20		

Model	A	B	C	D	E	F	G
L20-51510	58.69	25	25.1	28	30°	Ø 22	4.61

Unit: mm

Specifications and dimensions are for reference only and subject to change without notice. Please confirm the latest specifications before ordering.

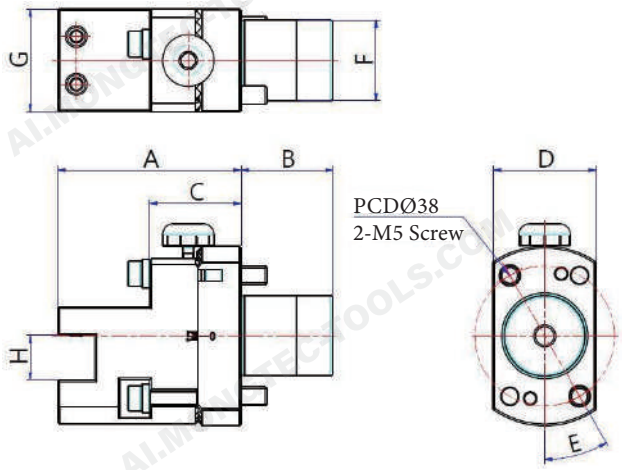

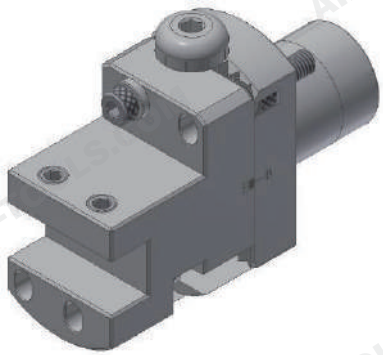

Turning Tool Holder			
Model	L20-51510-1	**CINCOM Part No.**	
Gear Ratio	-	**Max. Speed**	-
Vertical Adjustment	±1.0 mm		
Tool Shank Size	10 mm		
Compatible Machines	L20		

Model	A	B	C	D	E	F	G	H
L20-51510-1	49.9	25	24.9	28	30°	Ø 22	28	12.2

Unit: mm

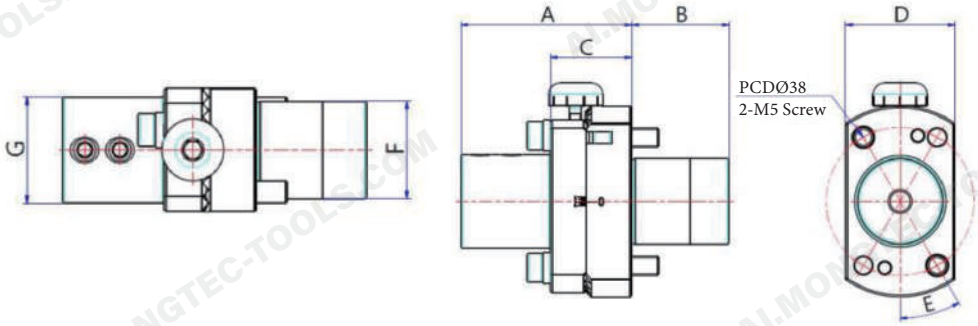

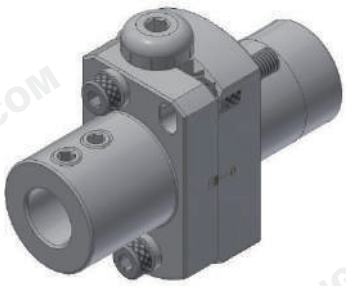

Turning Tool Holder			
Model	L20-51510-2	**CINCOM Part No.**	
Gear Ratio	-	**Max. Speed**	-
Vertical Adjustment	±1.0 mm		
Shank Dia.	ØD		
Compatible Machines	L20		

Shank Dia. ØD	Set Screw
Ø6	M6X10
Ø8	M6X8
Ø10	M6X8
Ø12	ZLM0640060

Model	A	B	C	D	E	F	G
L20-51510-2	43.9	25	20.9	28	30°	Ø 22	Ø 24

Unit: mm

Specifications and dimensions are for reference only and subject to change without notice. Please confirm the latest specifications before ordering.

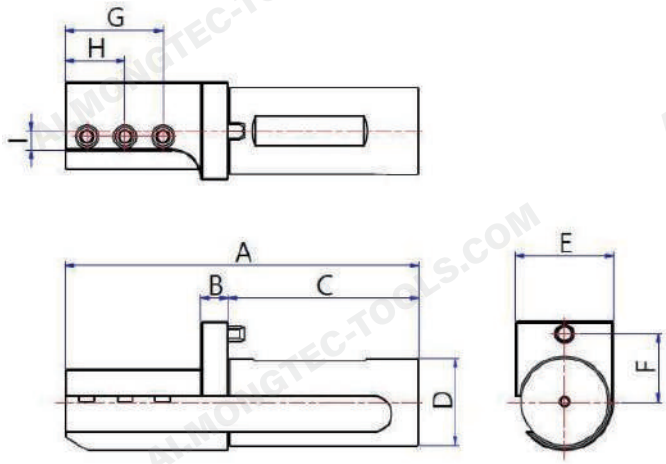

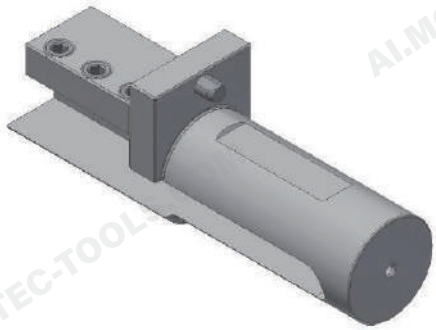

Turning Tool Holder			
Model	L20-11510	**CINCOM Part No.**	
Gear Ratio	-	**Max. Speed**	-
Vertical Adjustment	-		
Shank Dia.	-		
Compatible Machines	L20		

Model	A	B	C	D	E	F	G	H	I
L20-11510	130	10	70	Ø 32	36	25	36	22	7

Unit: mm

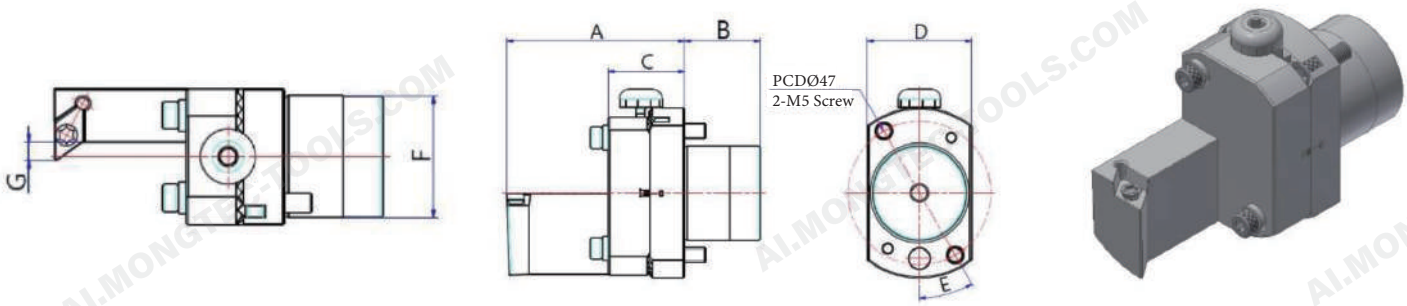

Turning Tool Holder			
Model	L32-51510	**CINCOM Part No.**	
Gear Ratio	-	**Max. Speed**	-
Vertical Adjustment	±1.0 mm		
Turning Insert	MITSUBISHI (DCM11T302)		
Compatible Machines	L32		

Model	A	B	C	D	E	F	G
L32-51510	58.69	25	25.1	34.5	30°	Ø 31	4.61

Unit: mm

Specifications and dimensions are for reference only and subject to change without notice. Please confirm the latest specifications before ordering.

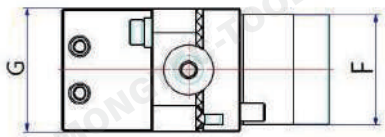

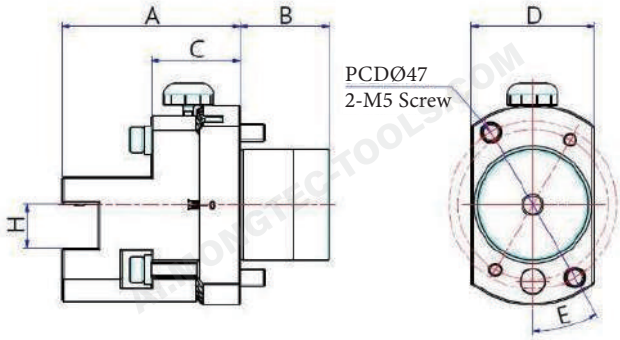

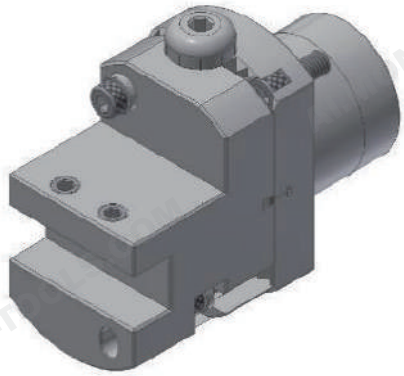

Turning Tool Holder			
Model	L32-51510-1	**CINCOM Part No.**	
Gear Ratio	-	**Max. Speed**	-
Vertical Adjustment	±1.0 mm		
Turning Insert	MITSUBISHI (DCM11T302)		
Compatible Machines	L32		

Model	A	B	C	D	E	F	G	H
L32-51510-1	49.9	25	24.9	34.5	30°	Ø 31	34.5	12.2

Unit: mm

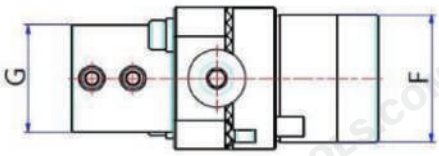

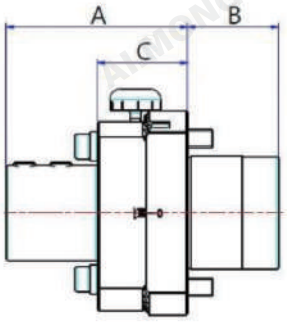

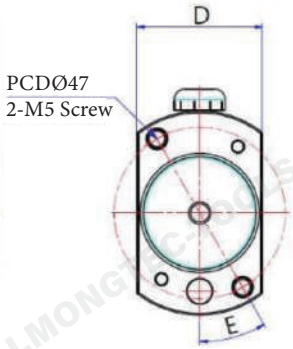

Turning Tool Holder			
Model	L32-51510-2	**CINCOM Part No.**	-
Gear Ratio	-	**Max. Speed**	-
Vertical Adjustment	±1.0 mm		
Shank Dia.	ØD		
Compatible Machines	L32		

Shank Dia. ØD	Set Screw
Ø6	M6X10
Ø8	M6X8
Ø10	M6X8
Ø12	ZLM0640060
Ø12	ZLM0640060

Model	A	B	C	D	E	F	G
L32-51510-2	49.9	25	24.9	34.5	30°	Ø 31	Ø 26

Unit: mm

Specifications and dimensions are for reference only and subject to change without notice. Please confirm the latest specifications before ordering.

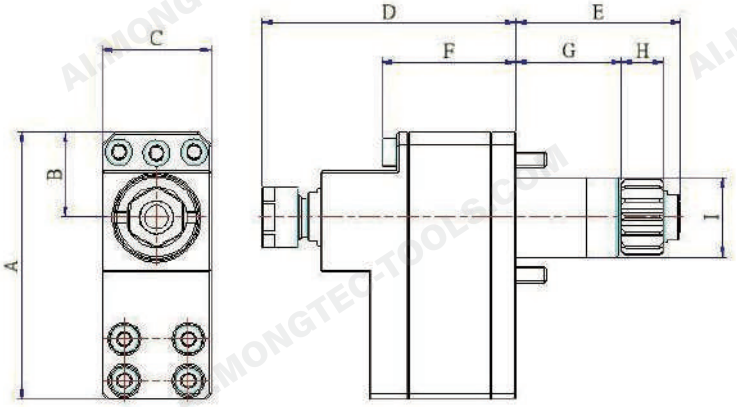

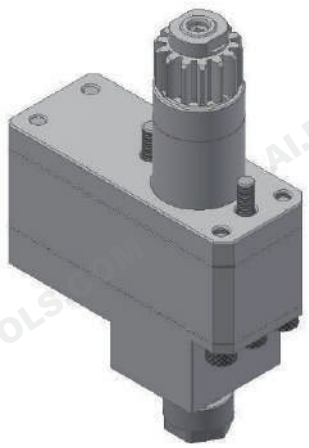

3x-Speed Backworking Live Tool Holder			
Model	L20E-33310	**CINCOM Part No.**	-
Gear Ratio	1 / 3	**Max. Speed**	18000 rpm
Max. Collet Dia.	7 mm		
Collet	AR11-A, ER11-A		
Compatible Machines	A20VII(3F7)/A32VII(2M7)/L12VII(1M7)/ L20E(1M8/1M9)/L20X(1M10)/ L20XII(2M8/2M9/ 2M10/2M12)/ M16(4M5/4M7/4M8)		

Model	A	B	C	D	E	F	G	H	I
L20E-33310	83.5	26.5	34	79.3	51.5	42	33	13	Ø 25

Unit: mm

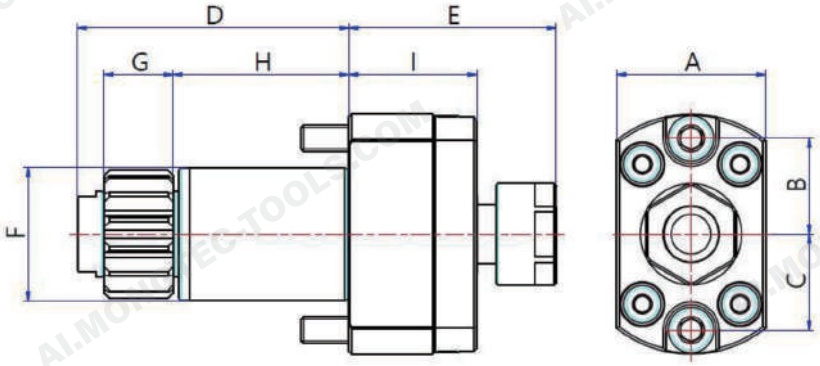

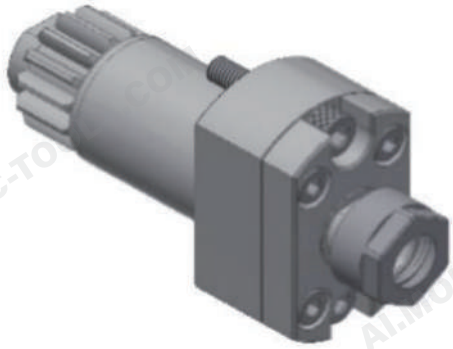

Backworking Live Tool Holder			
Model	L20E-30310	**CINCOM Part No.**	GSE3307 MSC507
Gear Ratio	1 / 1	**Max. Speed**	10000 rpm
Max. Collet Dia.	7 mm		
Collet	AR11-A, ER11-A		
Compatible Machines	A20VII(3F7)/A32VII(2M7)/L12VII(1M7) L20E(1M8/1M9)/L20X(1M10)/ L20XII(2M8/2M9/ 2M10/2M12)/ M16(4M5/4M7/4M8)		

Model	A	B	C	D	E	F	G	H	I
L20E-30310	28	18	18	51	39	Ø 25	13	33	24.1

Unit: mm

Specifications and dimensions are for reference only and subject to change without notice. Please confirm the latest specifications before ordering.

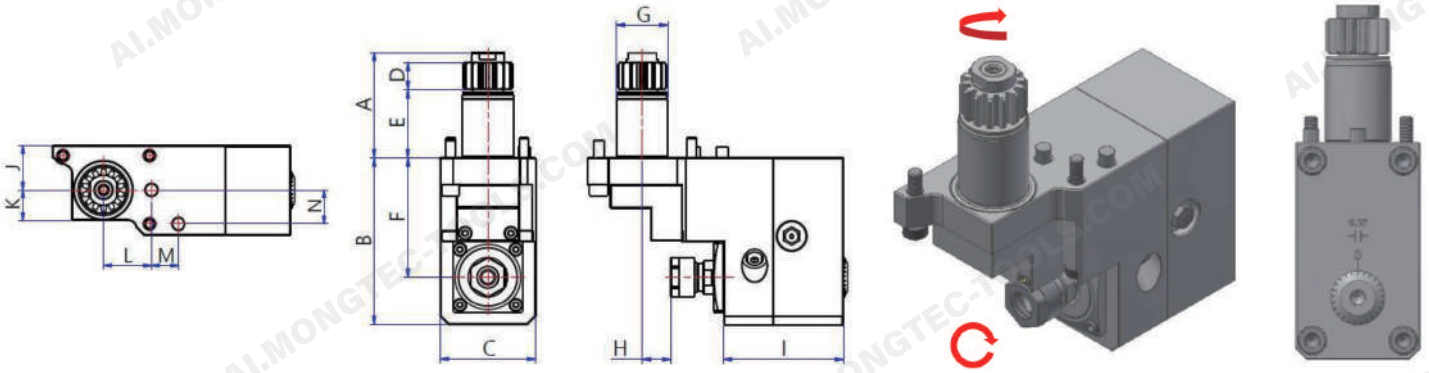

Backworking Radial Milling Holder			
Model	GSS1530-30210	**CINCOM Part No.**	GSS1330 GSS1530
Gear Ratio	1 / 0.9	**Max. Speed**	5000 rpm
Max. Collet Dia.	7 mm	**Scale Adjustment (Div.)**	0.02 mm
Spindle Adjustment	0~3 mm		
Collet	AR11-A, ER11-A		
Compatible Machines	A20VII(3F7)/A32VII(2M7)/L12VII(1M7)/ L20E(1M8/1M9)/L20X(1M10)/ L20XII(2M8/2M9/ 2M10/2M12)		

Model	A	B	C	D	E	F	G	H	I	J	K	L	M	N
GSS1530-30210	51	81	46.5	13	33	58	Ø 25	11~14	58	23.25	15.75	25	14	17.5

Unit: mm

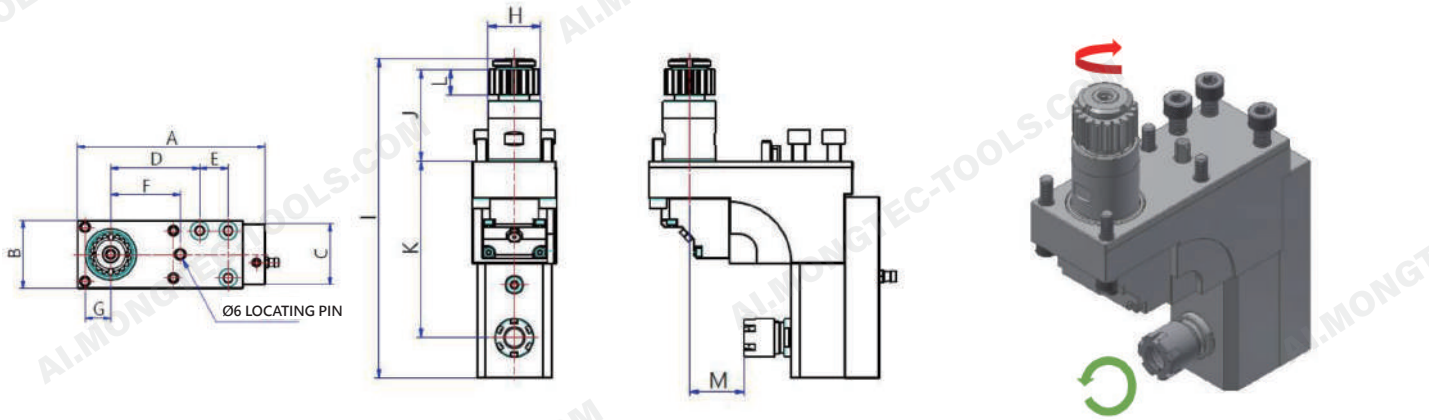

Backworking Radial Milling Holder			
Model	L32-30210	**CINCOM Part No.**	GSE1910
Gear Ratio	1 / 1	**Max. Speed**	6000 rpm
Max. Collet Dia.	10 mm		
Collet	AR16-M, ER16-M		
Compatible Machines	L32(1M9/1M10)		

Model	A	B	C	D	E	F	G	H	I	J	K	L	M
L32-30210	139.5	49	43.8	64	20.5	50	19.5	Ø 31	186	52.5	104	15	26.8

Unit: mm

Specifications and dimensions are for reference only and subject to change without notice. Please confirm the latest specifications before ordering.

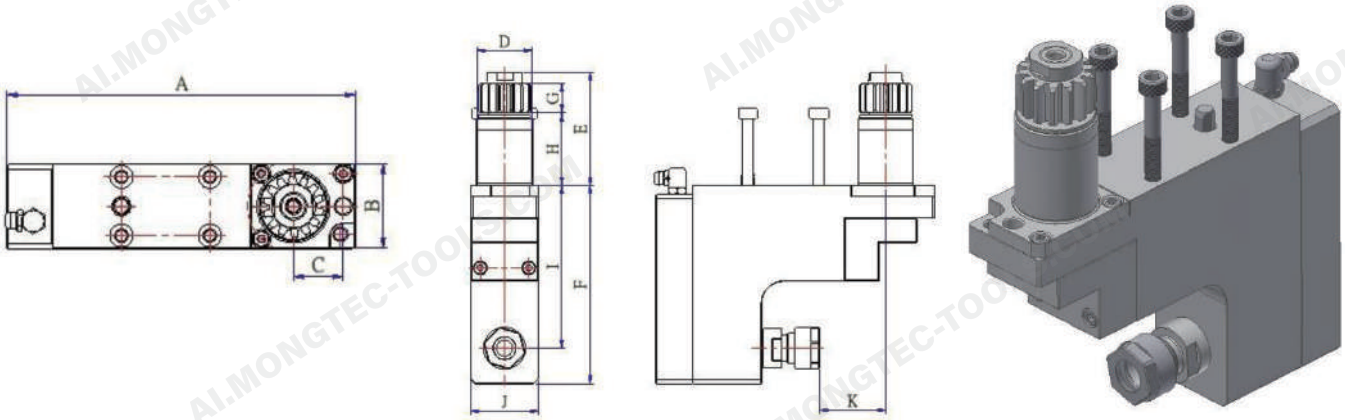

Backworking Radial Milling Holder			
Model	GSC1507-30210	**CINCOM Part No.**	
Gear Ratio	1 / 1 Max. Collet Dia.	**Max. Speed**	5000rpm
Collet	AR11-A, ER11-A		
Compatible Machines	GCS1507		

Model	A	B	C	D	E	F	G	H	I	J	K
GSC1507-30210	125.4	30.3	18	Ø25	50.7	89	13	32.7	73	30.5	29.5

Unit: mm

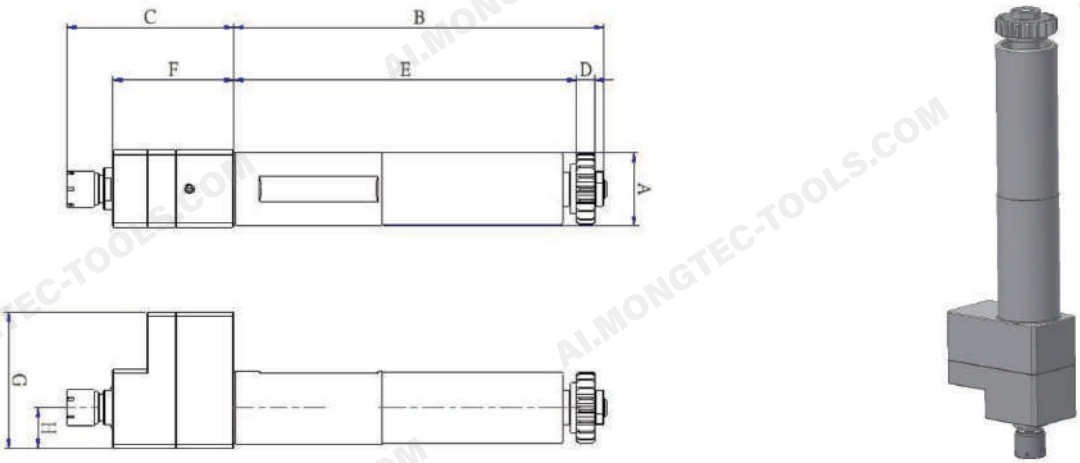

3x-Speed Backworking Live Tool Holder			
Model	L20VII-13310	**CINCOM Part No.**	
Gear Ratio	1 / 3 Max. Collet Dia.	**Max. Speed**	18000rpm
Collet	AR11-M, ER11-M Compatible Machines		

Model	A	B	C	D	E	F	G	H
L20VII-13310	Ø32	162	73.2	8	150	53	60	18

Unit: mm

Specifications and dimensions are for reference only and subject to change without notice. Please confirm the latest specifications before ordering.

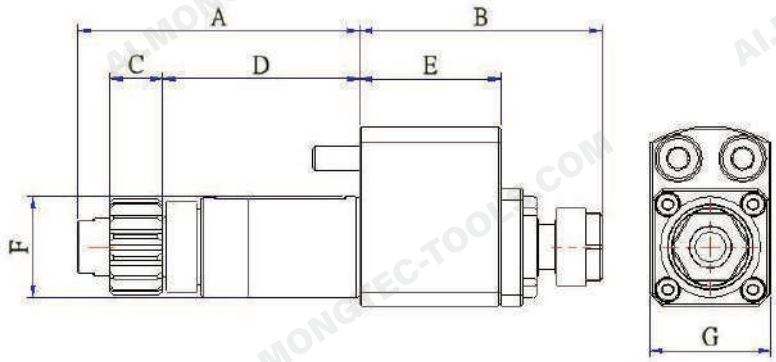

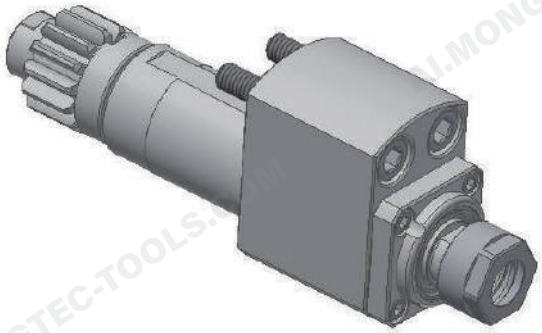

Radial Milling Spindle			
Model	L20VII-10310-1	**CINCOM Part No.**	
Gear Ratio	Max. Collet Dia.	**Max. Speed**	6000rpm
Collet	AR11-A, ER11-A Compatible Machines		

Model	A	B	C	D	E	F	G
L20VII-10310-1	70	60.1	13	49	35	Ø25	30

Unit: mm

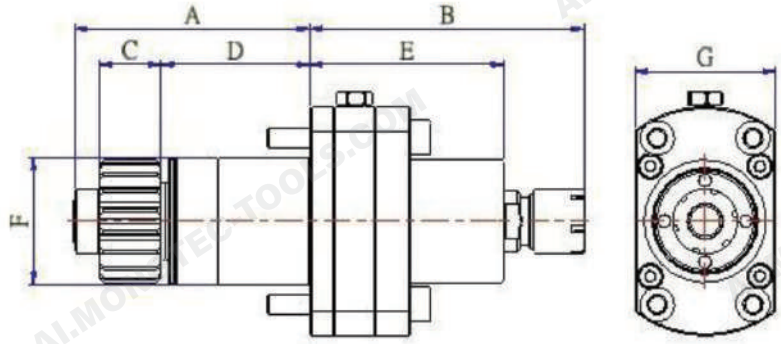

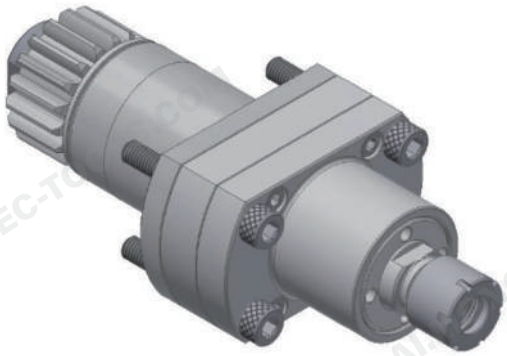

4x-Speed Straight-Shank Live Tool Holder			
Model	GSC1310-24310	**CINCOM Part No.**	
Gear Ratio	1 / 4 Max. Collet Dia.	**Max. Speed**	40000rpm
Collet	AR11-M, ER11-M Compatible Machines		

Model	A	B	C	D	E	F	G
GSC1310-24310	57.5	67.2	15	36.5	47.5	Ø31	34.5

Unit: mm

Specifications and dimensions are for reference only and subject to change without notice. Please confirm the latest specifications before ordering.

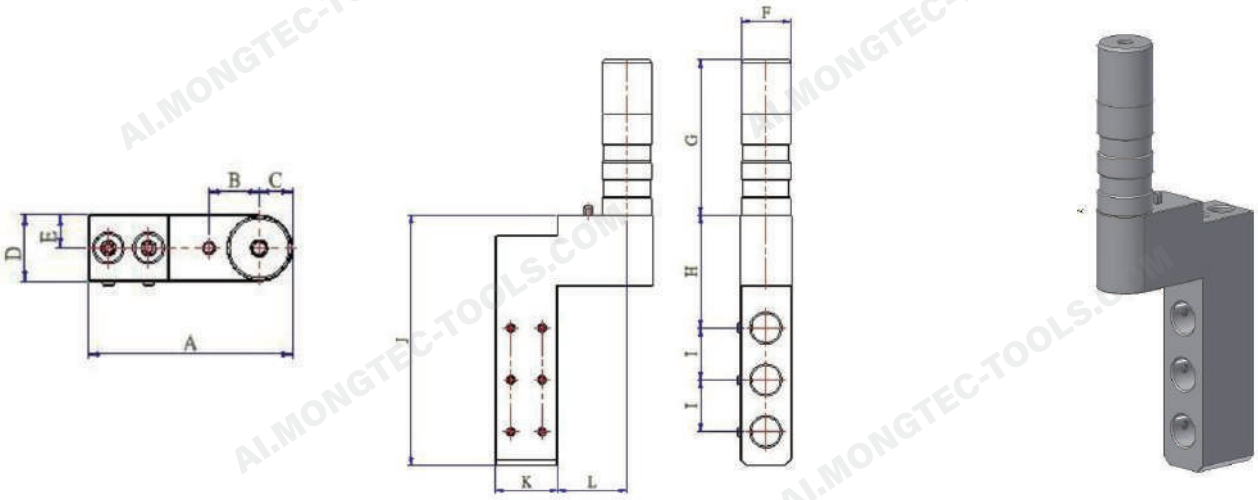

Drilling Holder			
Model	GTF3512-11030	**CINCOM Part No.**	
Gear Ratio	Max. Speed Max. Collet Dia. Collet		
Compatible Machines	L16/L20(L1620/L71620)		

Model	A	B	C	D	E	F	G	H	I	J	K	L
GTF3512-11030	101.5	25	16.5	33	16.5	Ø32	100	73	33.5	162	40	45

Unit: mm

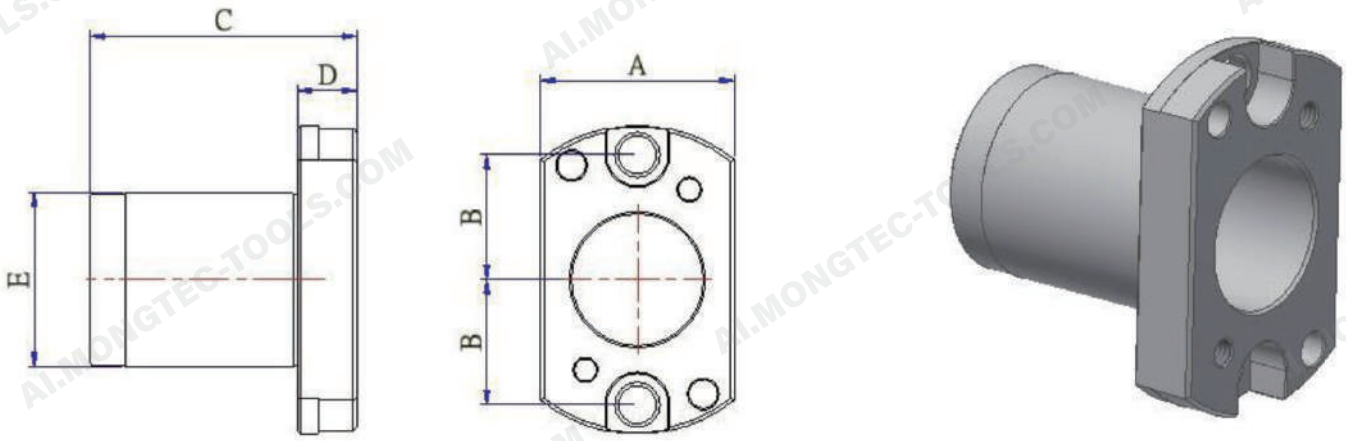

Side-Lock Tool Holder			
Model	SAU819-31310 Gear Ratio	**CINCOM Part No.**	
Max. Collet Dia.	Collet Compatible Machines	**Bore Dia.**	Ø19.05mm

Model	A	B	C	D	E
SAU819-31310	28	18	38.5	8.5	Ø25

Unit: mm

Specifications and dimensions are for reference only and subject to change without notice. Please confirm the latest specifications before ordering.

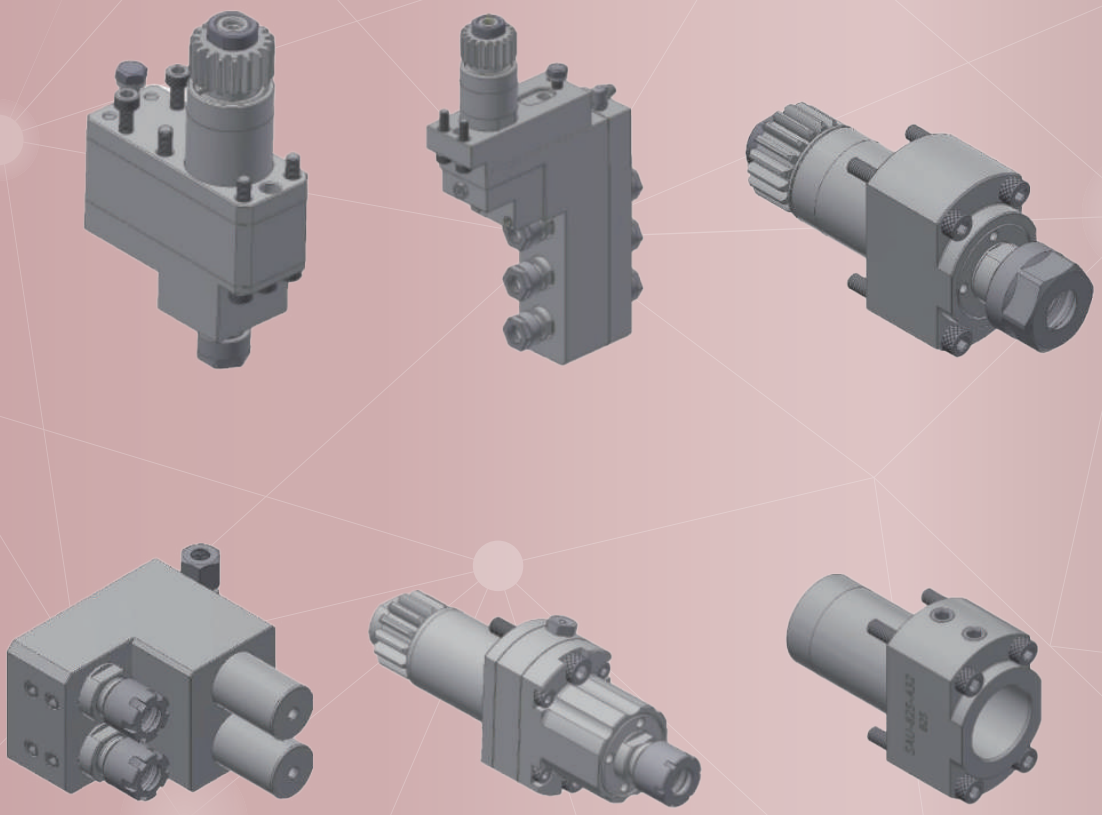

Facebook WeChat YouTube Mongtec Web LINE WhatsApp

Mongtec Precision Inc.

TEL : +886-4-22653360

FAX : +886-4-22653386

E-mail : info@mongtec.com

No. 87, Sec. 1, Daqing St., South Dist., Taichung City 402024, Taiwan (R.O.C.)