MONGTEC®
CNC職人のこだわり

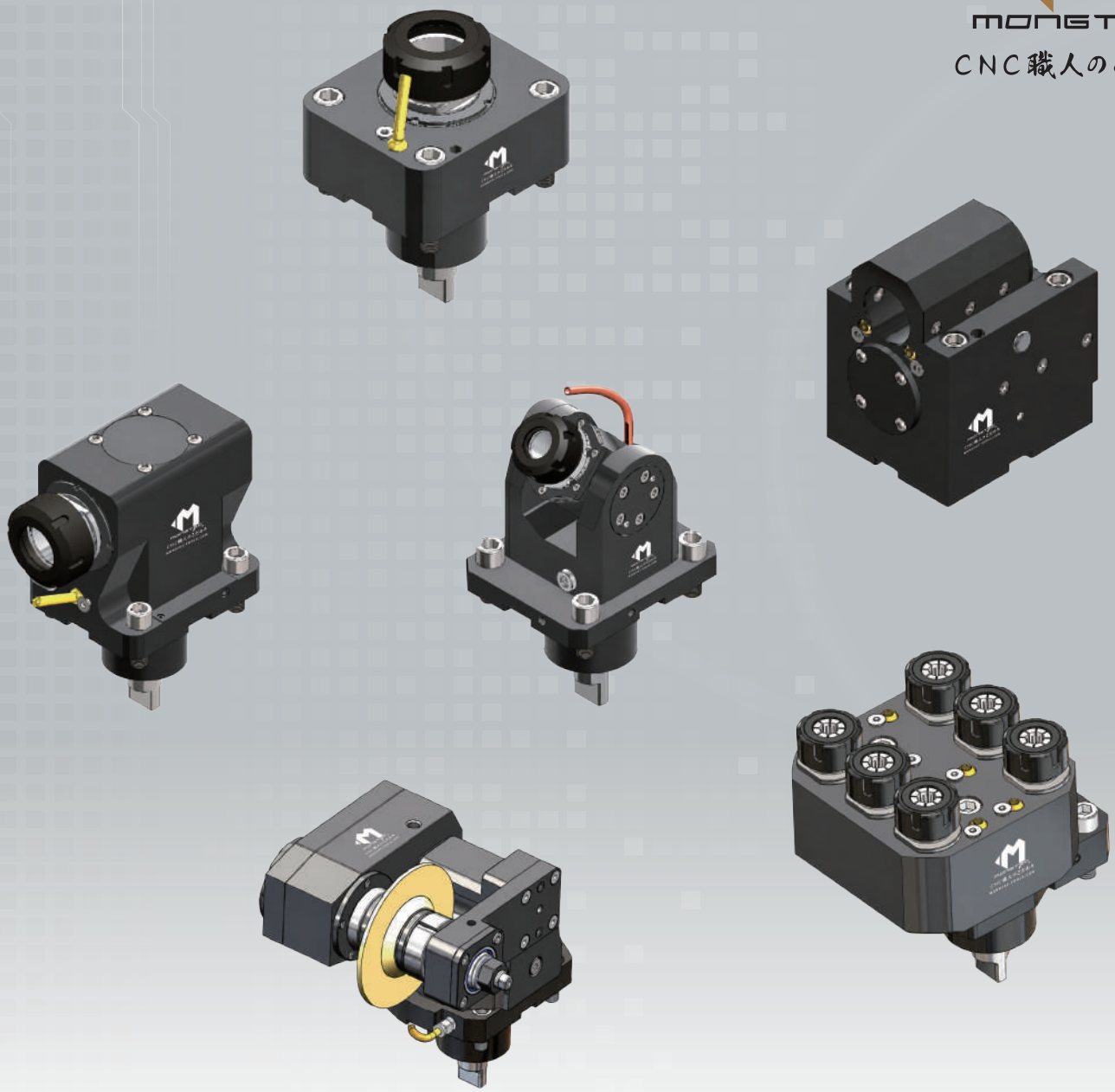

MONGTEC TOOLHOLDERS

Driven and Static Toolholders for DMG MORI NL/NLX Series

MONGTEC ai.mongtec-tools.com · mongtec-tools.com · info@mongtec.com

Table of contents

0° Driven Tools 2-5
0° Double Driven Tools 6
90° Driven Tools 7-11
Multi-spindle 90° Driven Tools 12
Universal Driven Tools 13
Gear Hobbing Tool 14
Multi-spindle 0° Driven Tools 15
Inverted Driven Tool 16
Slitting Saw 17
Power Skiving 18
Static Toolholders 19-23

0° Driven Tools

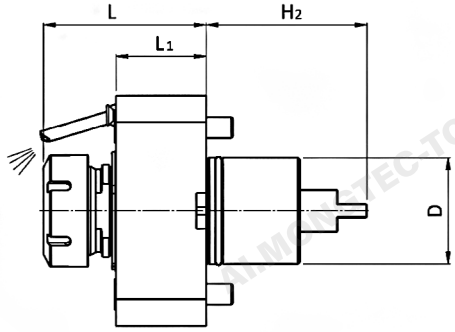

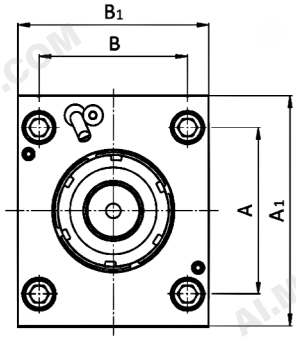

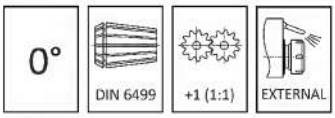

Code	D	ER	H	H1	H2	L (min-max)	L1	L2	A	B	A1	B1	A2	B2	M_2 Nm	n_2 min-1	P KW
MAH25221UNL	60	25	-	-	91	81,3÷85	51	-	94	84	130	108	-	-	60	10,000	10
MAH32221UNL	60	32	-	-	91	86,2÷89,9	51	-	94	84	130	108	-	-	60	10,000	10
MAH40121UNL	60	40	-	-	91	88,3÷92	51	-	94	84	130	108	-	-	60	10,000	10

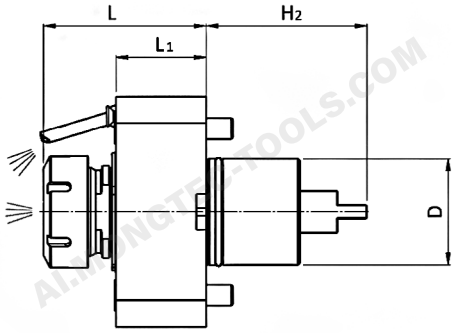

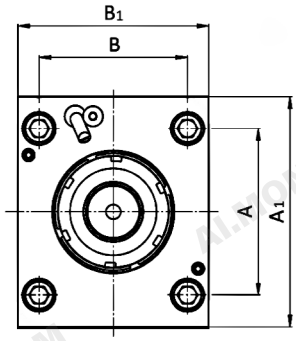

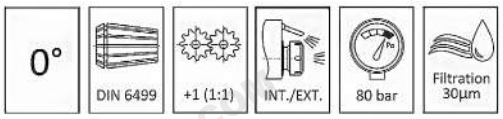

Code	D	ER	H	H1	H2	L (min-max)	L1	L2	A	B	A1	B1	A2	B2	M_2 Nm	n_2 min-1	P KW
MAH25231UNL	60	25	-	-	91	81,3÷85	51	-	94	84	130	108	-	-	60	10,000	10
MAH32231UNL	60	32	-	-	91	86,2÷89,9	51	-	94	84	130	108	-	-	60	10,000	10
MAH40131UNL	60	40	-	-	91	88,3÷92	51	-	94	84	130	108	-	-	60	10,000	10

Specifications and dimensions are for reference only and subject to change without notice. Please confirm the latest specifications before ordering.

0° Driven Tools

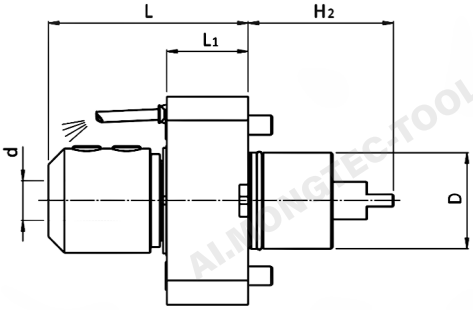

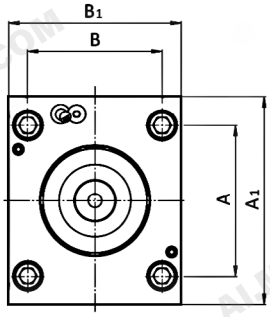

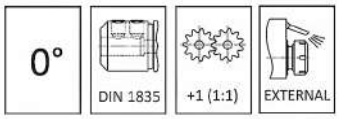

Code	D	d	H	H1	H2	L	L1	L2	A	B	A1	B1	A2	B2	M_2 Nm	n_2 min-1	P KW
MAWH20121UNL	60	Ø20	-	-	91	95	51	-	94	84	130	108	-	-	60	10,000	10
MAWH25121UNL	60	Ø25	-	-	91	125,1	51	-	94	84	130	108	-	-	60	10,000	10
MAWH1"121UNL	60	Ø1"	-	-	91	125	51	-	94	84	130	108	-	-	60	10,000	10

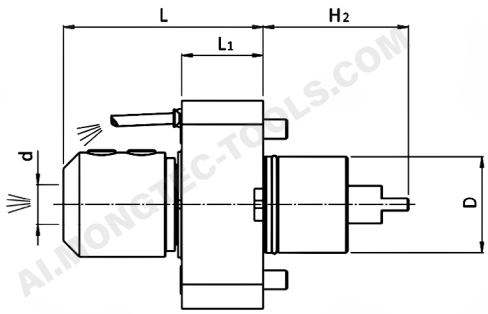

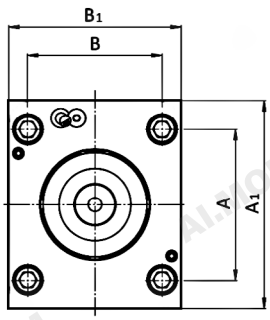

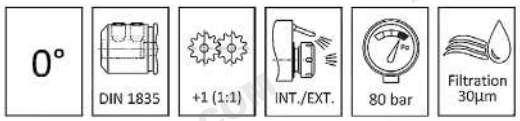

Code	D	d	H	H1	H2	L	L1	L2	A	B	A1	B1	A2	B2	M_2 Nm	n_2 min-1	P KW
MAWH20131UNL	60	Ø20	-	-	91	95	51	-	94	84	130	108	-	-	60	10,000	10
MAWH25131UNL	60	Ø25	-	-	91	125,1	51	-	94	84	130	108	-	-	60	10,000	10
MAWH1"131UNL	60	Ø1"	-	-	91	125	51	-	94	84	130	108	-	-	60	10,000	10

Specifications and dimensions are for reference only and subject to change without notice. Please confirm the latest specifications before ordering.

0° Driven Tools

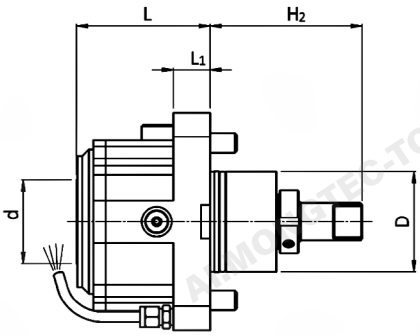

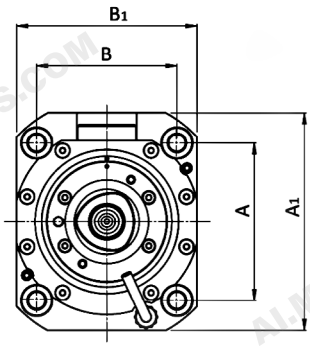

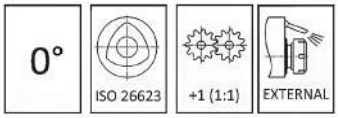

Code	D	d	H	H1	H2	L	L1	L2	A	B	A1	B1	A2	B2	M_2 Nm	n_2 min-1	P KW
MACHC5121UNL	60	C5	-	-	91	80	22	-	94	84	130	108	-	-	100	10,000	5,2
MACHC4121UNL	60	C4	-	-	91	80	22	-	94	84	130	108	-	-	100	10,000	5,2

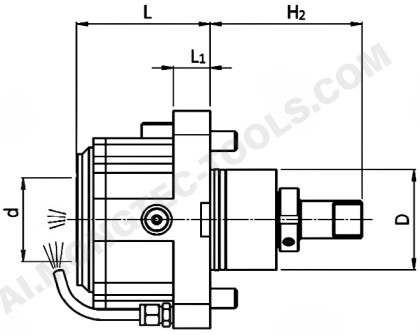

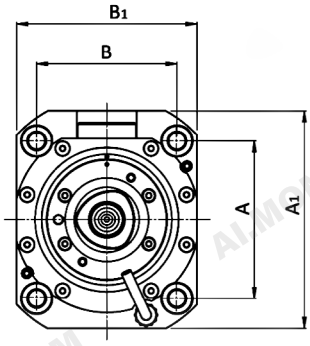

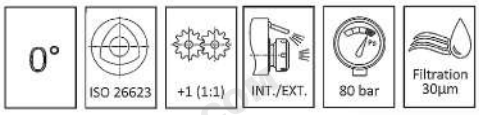

Code	D	d	H	H1	H2	L	L1	L2	A	B	A1	B1	A2	B2	M_2 Nm	n_2 min-1	P KW
MACHC5131UNL	60	C5	-	-	91	80	22	-	94	84	130	108	-	-	100	10,000	5,2
MACHC4131UNL	60	C4	-	-	91	80	22	-	94	84	130	108	-	-	100	10,000	5,2

Specifications and dimensions are for reference only and subject to change without notice. Please confirm the latest specifications before ordering.

0° Driven Tools

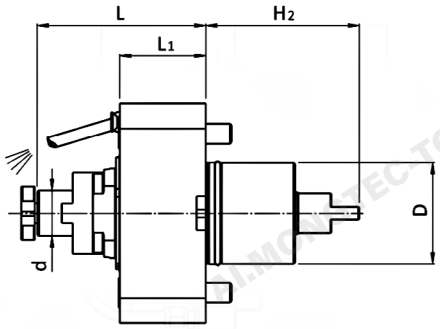

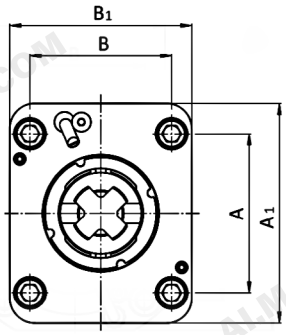

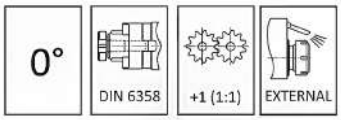

Code	D	d	H	H1	H2	L	L1	L2	A	B	A1	B1	A2	B2	M_2 Nm	n_2 min-1	P KW
MAFS22121UNL	60	Ø22	-	-	91	100	51		94	84	130	108	-	-	60	6,000	10
MAFS27121UNL	60	Ø27	-	-	91	100	51		94	84	130	108	-	-	60	6,000	10

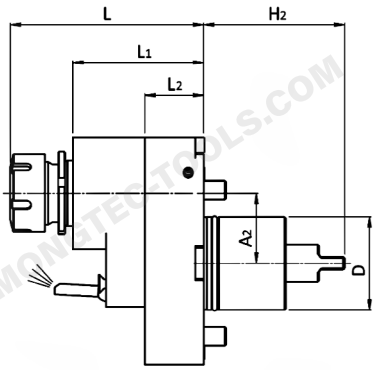

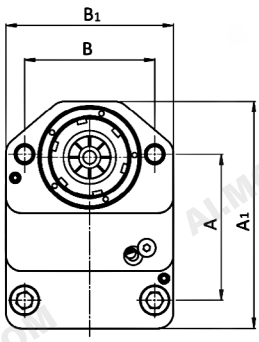

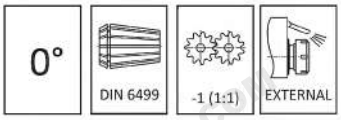

Code	D	d	H	H1	H2	L (min-max)	L1	L2	A	B	A1	B1	A2	B2	M_2 Nm	n_2 min-1	P KW
MADZ32 121UNL45	60	Ø22	-	-	91	121,3÷125	84,5	38	94	84	146	108	45	-	100	10,000	10

Specifications and dimensions are for reference only and subject to change without notice. Please confirm the latest specifications before ordering.

0° Double Driven Tools

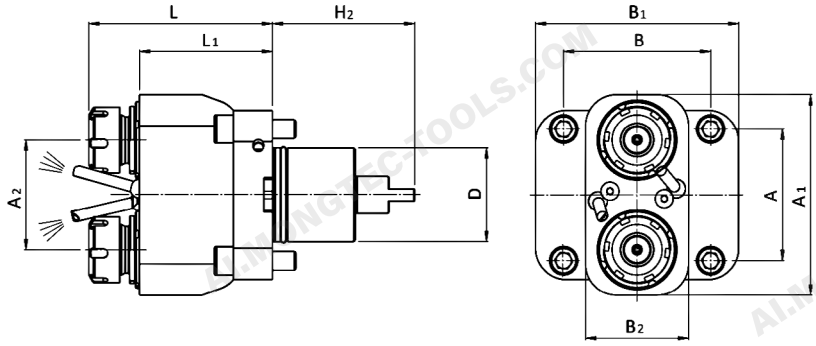

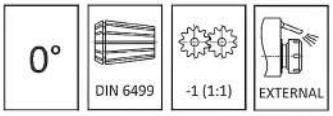

Code	D	ER	H	H1	H2	L (min-max)	L1	L2	A	B	A1	B1	A2	B2	M_2 Nm	n_2 min-1	P KW
MATY25121UNL	60	25	-	-	91	113,8÷117,5	85	-	84	94	108	130	70	66	40	6,000	10

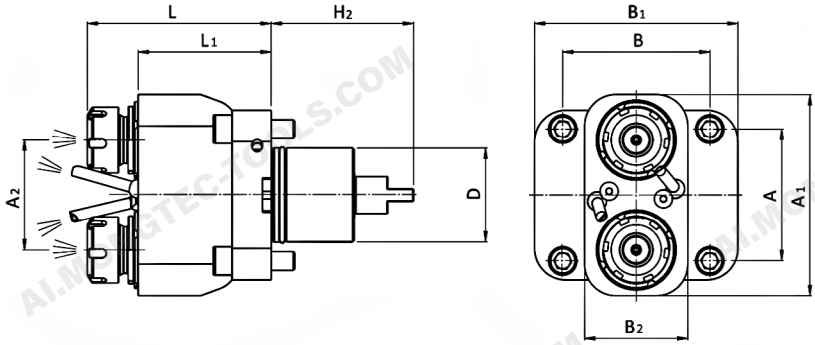

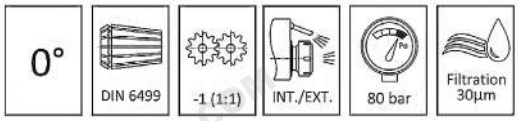

Code	D	ER	H	H1	H2	L (min-max)	L1	L2	A	B	A1	B1	A2	B2	M_2 Nm	n_2 min-1	P KW
MATY25131UNL	60	25	-	-	91	113,8÷117,5	85	-	84	94	108	130	70	66	40	6,000	10

Specifications and dimensions are for reference only and subject to change without notice. Please confirm the latest specifications before ordering.

90° Driven Tools

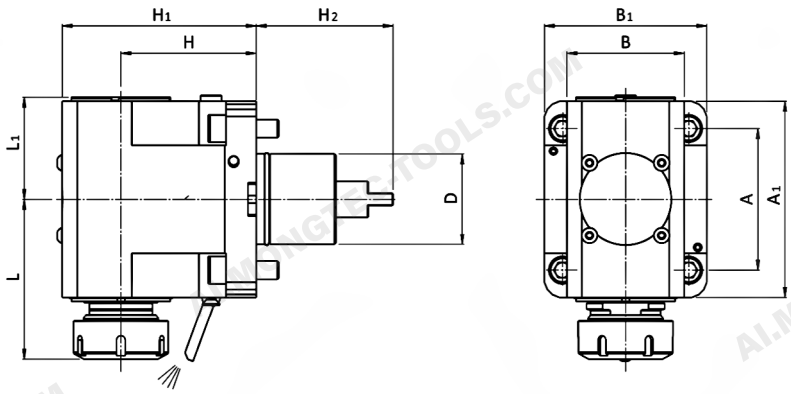

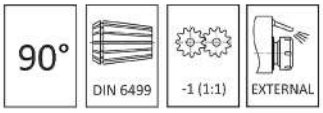

Code	D	ER	H	H1	H2	L (min-max)	L1	L2	A	B	A1	B1	A2	B2	M_2 Nm	n_2 min-1	P KW
MRH25121UNL	60	25	90	129	91	95,3÷99	67,7	-	94	84	130	108	-	-	60	10,000	10
MRH32121UNL	60	32	90	129	91	100÷103,9	67,7	-	94	84	130	108	-	-	60	10,000	10
MRH40121UNL	60	40	90	129	91	102,3÷106	67,7	-	94	84	130	108	-	-	60	10,000	10

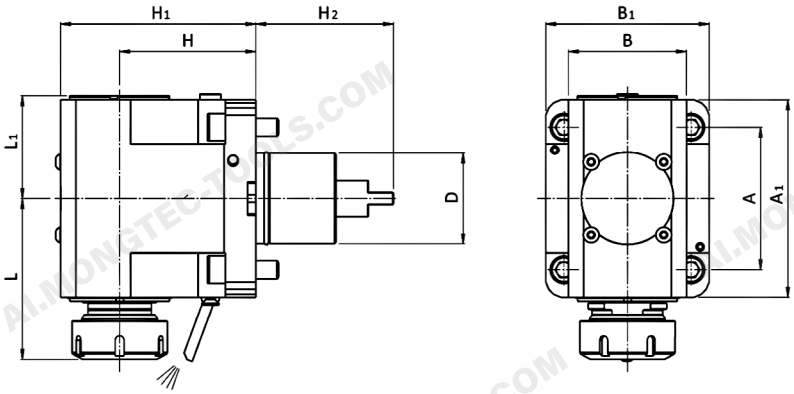

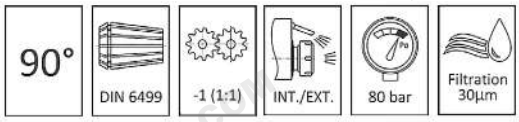

Code	D	ER	H	H1	H2	L (min-max)	L1	L2	A	B	A1	B1	A2	B2	M_2 Nm	n_2 min-1	P KW
MRH25131UNL	60	25	90	129	91	95,3÷99	66,6	-	94	84	130	108	-	-	60	10,000	10
MRH32131UNL	60	32	90	129	91	100÷103,9	66,6	-	94	84	130	108	-	-	60	10,000	10
MRH40131UNL	60	40	90	129	91	102,3÷106	66,6	-	94	84	130	108	-	-	60	10,000	10

Specifications and dimensions are for reference only and subject to change without notice. Please confirm the latest specifications before ordering.

90° Driven Tools

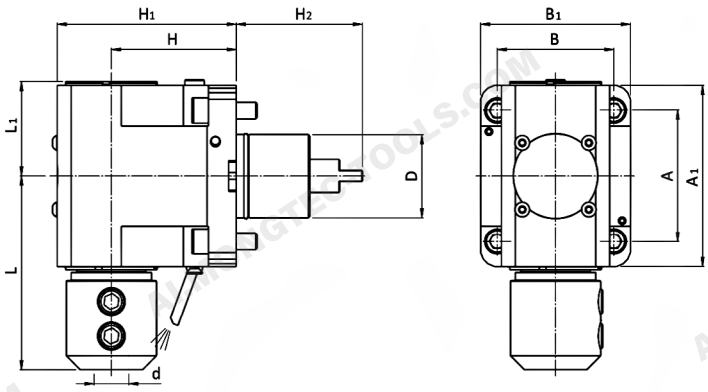

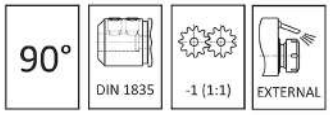

Code	D	d	H	H1	H2	L	L1	L2	A	B	A1	B1	A2	B2	M_2 Nm	n_2 min-1	P KW
MRWH20121UNL	60	Ø20	90	129	91	109	67,7	-	94	84	130	108	-	-	60	10,000	10
MRWH25121UNL	60	Ø25	90	129	91	139	67,7	-	94	84	130	108	-	-	60	10,000	10
MRWH1”121UNL	60	Ø1”	90	129	91	139	67,7	-	94	84	130	108	-	-	60	10,000	10

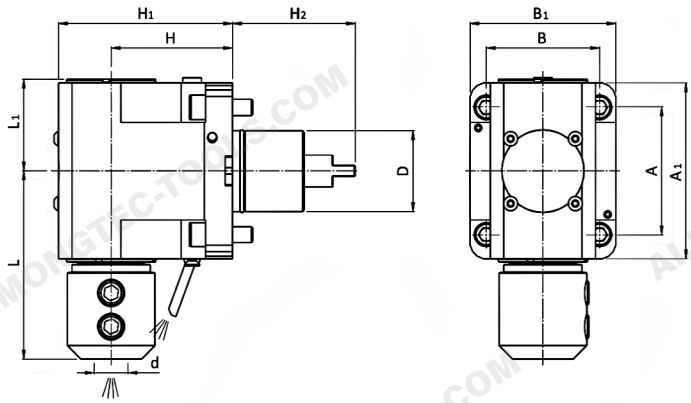

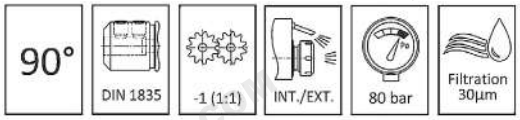

Code	D	d	H	H1	H2	L	L1	L2	A	B	A1	B1	A2	B2	M_2 Nm	n_2 min-1	P KW
MRWH20131UNL	60	Ø20	90	129	91	109	66,6	-	94	84	130	108	-	-	60	10,000	10
MRWH25131UNL	60	Ø25	90	129	91	139	66,6	-	94	84	130	108	-	-	60	10,000	10
MRWH1”131UNL	60	Ø1”	90	129	91	139	66,6	-	94	84	130	108	-	-	60	10,000	10

Specifications and dimensions are for reference only and subject to change without notice. Please confirm the latest specifications before ordering.

90° Driven Tools

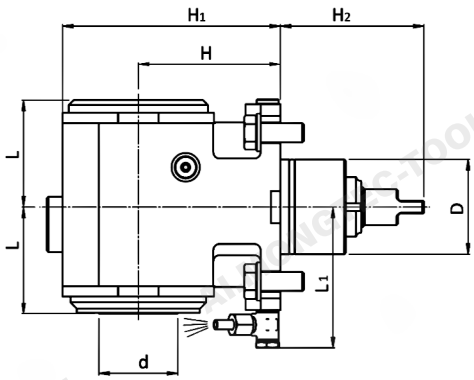

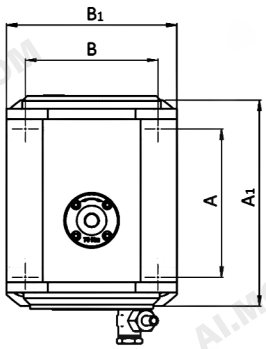

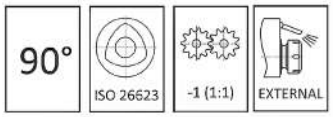

Code	D	d	H	H1	H2	L	L1	L2	A	B	A1	B1	A2	B2	M_2 Nm	n_2 min-1	P KW
MRCHC5121UNL	60	C5	90	138	91	68	89	-	94	84	130	108	-	-	100	10,000	5,2
MRCHC4121UNL	60	C4	90	138	91	68	89	-	94	84	130	108	-	-	100	10,000	5,2

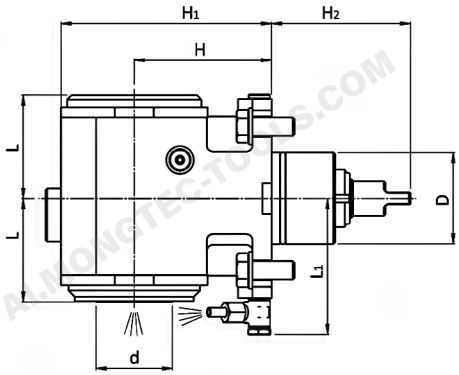

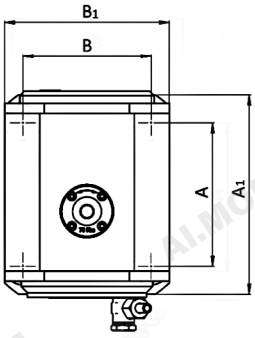

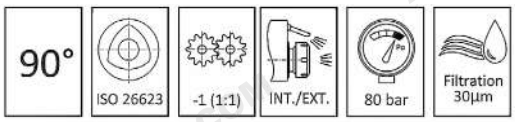

Code	D	d	H	H1	H2	L	L1	L2	A	B	A1	B1	A2	B2	M_2 Nm	n_2 min-1	P KW
MRCHC5131UNL	60	C5	90	138	91	68	89	-	94	84	130	108	-	-	100	10,000	5,2
MRCHC4131UNL	60	C4	90	138	91	68	89	-	94	84	130	108	-	-	100	10,000	5,2

Specifications and dimensions are for reference only and subject to change without notice. Please confirm the latest specifications before ordering.

90° Driven Tools

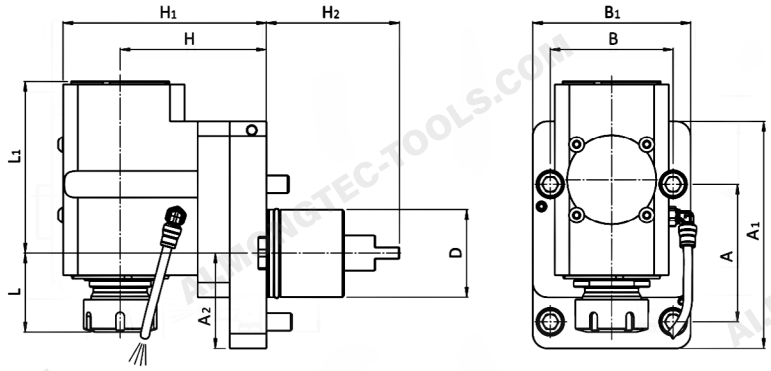

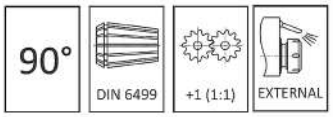

Code	D	ER	H	H1	H2	L (min-max)	L1	L2	A	B	A1	B1	A2	B2	M_2 Nm	n_2 min-1	P KW
MRAH32321UNL	60	32	100	139	91	50,2÷53,9	117	-	94	84	155	108	65	-	60	10,000	10

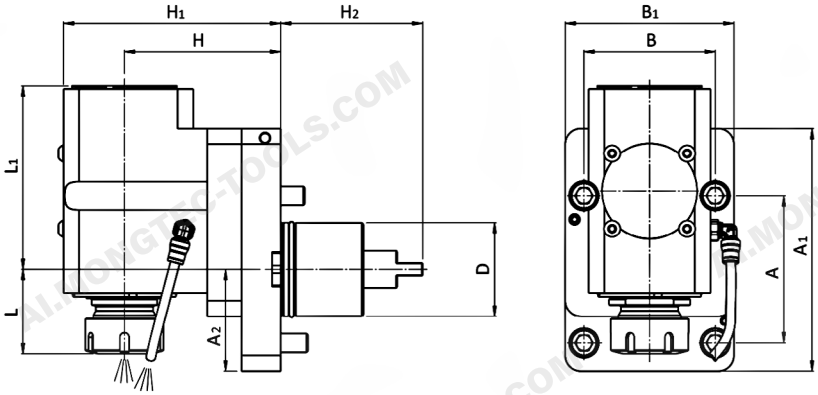

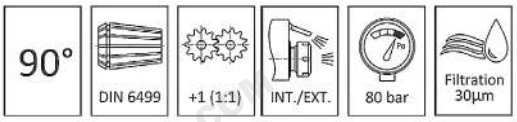

Code	D	ER	H	H1	H2	L (min-max)	L1	L2	A	B	A1	B1	A2	B2	M_2 Nm	n_2 min-1	P KW
MRAH32331UNL	60	32	100	139	91	50,2÷53,9	117	-	94	84	155	108	65	-	60	10,000	10

Specifications and dimensions are for reference only and subject to change without notice. Please confirm the latest specifications before ordering.

90° Driven Tools

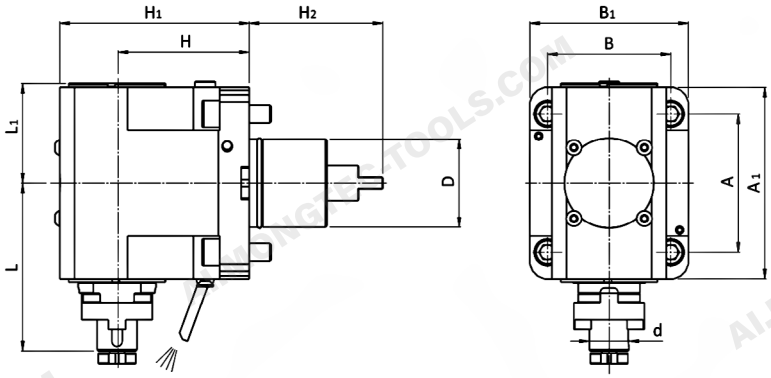

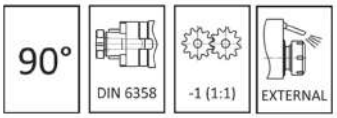

Code	D	d	H	H1	H2	L	L1	L2	A	B	A1	B1	A2	B2	M_2 Nm	n_2 min-1	P KW
MRFS16121UNL	60	Ø16	90	129	91	110	67,7	-	94	84	130	108	-	-	60	6,000	10
MRFS22121UNL	60	Ø22	90	129	91	114	67,7	-	94	84	130	108	-	-	60	6,000	10
MRFS27121UNL	60	Ø27	90	129	91	114	67,7	-	94	84	130	108	-	-	60	6,000	10

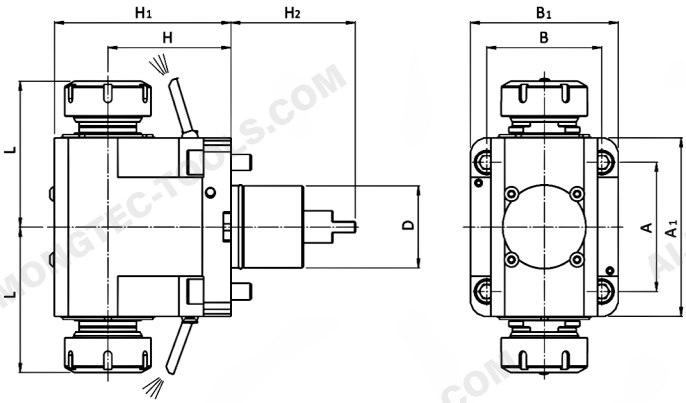

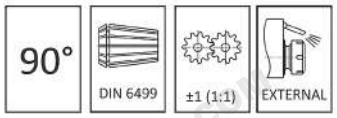

Code	D	ER	H	H1	H2	L (min-max)	L1	L2	A	B	A1	B1	A2	B2	M_2 Nm	n_2 min-1	P KW
MRTH32121UNL	60	32	90	129	91	100÷103,9	-	-	94	84	130	108	-	-	60	10,000	10
MRTH40121UNL	60	40	90	129	91	102,3÷106	–	-	94	84	130	108	-	-	60	10,000	10

Specifications and dimensions are for reference only and subject to change without notice. Please confirm the latest specifications before ordering.

Multi-spindle 90° Driven Tools

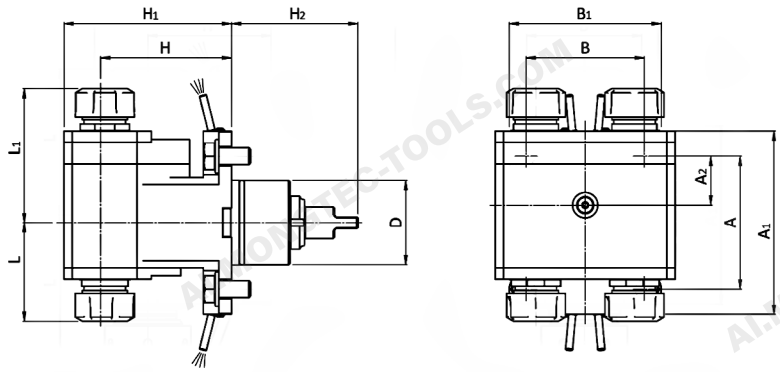

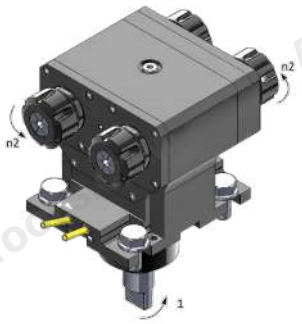

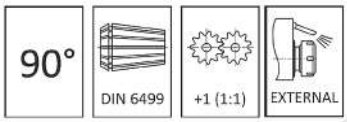

Code	D	ER	H	H1	H2	L (min-max)	L1 (min-max)	A	B	A1	B1	A2	B2	M_2 Nm	n_2 min-1	P KW
MRTY25121UNL	60	25	90	119	91	66,3÷70	91,3÷95	94	84	130	108	34,5	-	40	6,000	2,1

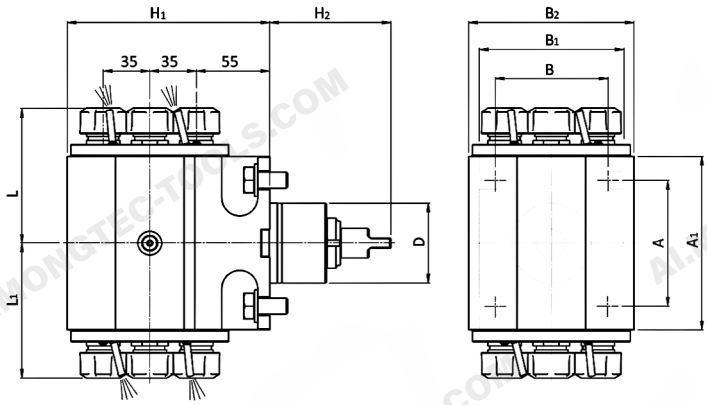

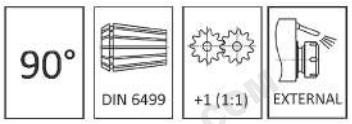

Code	D	ER	H	H1	H2	L (min-max)	L1 (min-max)	A	B	A1	B1	A2	B2	M_2 Nm	n_2 min-1	P KW
MRTQ20121UNL	60	20	-	-	-	97,3÷101	97,3÷101	94	84	130	108	-	124	20	6,000	1,1

Specifications and dimensions are for reference only and subject to change without notice. Please confirm the latest specifications before ordering.

Universal Driven Tools

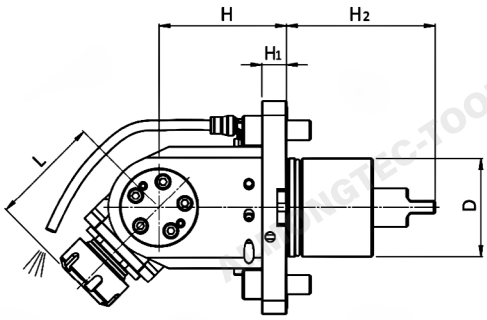

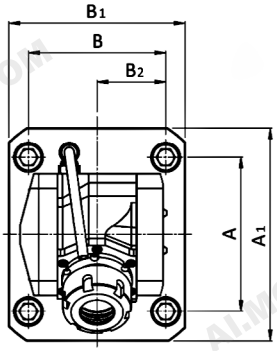

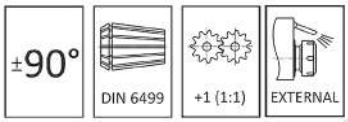

Code	D	ER	H	H1	H2	L (min-max)	L1	L2	A	B	A1	B1	A2	B2	M_2 Nm	n_2 min-1	P KW
MOH25121UNL	60	25	78	15	91	63,5÷67,2	-	-	94	84	130	108	-	42	25	10,000	4

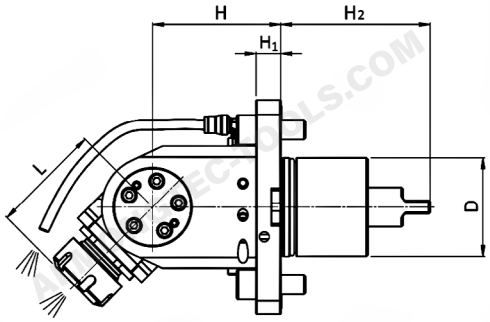

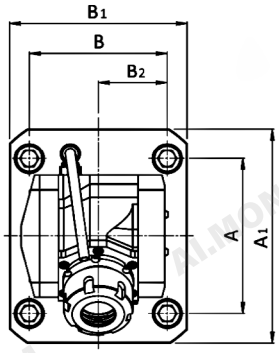

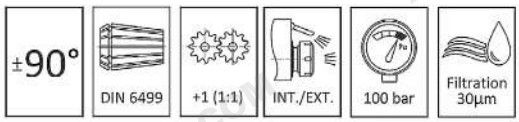

Code	D	ER	H	H1	H2	L (min-max)	L1	L2	A	B	A1	B1	A2	B2	M_2 Nm	n_2 min-1	P KW
MOH25131UNL	60	25	78	15	91	63,5÷67,2	-	-	94	84	130	108	-	42	25	10,000	4

Specifications and dimensions are for reference only and subject to change without notice. Please confirm the latest specifications before ordering.

Gear Hobbing Tool

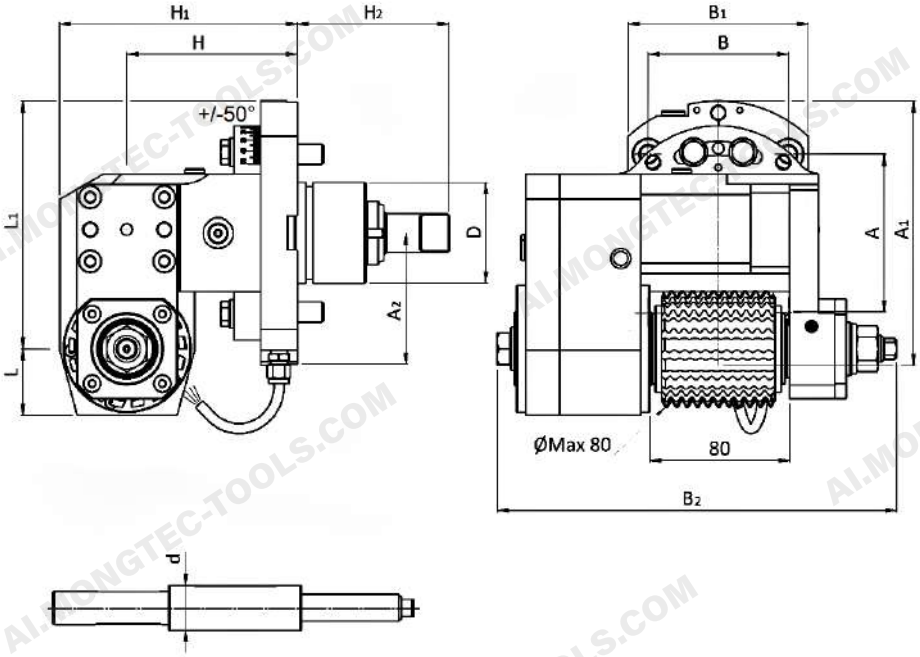

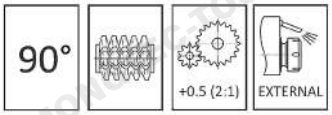

Code	D	d	H	H1	H2	L	L1	L2	A	B	A1	B1	A2	B2	M_2 Nm	n_2 min-1	P KW
MRCS16323UNL	60	Ø16	101,77	141,8	91	40	148	-	94	84	158	108	78,3	240	150	3,000	-
MRCS22323UNL	60	Ø22	101,77	141,8	91	40	148	-	94	84	158	108	78,3	240	150	3,000	-
MRCS27323UNL	60	Ø27	101,77	141,8	91	40	148	-	94	84	158	108	78,3	240	150	3,000	-
MRCS32323UNL	60	Ø32	101,77	141,8	91	40	148	-	94	84	158	108	78,3	240	150	3,000	-
MRCS0.75”323UNL	60	Ø0.75”	101,77	141,8	91	40	148	-	94	84	158	108	78,3	240	150	3,000	-
MRCS1”323UNL	60	Ø1”	101,77	141,8	91	40	148	-	94	84	158	108	78,3	240	150	3,000	-
MRCS1.25”323UNL	60	Ø1.25”	101,77	141,8	91	40	148	-	94	84	158	108	78,3	240	150	3,000	-

Specifications and dimensions are for reference only and subject to change without notice. Please confirm the latest specifications before ordering.

Multi-spindle 0° Driven Tools

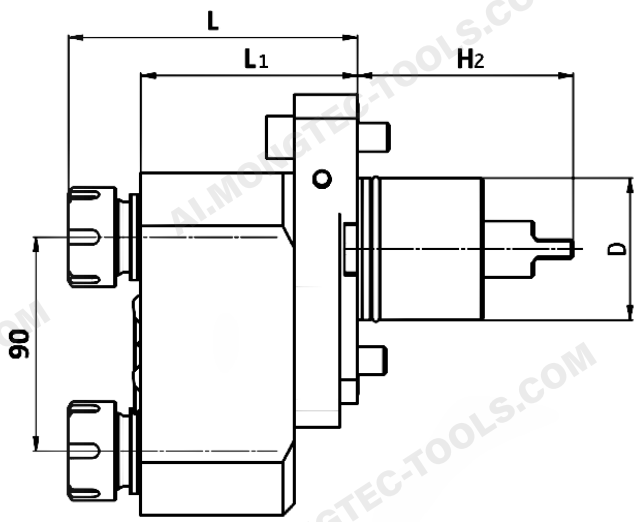

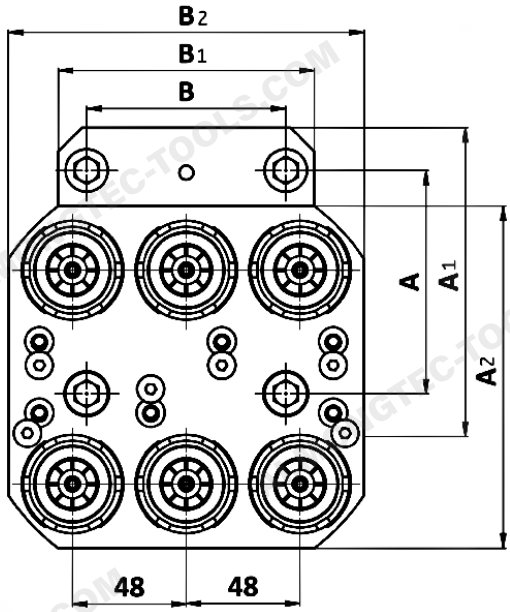

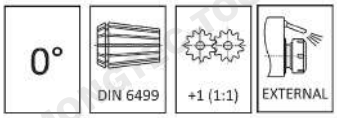

Code	D	ER	H	H1	H2	L	L1	L2	A	B	A1	B1	A2	B2	M_2 Nm	n_2 min-1	P KW
MA625121UNL	60	25	–	–	91	121.5	91	-	94	84	130	108	144	150	20	6,000	1,6

Specifications and dimensions are for reference only and subject to change without notice. Please confirm the latest specifications before ordering.

Inverted Driven Tool

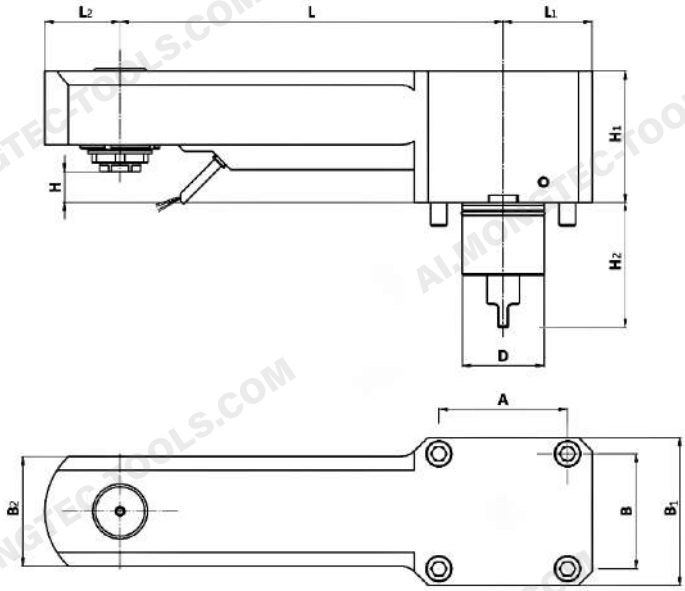

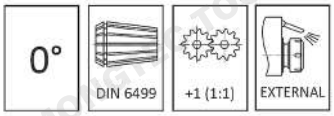

Code	D	ER	H	H1	H2	L	L1	L2	A	B	A1	B1	A2	B2	M_2 Nm	n_2 min-1	P KW
MADR25 121UNL280	60	25	29	96	91	280	65	40	94	84	-	108	-	80	-	5,000	-

Specifications and dimensions are for reference only and subject to change without notice. Please confirm the latest specifications before ordering.

Slitting Saw

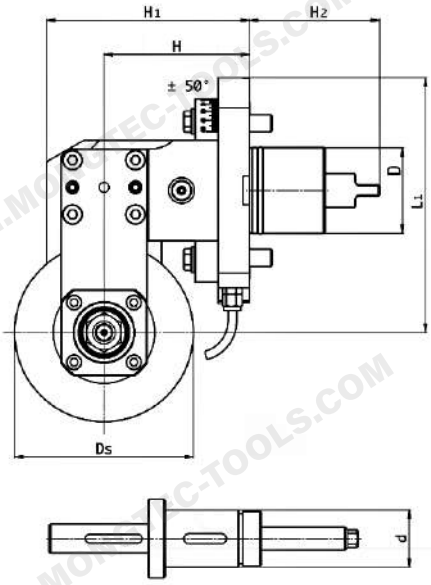

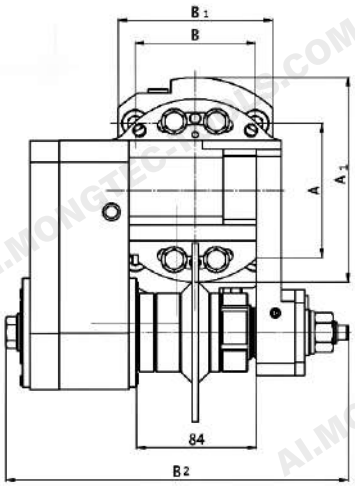

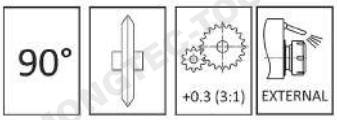

Code	D	d	Ds	H	H1	H2	L1	L2	A	B	A1	B1	A2	B2	M_2 Nm	n_2 min-1	P KW
MRLT40123UNL	60	40	125	90	142	91	165	-	94	84	130	108	-	212	150	2,000	-

Specifications and dimensions are for reference only and subject to change without notice. Please confirm the latest specifications before ordering.

Power Skiving

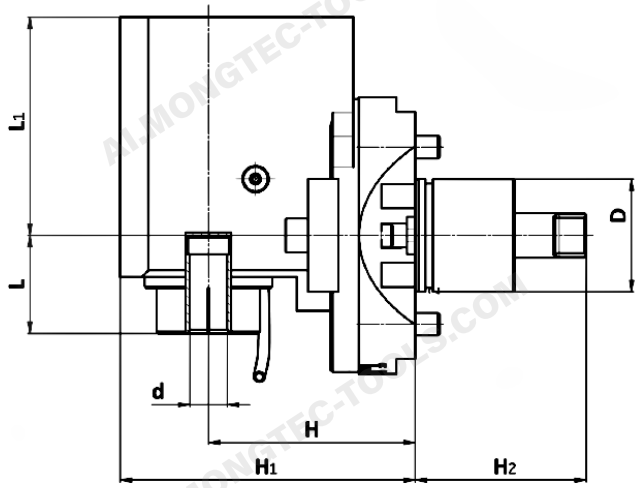

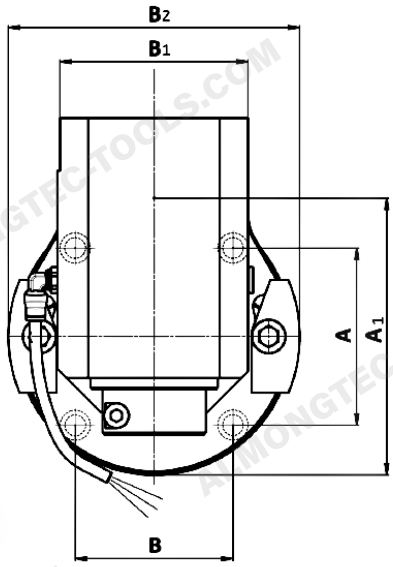

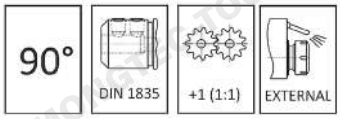

Code	D	d	H	H1	H2	L	L1	L2	A	B	A1	B1	A2	B2	M_2 Nm	n_2 min-1	P KW
MRSKA20321UNL	60	20	110	148	91	52	116	-	94	84	147	80	-	155	50	6,000	-

Specifications and dimensions are for reference only and subject to change without notice. Please confirm the latest specifications before ordering.

Static Toolholders

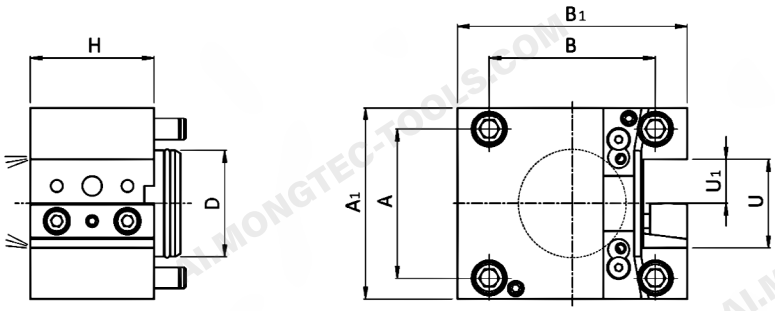

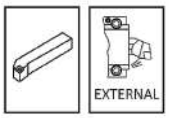

Code	DMG MORI Part. No.	D	U	U1	U2	H	H1	H2	H3	A	B	A1	B1	A2	B2	B3
ME10US20NLX70	T00187	60	40	20	-	70	-	-	-	84	94	108	130	-	-	-
ME10US25NLX70	T00186	60	50	25	-	70	-	-	-	84	94	108	130	-	-	-
ME10US0.75”NLX70	T00203	60	1.5”	0.75”	-	70	-	-	-	84	94	108	130	-	-	-
ME10US1”NLX70	T00202	60	2”	1”	-	70	-	-	-	84	94	108	130	-	-	-
ME10US25NLX90	T00385	60	50	25	-	90	-	-	-	84	94	108	130	-	-	-

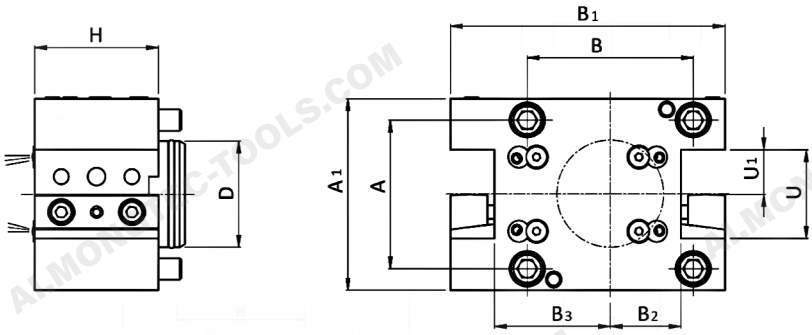

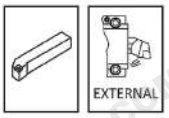

Code	DMG MORI Part. No.	D	U	U1	U2	H	H1	H2	H3	A	B	A1	B1	A2	B2	B3
ME10UD20NLX70	T00185	60	40	20	-	70	-	-	-	84	94	108	156	-	40	65,5
ME10UD25NLX70	T00184	60	50	25	-	70	-	-	-	84	94	108	155,5	-	40	65,5
ME10UD0.75”NLX70	T00201	60	1.5”	0.75”	-	70	-	-	-	84	94	108	156	-	40	65,5
ME10UD1”NLX70	T00199	60	2”	1”	-	70	-	-	-	84	94	108	156	-	40	65,5

Specifications and dimensions are for reference only and subject to change without notice. Please confirm the latest specifications before ordering.

Static Toolholders

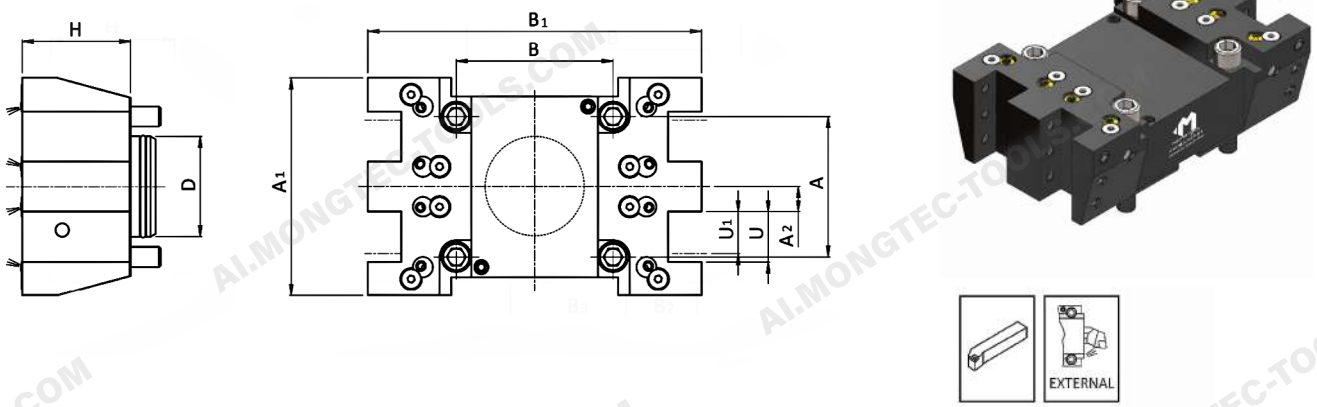

Code	DMG MORI Part. No.	D	U	U1	U2	H	H1	H2	H3	A	B	A1	B1	A2	B2	B3
ME10UQ25NLX65	T00253	60	30	25	-	65	-	-	-	84	94	130	200	15	-	-

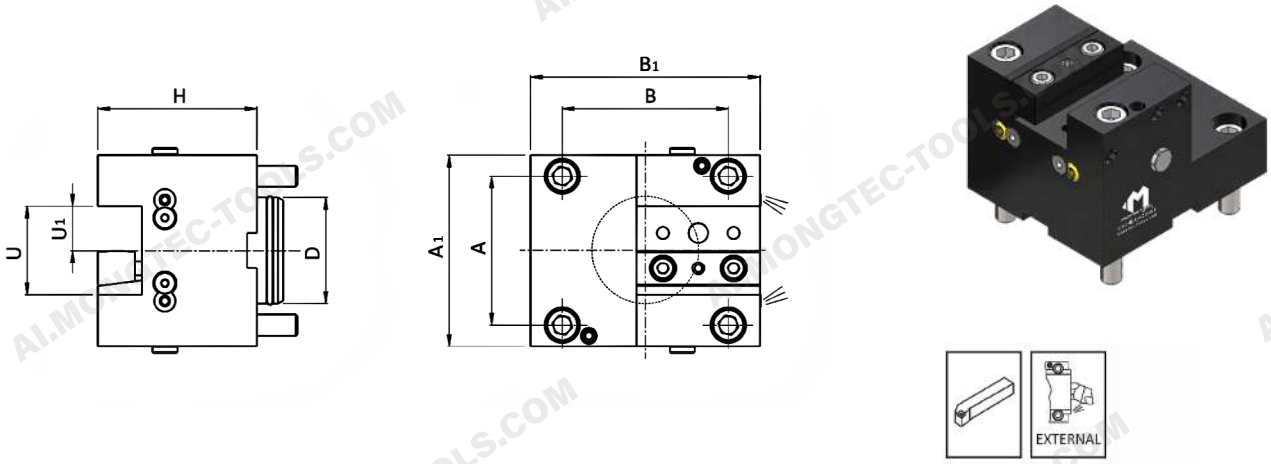

Code	DMG MORI Part. No.	D	U	U1	U2	H	H1	H2	H3	A	B	A1	B1	A2	B2	B3
ME10UA20NLX70	T03006	60	40	20	-	70	-	-	-	84	94	108	130	-	-	-
ME10UA25NLX90	T03005	60	50	25	-	90	-	-	-	84	94	108	130	-	-	-
ME10UA0.75”NLX70	T03014	60	1.5”	0.75”	-	70	-	-	-	84	94	108	130	-	-	-
ME10UA1”NLX90	T03013	60	2”	1”	-	90	-	-	-	84	94	108	130	-	-	-

Specifications and dimensions are for reference only and subject to change without notice. Please confirm the latest specifications before ordering.

Static Toolholders

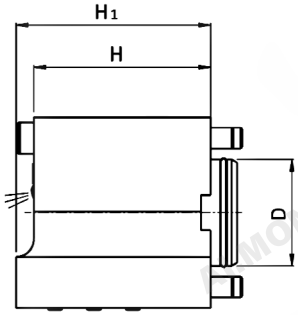

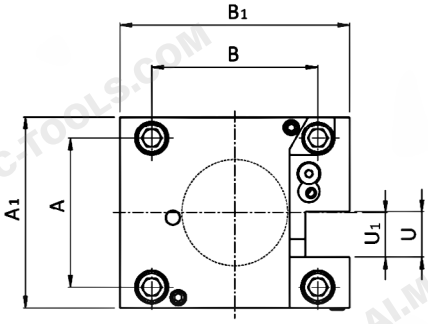

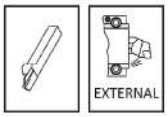

Code	DMG MORI Part. No.	D	U	U1	U2	H	H1	H2	H3	A	B	A1	B1	A2	B2	B3
ME10UT25NLX110	T00197	60	26	25	-	100	110	-	-	84	94	108	130	-	-	-
ME10UT1”NLX110	T00198	60	26	1”	-	100	110	-	-	84	94	108	130	-	-	-

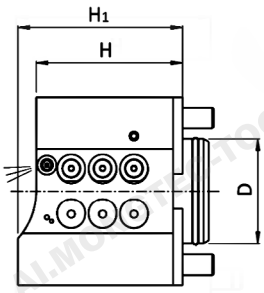

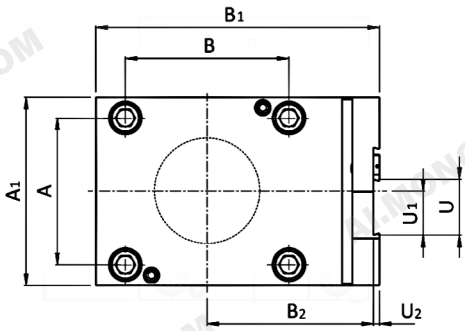

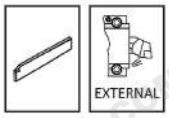

Code	DMG MORI Part. No.	D	U	U1	U2	H	H1	H2	H3	A	B	A1	B1	A2	B2	B3
ME10TT32NL	-	60	32	25	2,36	84,1	94,6	-	-	84	94	108	163	-	95,5	-

Specifications and dimensions are for reference only and subject to change without notice. Please confirm the latest specifications before ordering.

Static Toolholders

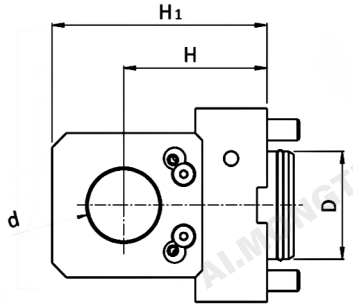

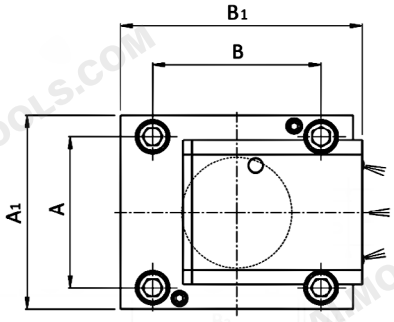

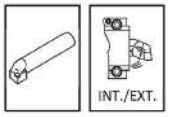

Code	DMG MORI Part. No.	D	d	d1	d2	H	H1	H2	H3	A	B	A1	B1	A2	B2	B3
ME10BS40NLX80	T10097 - T13128	60	Ø40	-	-	80	120	-	-	84	94	108	135	-	-	-
ME10BS50NLX80	T10098 - T13139	60	Ø50	-	-	80	120	-	-	84	94	108	135	-	-	-
ME10BS1.5”NLX80	T10101 - T13130	60	Ø1.5”	-	-	80	120	-	-	84	94	108	135	-	-	-
ME10BS2”NLX80	T10102 - T13140	60	Ø2	-	-	80	120	-	-	84	94	108	135	-	-	-
ME10BS2.5”NLX80	-	60	Ø2.5”	-	-	80	126	-	-	84	94	108	140	-	-	-
ME10BS40NLX100	T10181	60	Ø40	-	-	100	140	-	-	84	94	108	140	-	-	-
ME10BS1.5”NLX100	T10195	60	Ø1.5”	-	-	100	140	-	-	84	94	108	140	-	-	-
ME10BS40NLX120	T10113 - T13131	60	Ø40	-	-	120	154	-	-	84	94	108	135	-	-	-
ME10BS50NLX120	T10114	60	Ø50	-	-	120	154	-	-	84	94	108	135	-	-	-
ME10BS1.5”NLX120	T10134 - T13137	60	Ø1.5”	-	-	120	154	-	-	84	94	108	135	-	-	-
ME10BS2”NLX120	T10135	60	Ø2”	-	-	120	154	-	-	84	94	108	135	-	-	-

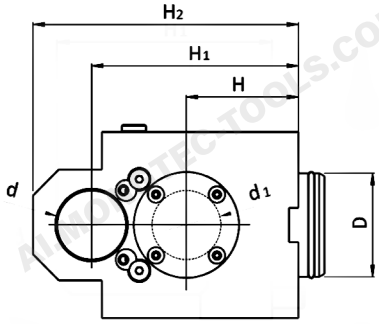

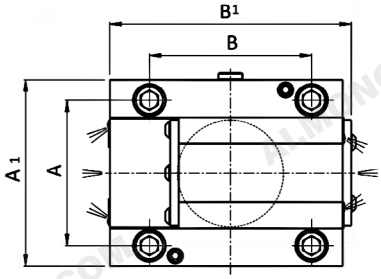

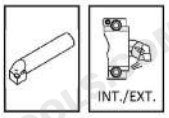

Code	DMG MORI Part. No.	D	d	d1	d2	H	H1	H2	H3	A	B	A1	B1	A2	B2	B3
ME10BD32NLX80125	T10096	60	Ø 32	Ø 32	-	80	125	154	-	84	94	108	140	-	-	-
ME10BD40NLX65120	-	60	Ø 40	Ø 40	-	65	120	154	-	84	94	108	140	-	-	-
ME10BD1.25” NLX80125	T10100	60	Ø 1.25”	Ø 1.25”	-	80	125	154	-	84	94	108	140	-	-	-
ME10BD1.5” NLX65120	-	60	Ø 1.5”	Ø 1.5”	-	65	120	154	-	84	94	108	140	-	-	-

Specifications and dimensions are for reference only and subject to change without notice. Please confirm the latest specifications before ordering.

Static Toolholders

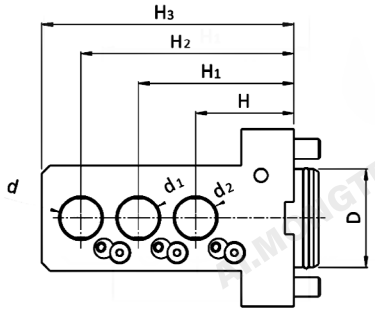

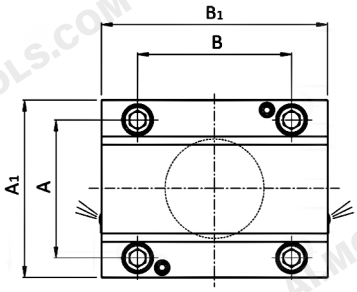

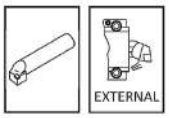

Code	DMG MORI Part. No.	D	d	d1	d2	H	H1	H2	H3	A	B	A1	B1	A2	B2	B3
ME10B325NLX6095130	-	60	Ø25	Ø25	Ø25	60	95	130	154	84	94	108	138	-	-	-

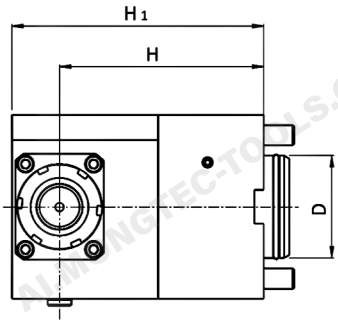

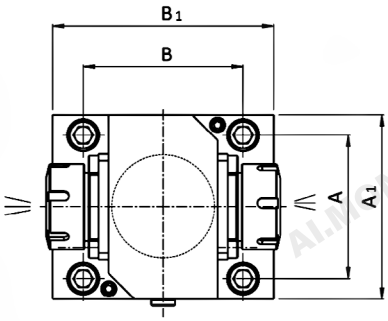

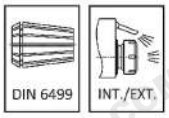

Code	DMG MORI Part. No.	D	ER	d1	d2	H	H1	H2	H3	A	B	A1	B1	A2	B2	B3
ME10ER32DNL	-	60	32	-	-	120	184	-	-	84	94	108	130	-	-	-

Specifications and dimensions are for reference only and subject to change without notice. Please confirm the latest specifications before ordering.

Facebook WeChat YouTube Mongtec Web LINE WhatsApp

Mongtec Precision Inc.

TEL : +886-4-22653360

FAX : +886-4-22653386

E-mail : info@mongtec.com

No. 87, Sec. 1, Daqing St., South Dist., Taichung City 402024, Taiwan (R.O.C.)

Ver. 2026.09