MONGTEC®
CNC職人のこだわり

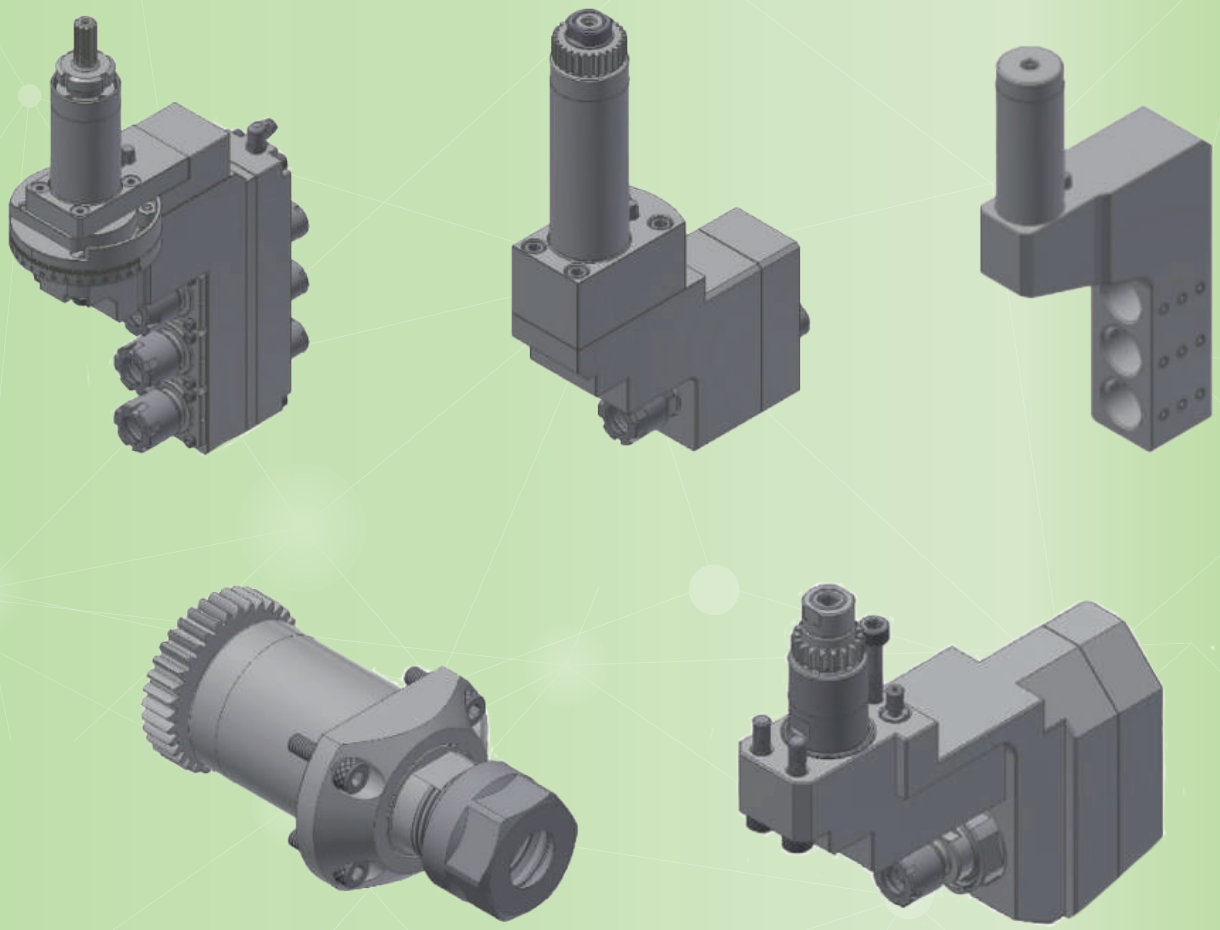

# HANWHA
# Swiss Type Toolholders

ai.mongtec-tools.com | mongtec-tools.com | info@mongtec.com

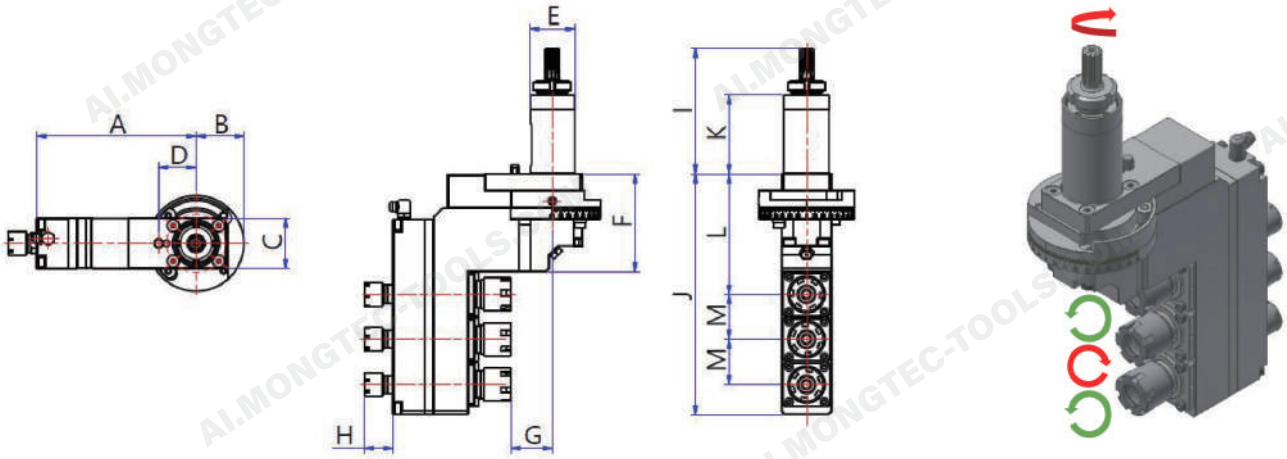


| 180-Degree Axial Live Tool Holder | | | |
|---|---|---|---|
| **Model** | XD20H-16230 | **HANWHA Part No.** | - |
| **Gear Ratio** | 1 / 1 | **Max. Speed** | 6000 rpm |
| **Max. Collet Dia.** | 10mm / 7mm | **Angle Range** | ± 90° |
| **Collet** | Main Spindle: AR16-M, ER16-M<br>Sub Spindle: AR11-M, ER11-M | | |
| **Compatible Machines** | XD12II/XD16II/XD12III/XD16III/XD20/XD26/ XD20V/XD20M | | |

| Model | A | B | C | D | E | F | G | H | I | J | K | L | M |
|---|---|---|---|---|---|---|---|---|---|---|---|---|---|
| XD20H-16230 | 106 | 32 | 33.5 | 25 | Ø30 | 65 | 27.5 | 19.2 | 83.7 | 160 | 52.5 | 80 | 30 |

Unit: mm

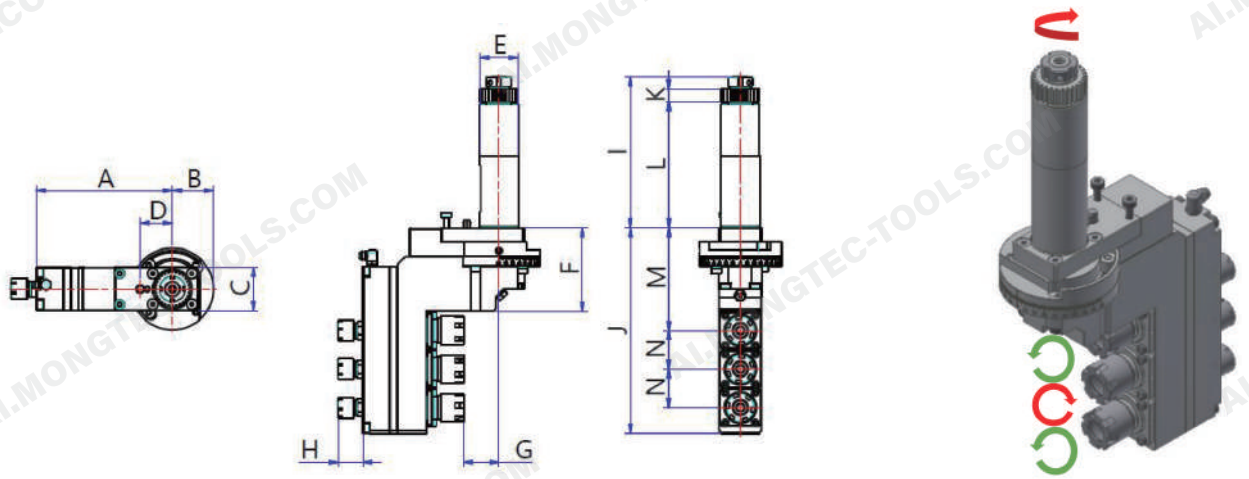


| 180-Degree Axial Live Tool Holder | | | |
|---|---|---|---|
| **Model** | XD20HII-16230 | **HANWHA Part No.** | - |
| **Gear Ratio** | 1 / 1 | **Max. Speed** | 6000 rpm |
| **Max. Collet Dia.** | 10mm / 7mm | **Angle Range** | ± 90° |
| **Collet** | Main Spindle: AR16-M, ER16-M<br>Sub Spindle: AR11-M, ER11-M | | |
| **Compatible Machines** | XD20II/XD26II/XE20/XE26 | | |

| Model | A | B | C | D | E | F | G | H | I | J | K | L | M | N |
|---|---|---|---|---|---|---|---|---|---|---|---|---|---|---|
| XD20HII-16230 | 106 | 32 | 33.5 | 25 | Ø30 | 65 | 27.5 | 19.2 | 117.5 | 160 | 10 | 98 | 80 | 30 |

Unit: mm

Specifications and dimensions are for reference only and subject to change without notice. Please confirm the latest specifications before ordering.

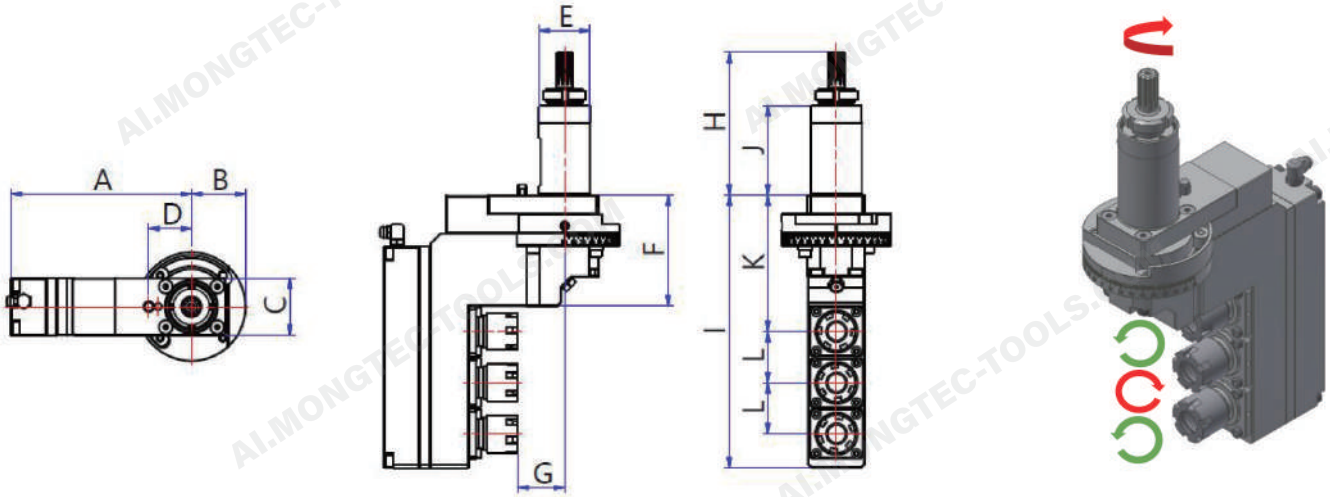


| 180-Degree Axial Live Tool Holder | | | |
|---|---|---|---|
| **Model** | XD20H-16330 | **HANWHA Part No.** | - |
| **Gear Ratio** | 1 / 1 | **Max. Speed** | 6000 rpm |
| **Max. Collet Dia.** | 10 mm | **Angle Range** | ± 90° |
| **Collet** | Main Spindle: AR16-M, ER16-M | | |
| **Compatible Machines** | XD12II/XD16II/XD12III/XD16III/ XD20H/XD26H/XD20V/XD20M | | |

| Model | A | B | C | D | E | F | G | H | I | J | K | L |
|---|---|---|---|---|---|---|---|---|---|---|---|---|
| XD20H-16330 | 106 | 32 | 33.5 | 25 | Ø30 | 65 | 27.5 | 83.7 | 160 | 52.5 | 80 | 30 |

Unit: mm

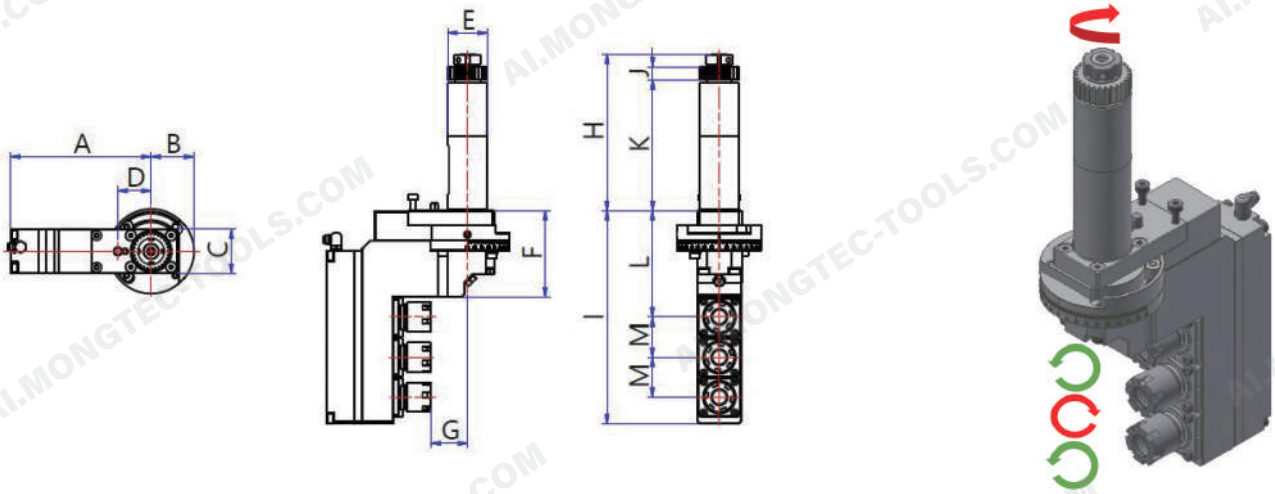


| 180-Degree Axial Live Tool Holder | | | |
|---|---|---|---|
| **Model** | XD20HII-16330 | **HANWHA Part No.** | - |
| **Gear Ratio** | 1 / 1 | **Max. Speed** | 6000 rpm |
| **Max. Collet Dia.** | 10 mm | **Angle Range** | ± 90° |
| **Collet** | Main Spindle: AR16-M, ER16-M | | |
| **Compatible Machines** | XD20II/XD26II/XE20/XE26 | | |

| Model | A | B | C | D | E | F | G | H | I | J | K | L | M |
|---|---|---|---|---|---|---|---|---|---|---|---|---|---|
| XD20HII-16330 | 106 | 32 | 33.5 | 25 | Ø30 | 65 | 27.5 | 117.5 | 160 | 10 | 98 | 80 | 30 |

Unit: mm

Specifications and dimensions are for reference only and subject to change without notice. Please confirm the latest specifications before ordering.

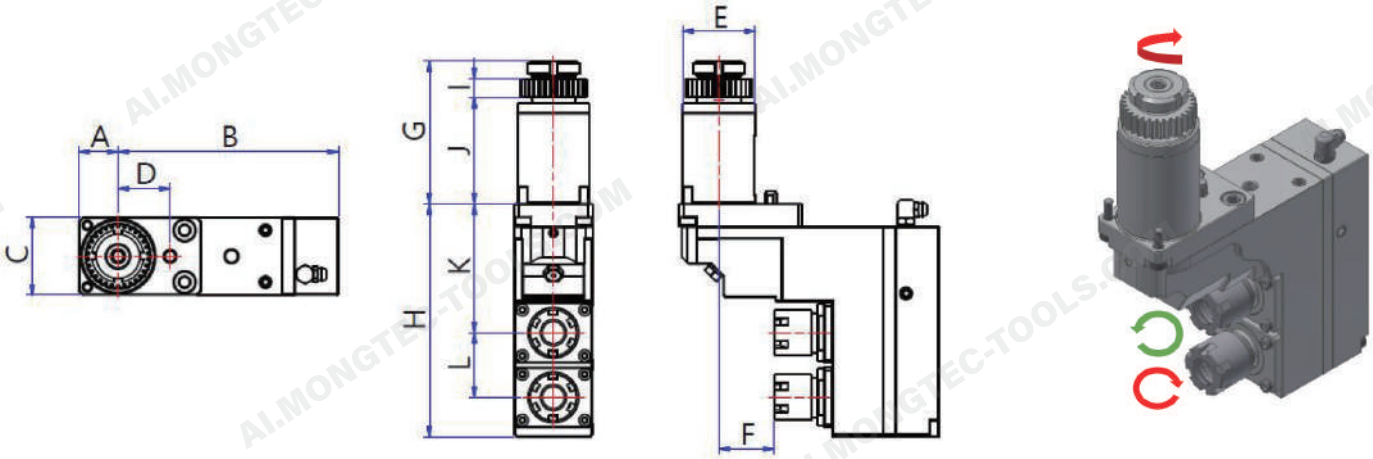


| Dual-Spindle Axial Live Tool Holder | | | |
|---|---|---|---|
| **Model** | XDI20-10120 | **HANWHA Part No.** | - |
| **Gear Ratio** | 1 / 1 | **Max. Speed** | 6000 rpm |
| **Max. Collet Dia.** | 10 mm | | |
| **Collet** | Main Spindle: AR16-M, ER16-M | | |
| **Compatible Machines** | XDI20 | | |

| Model | A | B | C | D | E | F | G | H | I | J | K | L |
|---|---|---|---|---|---|---|---|---|---|---|---|---|
| XDI20-10120 | 19 | 106 | 37.5 | 25 | Ø35 | 26.5 | 68.5 | 112 | 9 | 51 | 62 | 31 |

Unit: mm

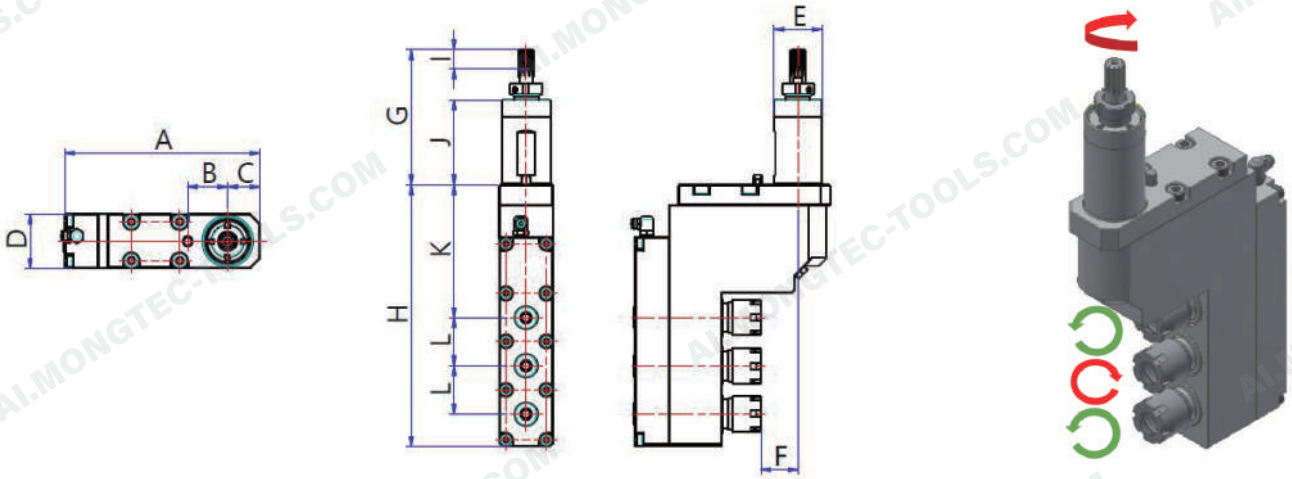


| Axial Live Tool Holder | | | |
|---|---|---|---|
| **Model** | XD20H-10130 | **HANWHA Part No.** | - |
| **Gear Ratio** | 1 / 1 | **Max. Speed** | 6000 rpm |
| **Max. Collet Dia.** | 10 mm | | |
| **Collet** | Main Spindle: AR16-M, ER16-M | | |
| **Compatible Machines** | XD12II/XD16II/XD12III/XD16III/XD20H/ XD26H/XD20V/XD20M | | |

| Model | A | B | C | D | E | F | G | H | I | J | K | L |
|---|---|---|---|---|---|---|---|---|---|---|---|---|
| XD20H-10130 | 121.5 | 25 | 20 | 33.5 | Ø30 | 23 | 84 | 162.5 | 12 | 52.5 | 82.5 | 30 |

Unit: mm

Specifications and dimensions are for reference only and subject to change without notice. Please confirm the latest specifications before ordering.

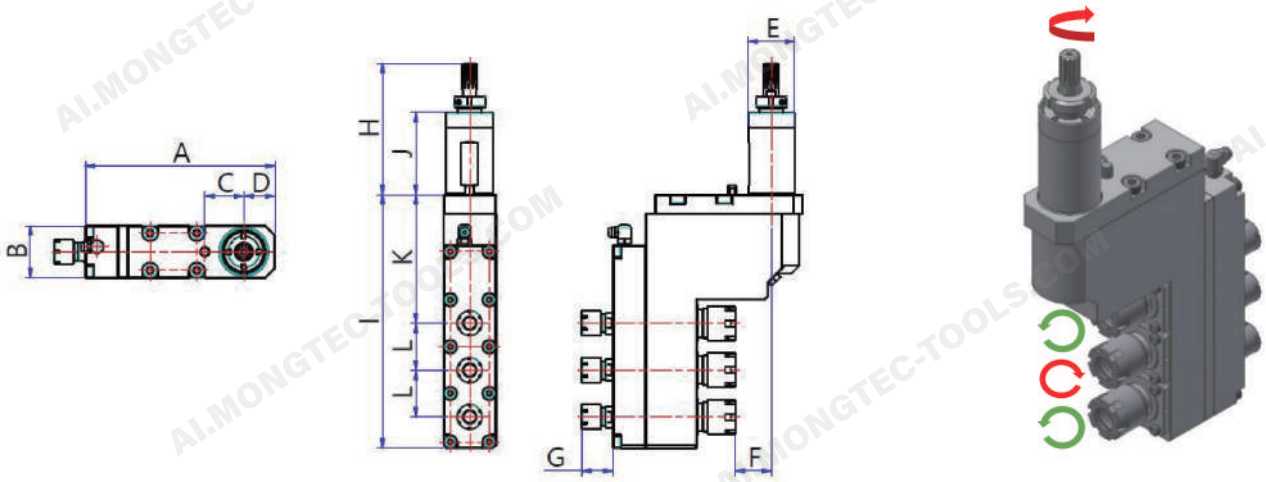


| Axial Live Tool Holder | | | |
|---|---|---|---|
| **Model** | XD20H-11130 | **HANWHA Part No.** | - |
| **Gear Ratio** | 1 / 1 | **Max. Speed** | 6000 rpm |
| **Max. Collet Dia.** | 10mm / 7mm | | |
| **Collet** | Main Spindle: AR16-M, ER16-M<br>Sub Spindle: AR11-M, ER11-M | | |
| **Compatible Machines** | XD12II/XD16II/XD12III/XD16III/XD20H/ XD26H/XD20V/XD20M | | |

| Model | A | B | C | D | E | F | G | H | I | J | K | L |
|---|---|---|---|---|---|---|---|---|---|---|---|---|
| XD20H-11130 | 121.5 | 33.5 | 25 | 20 | Ø30 | 23 | 19.7 | 84 | 162.5 | 52.5 | 82.5 | 30 |

Unit: mm

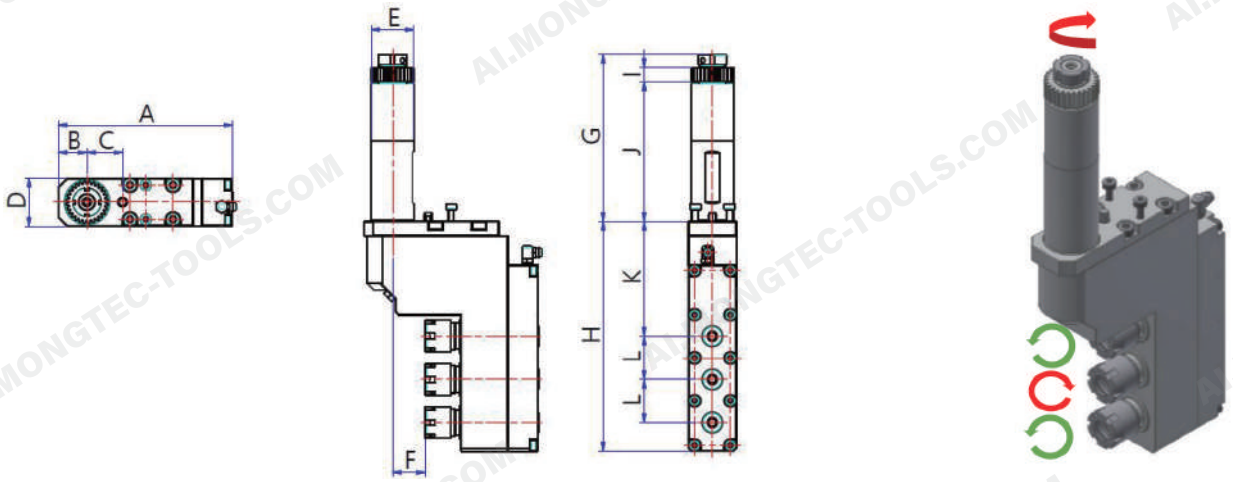


| Axial Live Tool Holder | | | |
|---|---|---|---|
| **Model** | XD20HII-10130 | **HANWHA Part No.** | - |
| **Gear Ratio** | 1 / 1 | **Max. Speed** | 6000 rpm |
| **Max. Collet Dia.** | 10 mm | | |
| **Collet** | Main Spindle: AR16-M, ER16-M | | |
| **Compatible Machines** | XD20II/XD26II/XE20/XE26 | | |

| Model | A | B | C | D | E | F | G | H | I | J | K | L |
|---|---|---|---|---|---|---|---|---|---|---|---|---|
| XD20HII-10130 | 121.5 | 20 | 25 | 33.5 | Ø30 | 23 | 116 | 160 | 10 | 97 | 80 | 30 |

Unit: mm

Specifications and dimensions are for reference only and subject to change without notice. Please confirm the latest specifications before ordering.

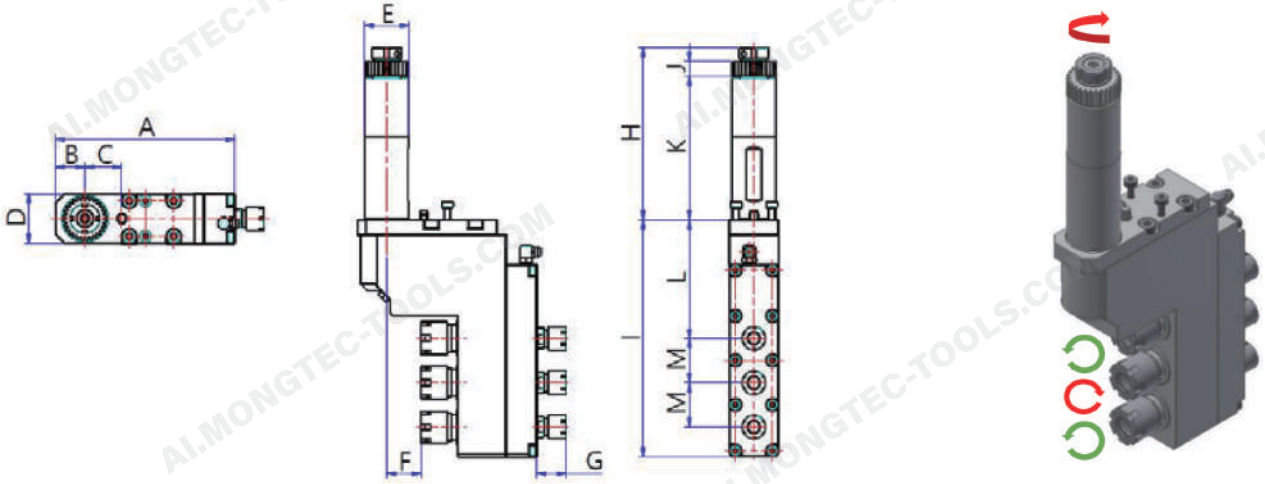


| Axial Live Tool Holder | | | |
|---|---|---|---|
| **Model** | XD20HII-11130 | **HANWHA Part No.** | - |
| **Gear Ratio** | 1 / 1 | **Max. Speed** | 6000 rpm |
| **Max. Collet Dia.** | 10 mm / 7mm | | |
| **Collet** | Main Spindle: AR16-M, ER16-M<br>Sub Spindle: AR11-M, ER11-M | | |
| **Compatible Machines** | XD20II/XD26II/XE20/XE26 | | |

| Model | A | B | C | D | E | F | G | H | I | J | K | L | M |
|---|---|---|---|---|---|---|---|---|---|---|---|---|---|
| XD20HII-11130 | 121.5 | 20 | 25 | 33.5 | Ø30 | 23 | 19.7 | 116 | 160 | 10 | 97 | 80 | 30 |

Unit: mm

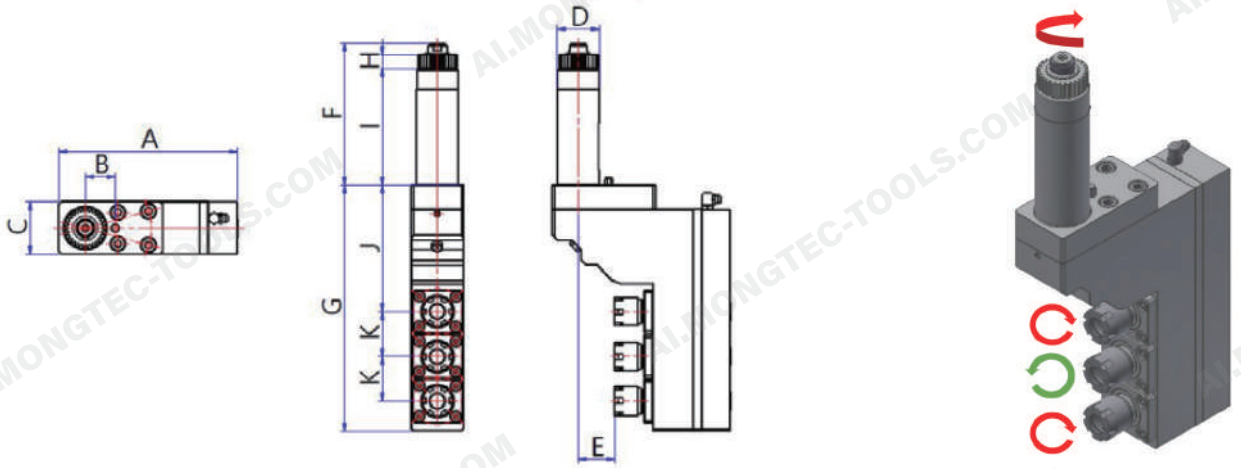


| Axial Live Tool Holder | | | |
|---|---|---|---|
| **Model** | XD32H-10130 | **HANWHA Part No.** | - |
| **Gear Ratio** | 1 / 1 | **Max. Speed** | 6000 rpm |
| **Max. Collet Dia.** | 10 mm | | |
| **Collet** | Main Spindle: AR16-M, ER16-M | | |
| **Compatible Machines** | XD32H, XD35H, XD38H | | |

| Model | A | B | C | D | E | F | G | H | I | J | K |
|---|---|---|---|---|---|---|---|---|---|---|---|
| XD32H-10130 | 136 | 23 | 40 | Ø32 | 27.5 | 108 | 187 | 10 | 89 | 96 | 34 |

Unit: mm

Specifications and dimensions are for reference only and subject to change without notice. Please confirm the latest specifications before ordering.

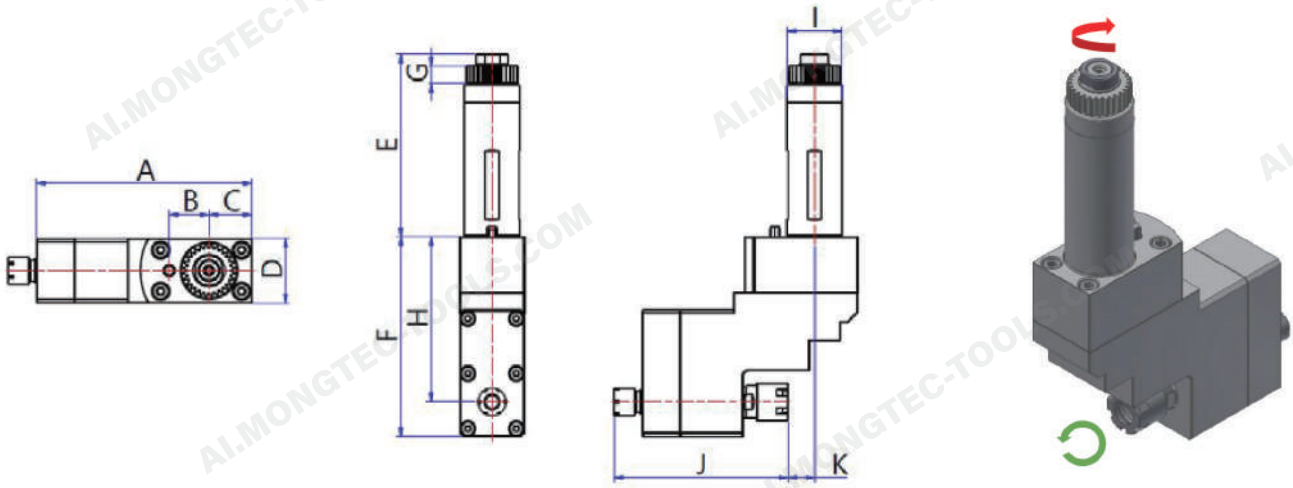


| Axial Live Tool Holder | | | |
|---|---|---|---|
| **Model** | XD32H-11110A | **HANWHA Part No.** | - |
| **Gear Ratio** | 1 / 1 | **Max. Speed** | 6000 rpm |
| **Max. Collet Dia.** | 10 mm / 7mm | | |
| **Collet** | Main Spindle: AR16-M, ER16-M,<br>Sub Spindle: AR11-M, ER11-M | | |
| **Compatible Machines** | XD32H/XD35H/XD38H | | |

| Model | A | B | C | D | E | F | G | H | I | J | K |
|---|---|---|---|---|---|---|---|---|---|---|---|
| XD32H-11110A | 125 | 23 | 25 | 37.5 | 106 | 116 | 10 | 96 | Ø32 | 101 | 15.5 |

Unit: mm

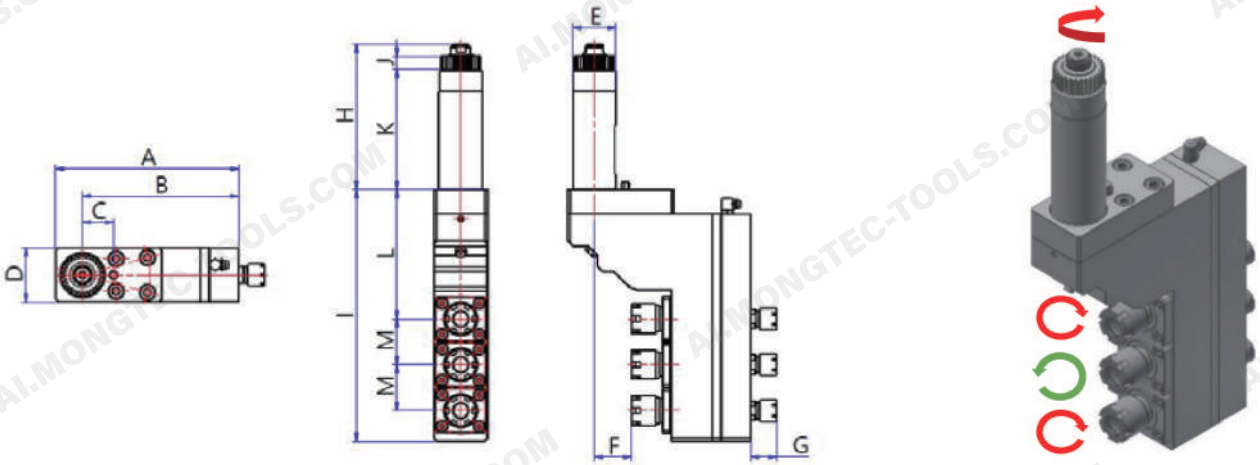


| Axial Live Tool Holder | | | |
|---|---|---|---|
| **Model** | XD32H-11130 | **HANWHA Part No.** | - |
| **Gear Ratio** | 1 / 1 | **Max. Speed** | 6000 rpm |
| **Max. Collet Dia.** | 10 mm / 7mm | | |
| **Collet** | Main Spindle: AR16-M, ER16-M,<br>Sub Spindle: AR11-M, ER11-M | | |
| **Compatible Machines** | XD32/XD35/XD38/XD32II/XD38II | | |

| Model | A | B | C | D | E | F | G | H | I | J | K | L | M |
|---|---|---|---|---|---|---|---|---|---|---|---|---|---|
| XD32H-11130 | 136 | 116 | 23 | 40 | Ø32 | 27.5 | 19.2 | 108 | 187 | 10 | 89 | 96 | 34 |

Unit: mm

Specifications and dimensions are for reference only and subject to change without notice. Please confirm the latest specifications before ordering.

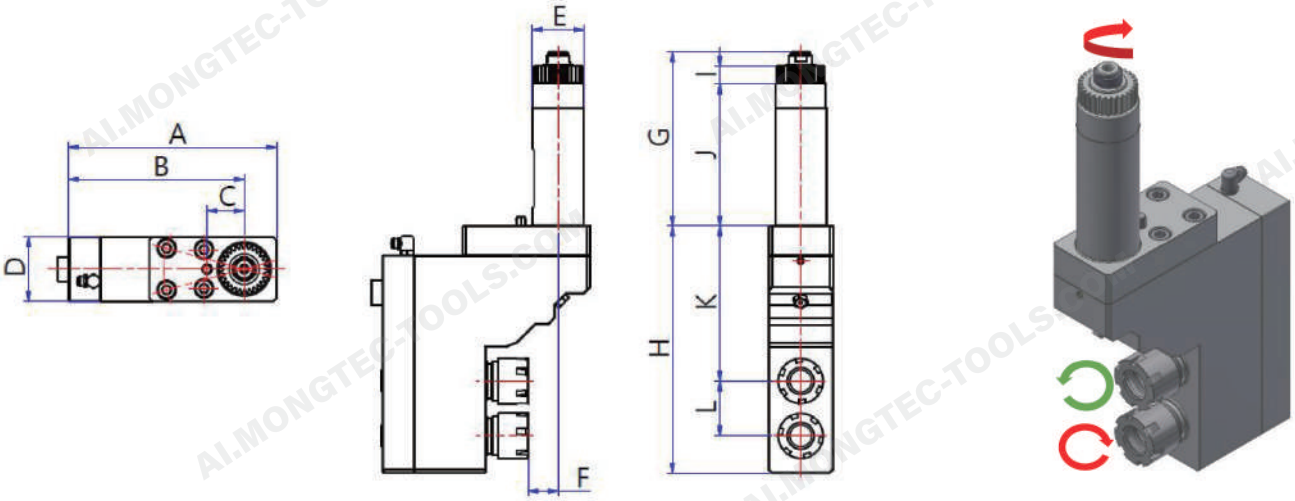


| Axial Live Tool Holder | | | |
|---|---|---|---|
| **Model** | XD38HII-10120 | **HANWHA Part No.** | - |
| **Gear Ratio** | 1 / 1 | **Max. Speed** | 6000 rpm |
| **Max. Collet Dia.** | 13 mm | | |
| **Collet** | Main Spindle: AR20-M, ER20-M | | |
| **Compatible Machines** | XD32/XD35/XD38/XD32II/XD38II | | |

| Model | A | B | C | D | E | F | G | H | I | J | K | L |
|---|---|---|---|---|---|---|---|---|---|---|---|---|
| XD38HII-10120 | 129.1 | 109.1 | 23 | 40 | Ø32 | 18.5 | 108 | 153 | 11 | 88 | 96 | 34 |

Unit: mm

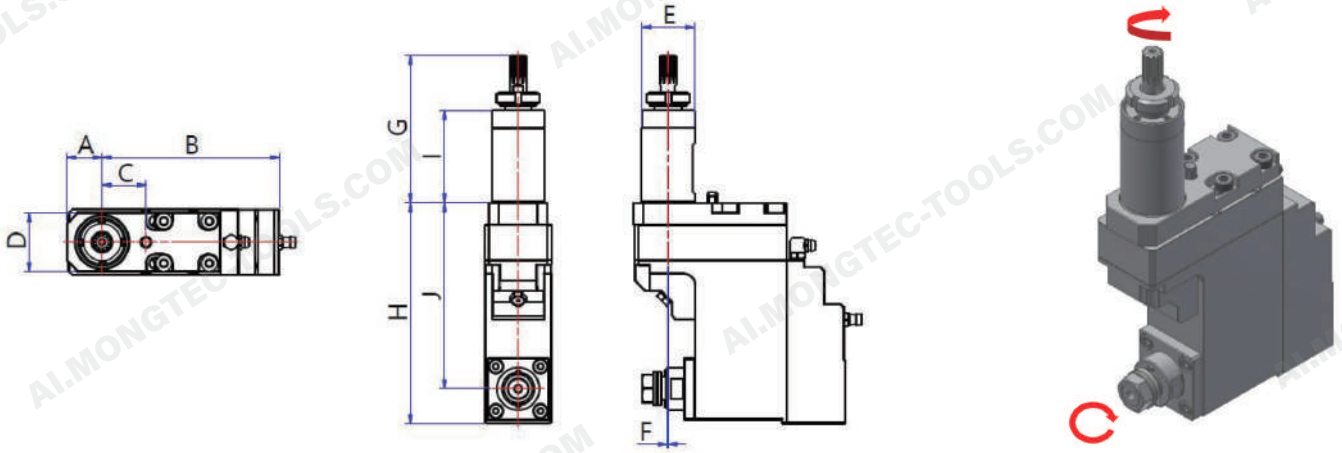


| Polygon Milling Tool Holder | | | |
|---|---|---|---|
| **Model** | XD20H-10810 | **HANWHA Part No.** | - |
| **Gear Ratio** | 1: 0.6 | **Max. Speed** | 6000 rpm |
| **Insert Shaft O.D.** | Ø13 mm | | |
| **Compatible Machines** | XD12II/XD16II/XD12III/XD16III/XD20/XD26/ XD20V/XD20M | | |

| Model | A | B | C | D | E | F | G | H | I | J |
|---|---|---|---|---|---|---|---|---|---|---|
| XD20H-10810 | 20 | 101 | 25 | 33.5 | Ø30 | 0.6 | 84 | 125.75 | 52.5 | 105.75 |

Unit: mm

Specifications and dimensions are for reference only and subject to change without notice. Please confirm the latest specifications before ordering.

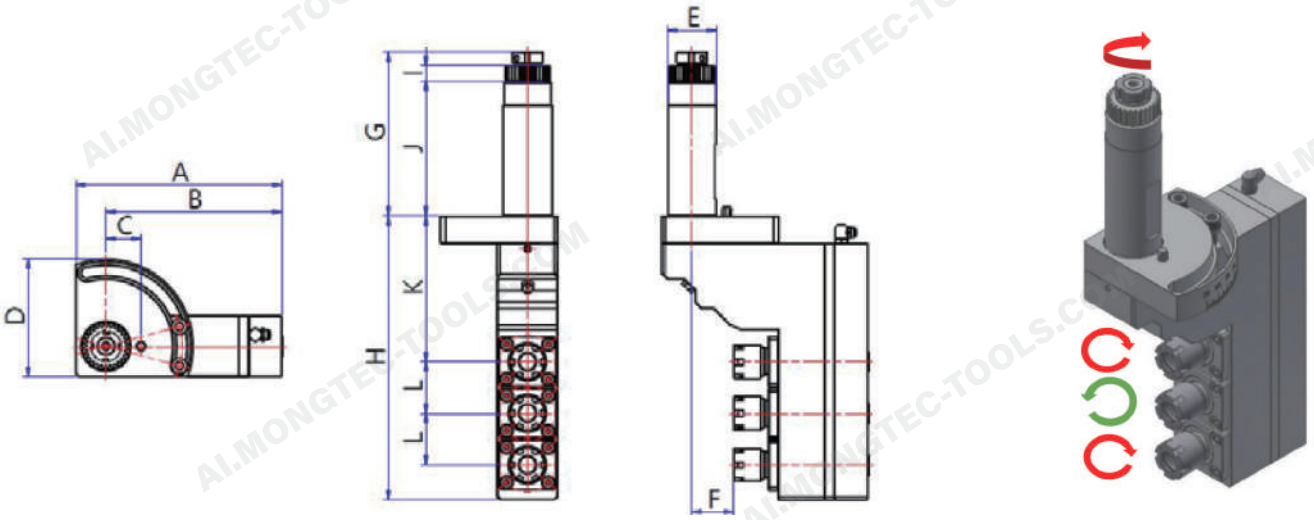


| Adjustable-Angle Axial Live Tool Holder | | | |
|---|---|---|---|
| **Model** | XD32H-15030 | **HANWHA Part No.** | - |
| **Gear Ratio** | 1 / 1 | **Max. Speed** | 6000 rpm |
| **Max. Collet Dia.** | 10 mm | **Angle Range** | 0°~90° |
| **Collet** | Main Spindle: AR16-M, ER16-M | | |
| **Compatible Machines** | XD32/XD35/XD38/XD32II/XD38II | | |

| Model | A | B | C | D | E | F | G | H | I | J | K | L |
|---|---|---|---|---|---|---|---|---|---|---|---|---|
| XD32H-15030 | 136 | 116 | 23 | 77.5 | Ø32 | 27.5 | 108 | 187 | 10 | 89 | 96 | 34 |

Unit: mm

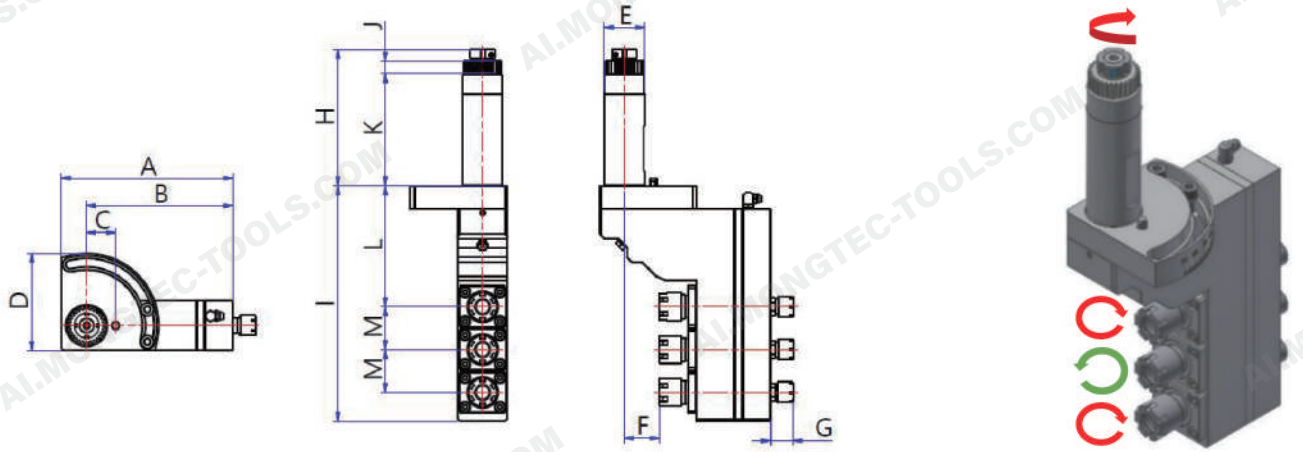


| Adjustable-Angle Axial Live Tool Holder | | | |
|---|---|---|---|
| **Model** | XD32H-15130 | **HANWHA Part No.** | - |
| **Gear Ratio** | 1 / 1 | **Max. Speed** | 6000 rpm |
| **Max. Collet Dia.** | 10 mm / 7mm | **Angle Range** | 0 ~ 90° |
| **Collet** | Main Spindle: AR16-M, ER16-M<br>Sub Spindle: AR11-M, ER11-M | | |
| **Compatible Machines** | XD32/XD35/XD38/XD32II/XD38II | | |

| Model | A | B | C | D | E | F | G | H | I | J | K | L | M |
|---|---|---|---|---|---|---|---|---|---|---|---|---|---|
| XD32H-15130 | 136 | 116 | 23 | 77.5 | Ø32 | 27.5 | 17.9 | 108 | 187 | 10 | 89 | 96 | 34 |

Unit: mm

Specifications and dimensions are for reference only and subject to change without notice. Please confirm the latest specifications before ordering.

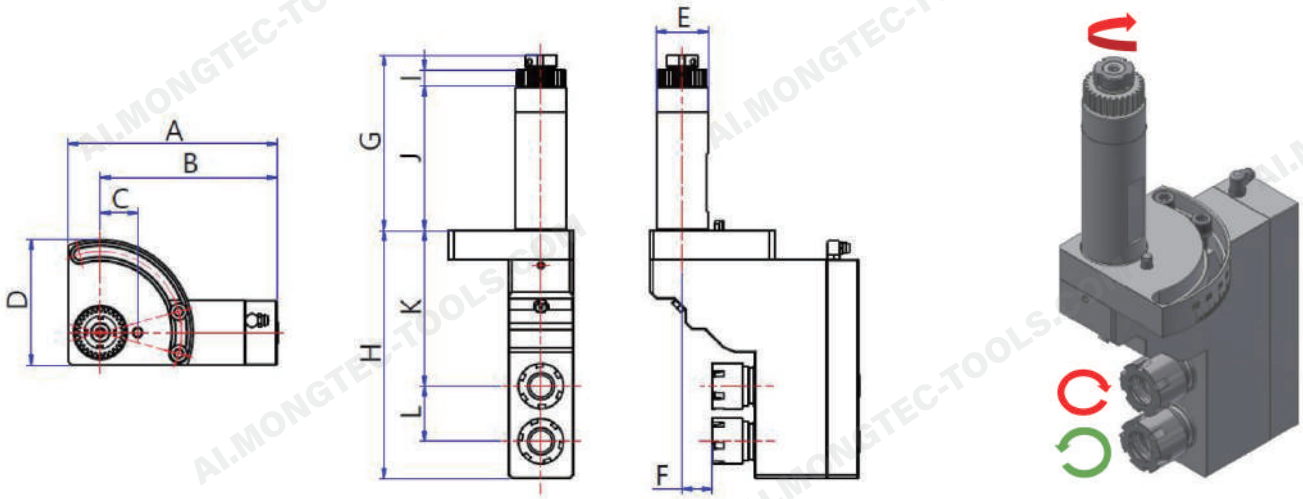


| Adjustable-Angle Axial Live Tool Holder | | | |
|---|---|---|---|
| **Model** | XD38HII-15020 | **HANWHA Part No.** | - |
| **Gear Ratio** | 1 / 1 | **Max. Speed** | 6000 rpm |
| **Max. Collet Dia.** | 13 mm | **Angle Range** | 0 ~ 90° |
| **Collet** | Main Spindle: AR20-M, ER20-M | | |
| **Compatible Machines** | XD32/XD35/XD38/XD32II/XD38II | | |

| Model | A | B | C | D | E | F | G | H | I | J | K | L |
|---|---|---|---|---|---|---|---|---|---|---|---|---|
| XD38HII-15020 | 129.1 | 109.1 | 23 | 77.5 | Ø32 | 18.5 | 108 | 153 | 10 | 89 | 96 | 34 |

Unit: mm

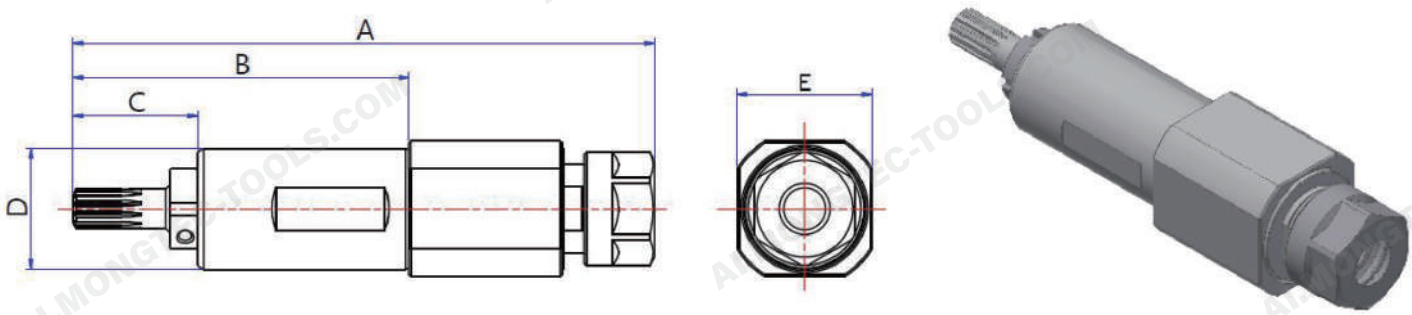


| Radial Milling Live Tool Holder | | | |
|---|---|---|---|
| **Model** | XD20H-10310 | **HANWHA Part No.** | - |
| **Gear Ratio** | 1 / 1 | **Max. Speed** | 8000 rpm |
| **Max. Collet Dia.** | 10 mm | | |
| **Collet** | AR16-A, ER16-A | | |
| **Compatible Machines** | XD12/XD16/XD12II/XD16II/XD12III/XD16III/ XD20/XD26/XD20V/XD20M | | |

| Model | A | B | C | D | E |
|---|---|---|---|---|---|
| XD20H-10310 | 144.5 | 83.5 | 31 | Ø30 | □33.5 |

Unit: mm

Specifications and dimensions are for reference only and subject to change without notice. Please confirm the latest specifications before ordering.

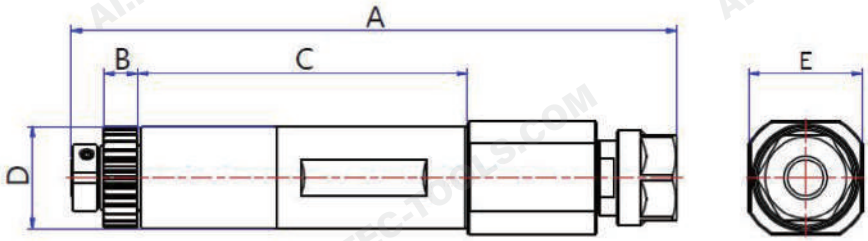

| Radial Milling Live Tool Holder | | | |
|---|---|---|---|
| **Model** | XD20HII-10310 | **HANWHA Part No.** | - |
| **Gear Ratio** | - | **Max. Speed** | 6000 rpm |
| **Max. Collet Dia.** | 10 mm | | |
| **Collet** | AR16-A, ER16-A | | |
| **Compatible Machines** | XD20II/XD26II/XE20/XE26 | | |

| Model | A | B | C | D | E |
|---|---|---|---|---|---|
| XD20HII-10310 | 178 | 10 | 97 | Ø30 | □33.5 |

Unit: mm

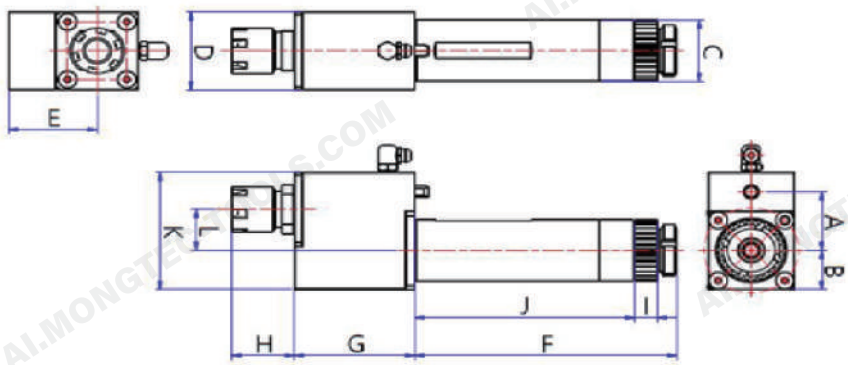

| Radial Milling Holder | | | |
|---|---|---|---|
| **Model** | XD26HII-12110 | **HANWHA Part No.** | - |
| **Gear Ratio** | 1 / 1 | **Max. Speed** | 6000 rpm |
| **Max. Collet Dia.** | 10 mm | | |
| **Collet** | AR16-M, ER16-M | | |
| **Compatible Machines** | XD20II/XD26II/XE20/XE26 | | |

| Model | A | B | C | D | E | F | G | H | I | J | K | L |
|---|---|---|---|---|---|---|---|---|---|---|---|---|
| XD26HII-12110 | 28.5 | 19 | Ø30 | 38 | 39 | 115 | 53 | 27.5 | 10 | 96.5 | 57 | 20 |

Unit: mm

Specifications and dimensions are for reference only and subject to change without notice. Please confirm the latest specifications before ordering.

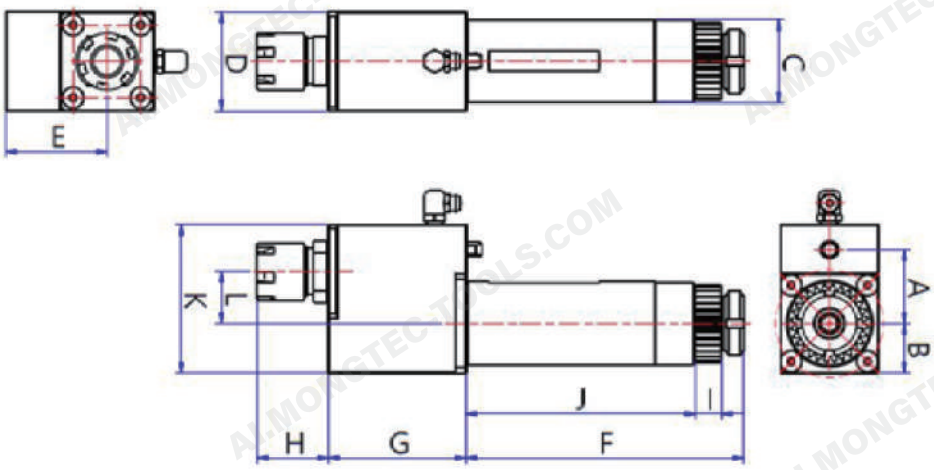

| Radial Milling Holder | | | |
|---|---|---|---|
| **Model** | XD38HII-12110 | **HANWHA Part No.** | - |
| **Gear Ratio** | 1 / 1 | **Max. Speed** | 6000 rpm |
| **Max. Collet Dia.** | 10 mm | | |
| **Collet** | AR16-M, ER16-M | | |
| **Compatible Machines** | XD32/XD35/XD38/XD32II/XD38II | | |

| Model | A | B | C | D | E | F | G | H | I | J | K | L |
|---|---|---|---|---|---|---|---|---|---|---|---|---|
| XD38HII-12110 | 28.5 | 19 | Ø32 | 38 | 39 | 107 | 53 | 27.5 | 10 | 88.5 | 57 | 20 |

Unit: mm

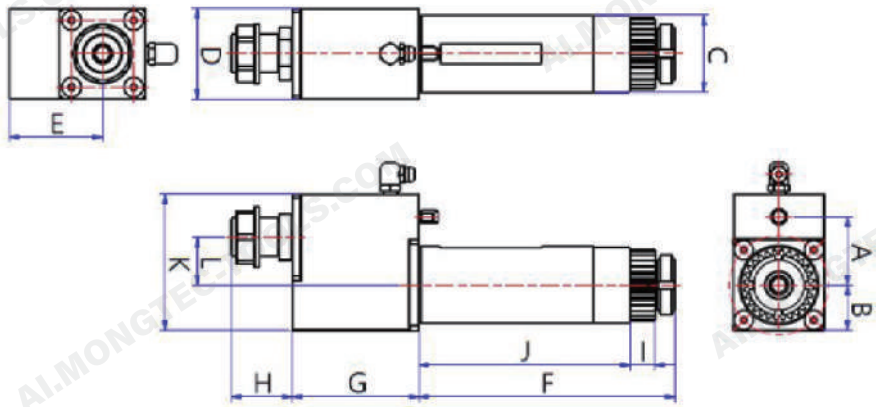

| Slitting Saw Holder | | | |
|---|---|---|---|
| **Model** | XD38II-10410 | **HANWHA Part No.** | - |
| **Gear Ratio** | 1 / 1 | **Max. Speed** | 4000 rpm |
| **Saw Arbor** | Ø16 | | |
| **Compatible Machines** | XD32/XD35/XD38/XD32II/XD38II | | |

| Model | A | B | C | D | E | F | G | H | I | J | K | L |
|---|---|---|---|---|---|---|---|---|---|---|---|---|
| XD38II-10410 | 28.5 | 19 | Ø32 | 38 | 39 | 107 | 53 | 25.5 | 10 | 88.5 | 57 | 20 |

Unit: mm

Specifications and dimensions are for reference only and subject to change without notice. Please confirm the latest specifications before ordering.

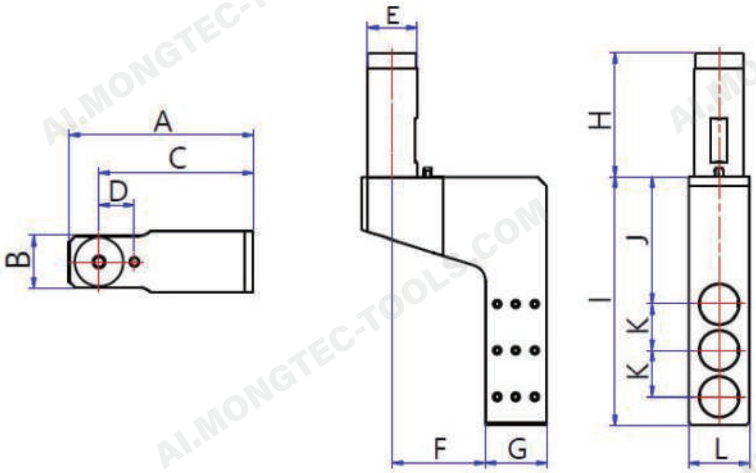

| Drilling Holder | | | |
|---|---|---|---|
| **Model** | XD38IIH-11030 | **HANWHA Part No.** | - |
| **Gear Ratio** | - | **Max. Speed** | - |
| **Max. Collet Dia.** | - | **Bore Dia.** | Ø25mm |
| **Collet** | - | | |
| **Compatible Machines** | XD32/XD35/XD38/XD32II/XD38II | | |

| Model | A | B | C | D | E | F | G | H | I | J | K | L |
|---|---|---|---|---|---|---|---|---|---|---|---|---|
| XD38IIH-11030 | 119.5 | 34 | 100 | 23 | Ø32 | 60 | 40 | 80 | 161 | 82.5 | 30 | 40 |

Unit: mm

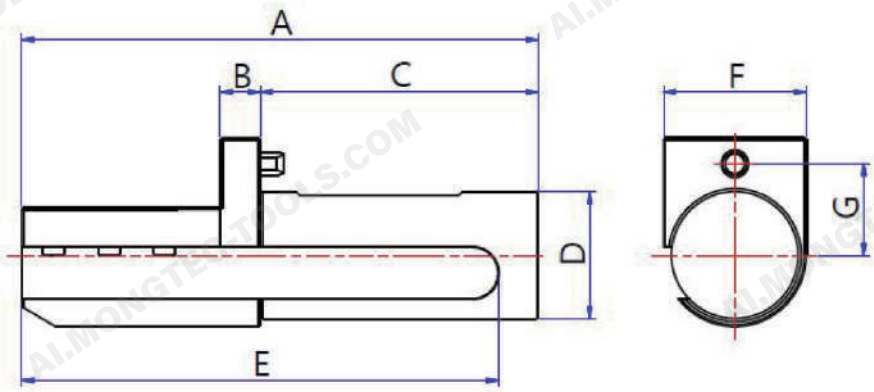


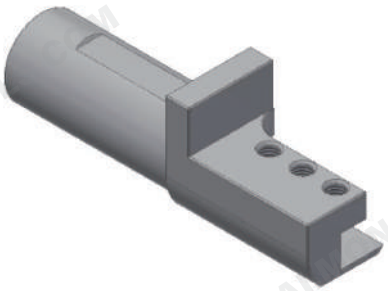

| Turning Tool Holder | | | |
|---|---|---|---|
| **Model** | XD38II-11510 | **HANWHA Part No.** | - |
| **Gear Ratio** | - | **Max. Speed** | - |
| **Max. Collet Dia.** | - | | |
| **Turning Tool Shank** | 12 x 12 mm | | |
| **Compatible Machines** | XD32/XD35/XD38/XD32II/XD38II | | |

| Model | A | B | C | D | E | F | G |
|---|---|---|---|---|---|---|---|
| XD38II-11510 | 130 | 10 | 70 | Ø32 | 120 | 36 | 23 |

Unit: mm

Specifications and dimensions are for reference only and subject to change without notice. Please confirm the latest specifications before ordering.

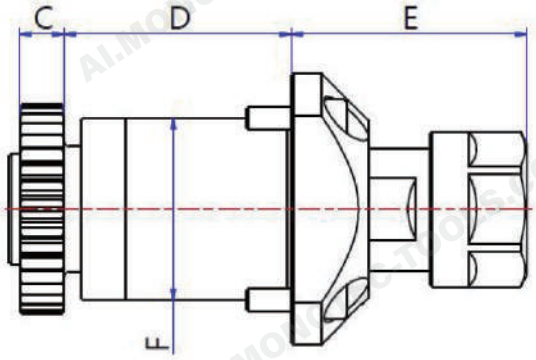


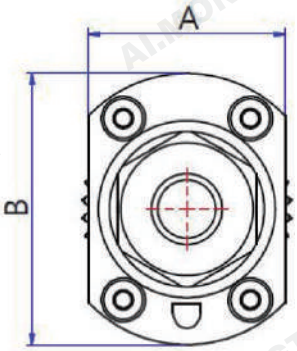

| Backworking Live Tool Holder | | | |
|---|---|---|---|
| **Model** | XD20H-30310 | **HANWHA Part No.** | - |
| **Gear Ratio** | 1 / 1 | **Max. Speed** | 8000 rpm |
| **Max. Collet Dia.** | 10 mm | **Angle Range** | - |
| **Collet** | AR16-A, ER16-A | | |
| **Compatible Machines** | XD20/XD26/XD20M/XE20/XE26 | | |

| Model | A | B | C | D | E | F |
|---|---|---|---|---|---|---|
| XD20H-30310 | 35.6 | Ø49 | 8 | 41 | 42.6 | Ø33 |

Unit: mm

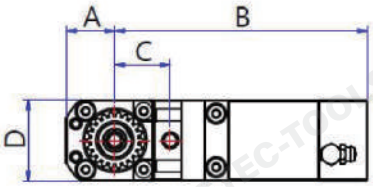


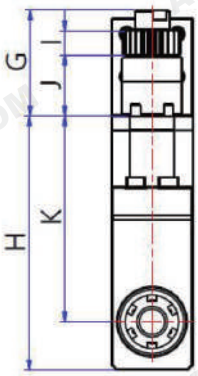


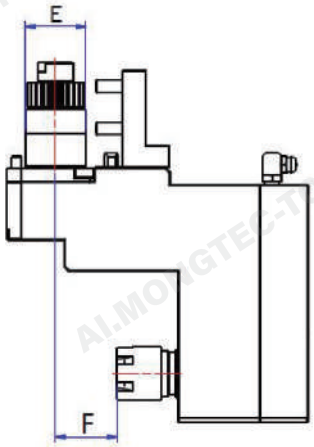


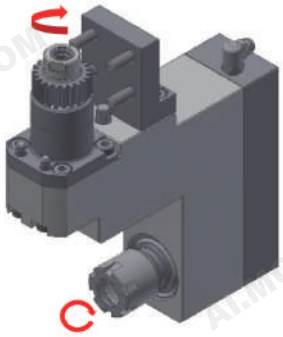

| Backworking Radial Milling Holder | | | |
|---|---|---|---|
| **Model** | XD20V-50210 | **HANWHA Part No.** | - |
| **Gear Ratio** | 1 / 1 | **Max. Speed** | 6000 rpm |
| **Max. Collet Dia.** | 10 mm | | |
| **Collet** | Main Spindle: AR16-M, ER16-M | | |
| **Compatible Machines** | XD20V | | |

| Model | A | B | C | D | E | F | G | H | I | J | K |
|---|---|---|---|---|---|---|---|---|---|---|---|
| XD20V-50210 | 20 | 104.5 | 23 | 33.5 | Ø25 | 25.5 | 43.5 | 105 | 10 | 25 | 85 |

Unit: mm

Specifications and dimensions are for reference only and subject to change without notice. Please confirm the latest specifications before ordering.

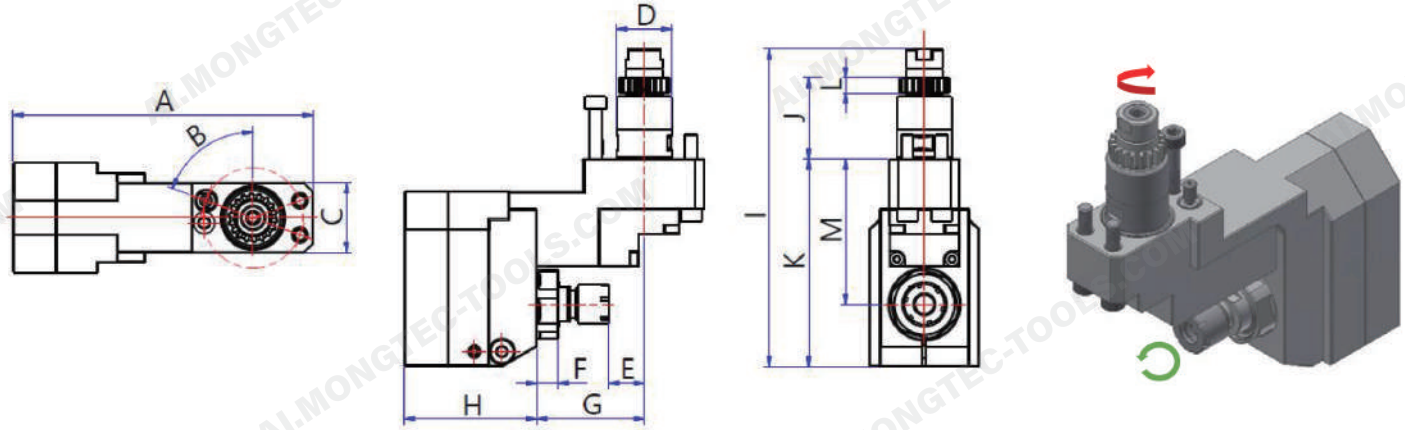


| Backworking Radial Milling Holder | | | |
|---|---|---|---|
| **Model** | XD12H-30210 | **HANWHA Part No.** | - |
| **Gear Ratio** | 1 / 0.55 | **Max. Speed** | |
| **Max. Collet Dia.** | 7 mm | **Spindle Adjustment** | ±1 mm |
| **Collet** | Main Spindle: AR11-M, ER11-M | | |
| **Compatible Machines** | XD12H | | |

| Model | A | B | C | D | E | F | G | H | I | J | K | L | M |
|---|---|---|---|---|---|---|---|---|---|---|---|---|---|
| XD12H-30210 | 120 | 70° | 28 | Ø22 | 14.2 | 8.5 | 43 | 53 | 127 | 32.5 | 83 | 6 | 58 |

Unit: mm

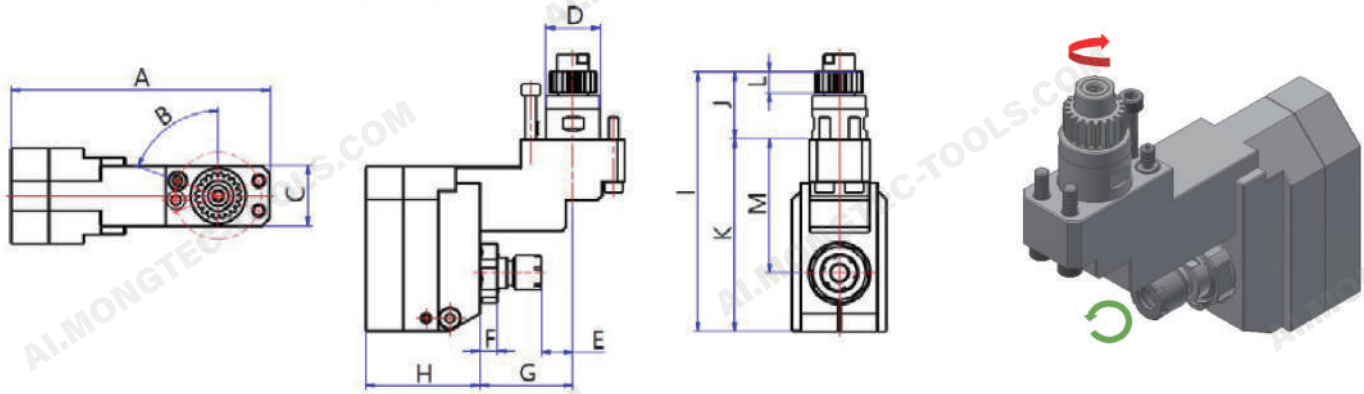


| Backworking Radial Milling Holder | | | |
|---|---|---|---|
| **Model** | XD12HIII-30210 | **HANWHA Part No.** | - |
| **Gear Ratio** | 1 / 0.55 | **Max. Speed** | - |
| **Max. Collet Dia.** | 7 mm | **Spindle Adjustment** | ±1 mm |
| **Collet** | Main Spindle: AR11-M, ER11-M | | |
| **Compatible Machines** | XD12III/XD16III | | |

| Model | A | B | C | D | E | F | G | H | I | J | K | L | M |
|---|---|---|---|---|---|---|---|---|---|---|---|---|---|
| XD12HIII-30210 | 96 | 70° | 28 | Ø25 | 14.7 | 8 | 43 | 53 | 128 | 31 | 89 | 10 | 62 |

Unit: mm

Specifications and dimensions are for reference only and subject to change without notice. Please confirm the latest specifications before ordering.

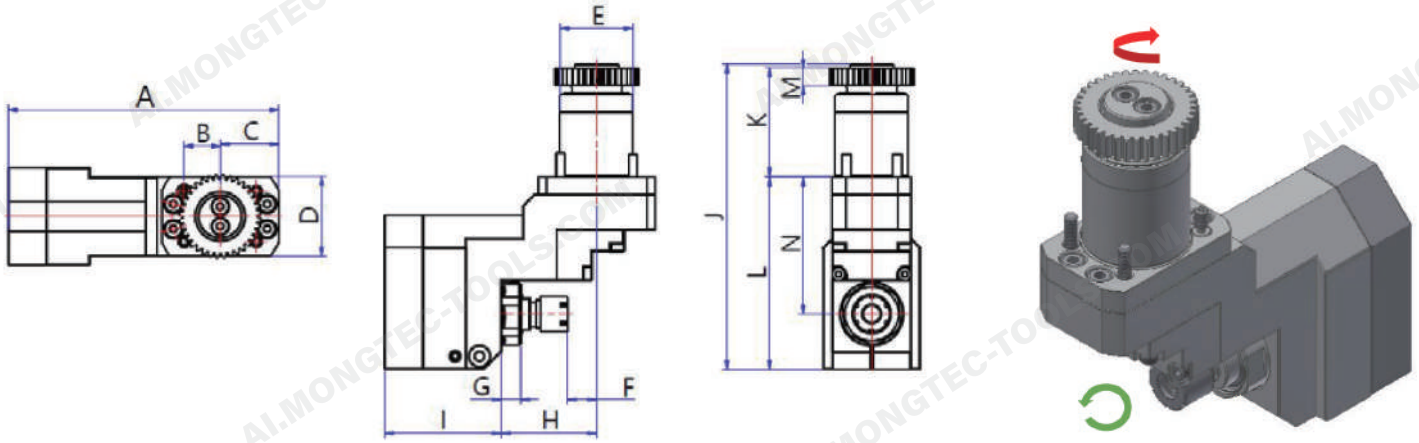


| Backworking Radial Milling Holder | | | |
|---|---|---|---|
| **Model** | XD20H-30210 | **HANWHA Part No.** | - |
| **Gear Ratio** | 1 / 0.55 | **Max. Speed** | 4000 rpm |
| **Max. Collet Dia.** | 7 mm | **Center Adjustment** | ±1 mm |
| **Collet** | Main Spindle: AR11-M, ER11-M | | |
| **Compatible Machines** | XD20/XD26/XD20M/XE20/XE26 | | |

| Model | A | B | C | D | E | F | G | H | I | J | K | L | M | N |
|---|---|---|---|---|---|---|---|---|---|---|---|---|---|---|
| XD20H-30210 | 122.5 | 16.38 | 26.5 | 36 | Ø33 | 13.2 | 8.6 | 43 | 53 | 138 | 49 | 87 | 8 | 62 |

Unit: mm

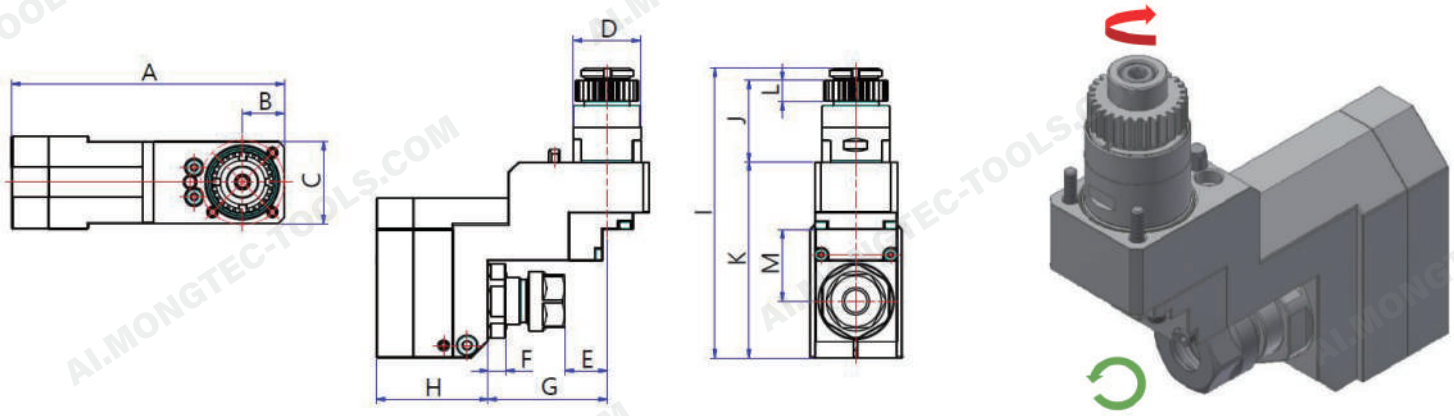


| Backworking Radial Milling Holder | | | |
|---|---|---|---|
| **Model** | XD32H-30210 | **HANWHA Part No.** | - |
| **Gear Ratio** | 1 / 0.77 | **Max. Speed** | 4000 rpm |
| **Max. Collet Dia.** | 10 mm | **Center Adjustment** | ±1 mm |
| **Collet** | Main Spindle: AR16-A, ER16-A | | |
| **Compatible Machines** | XD32/XD35/XD38/XD32II/XD38II | | |

| Model | A | B | C | D | E | F | G | H | I | J | K | L | M | N | O |
|---|---|---|---|---|---|---|---|---|---|---|---|---|---|---|---|
| XD32H-30210 | 129.5 | 20 | 25 | 39 | Ø32 | 2 | 20 | 8.5 | 139.5 | 38.5 | 66 | 27 | 10 | 34 | 19 |

Unit: mm

Specifications and dimensions are for reference only and subject to change without notice. Please confirm the latest specifications before ordering.

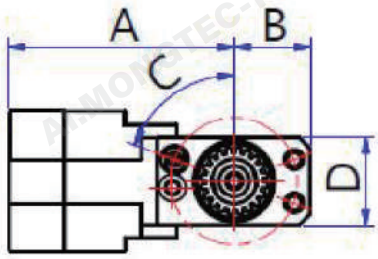


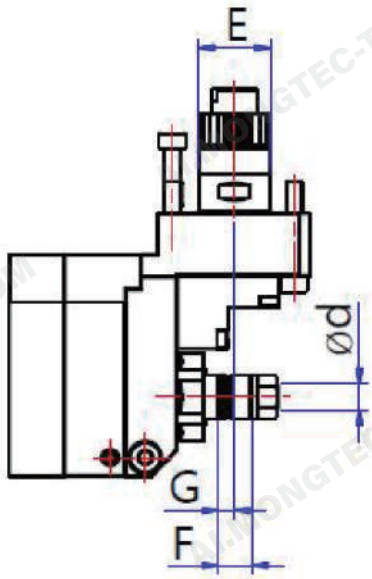


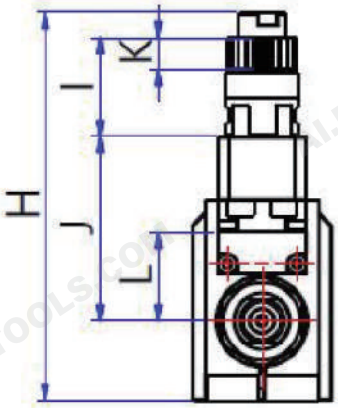


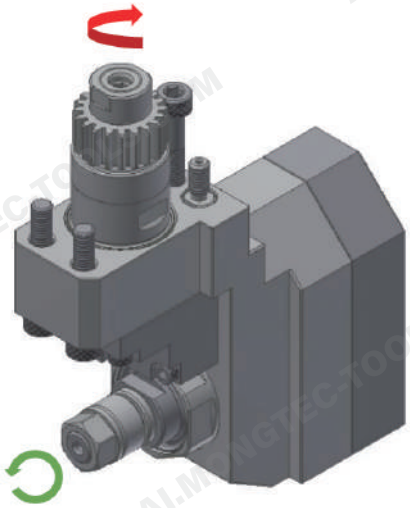

| Backworking Slitting Saw Holder | | | |
|---|---|---|---|
| **Model** | XD12H-30410 | **HANWHA Part No.** | - |
| **Gear Ratio** | 1 / 0.55 | **Max. Speed** | 4000 rpm |
| **Max. Saw Dia.** | Ø50 | **Center Adjustment** | ±1 mm |
| **Saw Arbor** | Ød | | |
| **Compatible Machines** | XD12H | | |

| Shank Dia. (Ød) | Spacer | Saw Clamping Screw |
|---|---|---|
| Ø6 | GK060120250 / GK060120700 | CNM06100080 |
| Ø8 | GK080140250 / GK080140700 | CNM08100080 |
| Ø10 | GK100170250 / GK100170700 | CNM10100080 |
| Ø12 | GK120190250 / GK120190700 | CNM12125080 |
| Ø12.7 | GK127190250 / GK127190700 | CNM12125080 |
| Ø13 | GK130190250 / GK130190700 | CNM12125080 |

| Model | A | B | C | D | E | F | G | H | I | J | K | L |
|---|---|---|---|---|---|---|---|---|---|---|---|---|
| XD12H-30410 | 71 | 24 | 70° | 28 | Ø23 | 10.5 | 5(MAX) | 122 | 31 | 58 | 10 | 28 |

Unit: mm

Specifications and dimensions are for reference only and subject to change without notice. Please confirm the latest specifications before ordering.

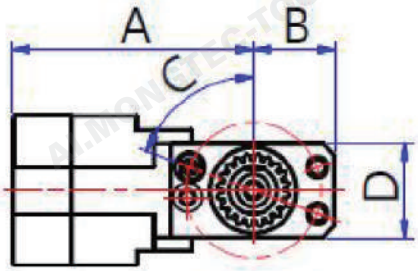


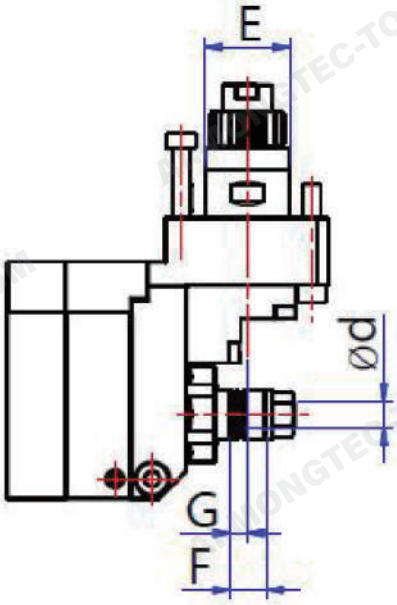


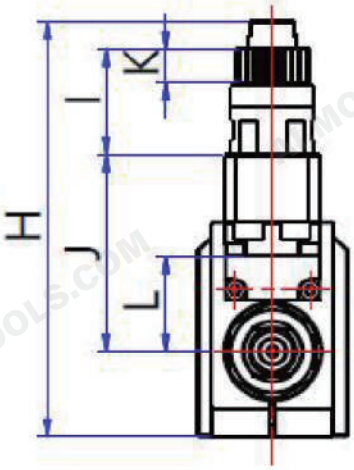


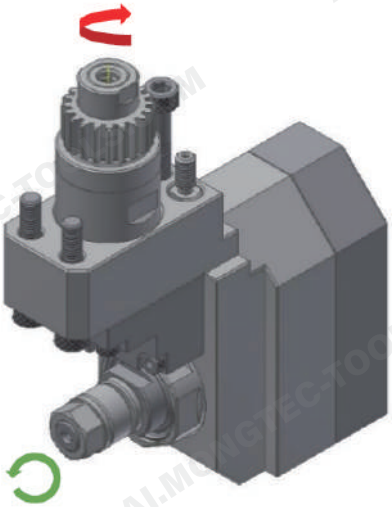

| Backworking Slitting Saw Holder | | | |
|---|---|---|---|
| **Model** | XD12HIII-30410 | **HANWHA Part No.** | - |
| **Gear Ratio** | 1 / 0.55 | **Max. Speed** | 4000 rpm |
| **Max. Saw Dia.** | Ø50 | **Center Adjustment** | ±1 mm |
| **Saw Arbor** | Ød | | |
| **Compatible Machines** | XD12III/XD16III | | |

| Shank Dia. (Ød) | Spacer | Saw Clamping Screw |
|---|---|---|
| Ø6 | GK060120250 / GK060120700 | CNM06100080 |
| Ø8 | GK080140250 / GK080140700 | CNM08100080 |
| Ø10 | GK100170250 / GK100170700 | CNM10100080 |
| Ø12 | GK120190250 / GK120190700 | CNM12125080 |
| Ø12.7 | GK127190250 / GK127190700 | CNM12125080 |
| Ø13 | GK130190250 / GK130190700 | CNM12125080 |

| Model | A | B | C | D | E | F | G | H | I | J | K | L |
|---|---|---|---|---|---|---|---|---|---|---|---|---|
| XD20HIII-30410 | 71 | 24 | 70° | 28 | Ø25 | 10.5 | 5(MAX) | 122 | 31 | 58 | 10 | 28 |

Unit: mm

Specifications and dimensions are for reference only and subject to change without notice. Please confirm the latest specifications before ordering.

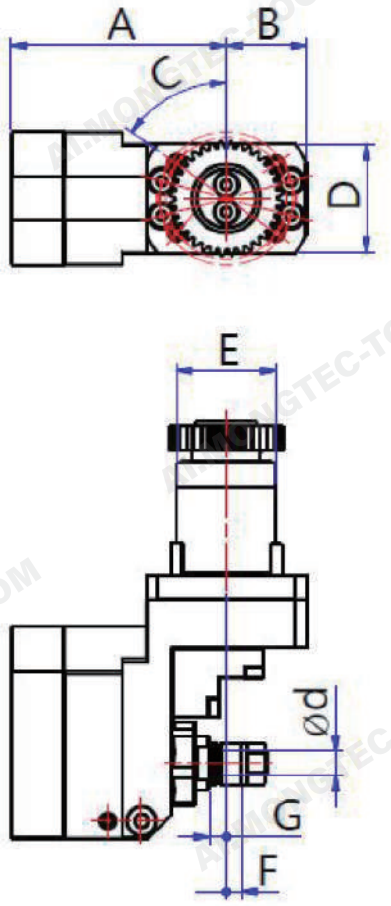


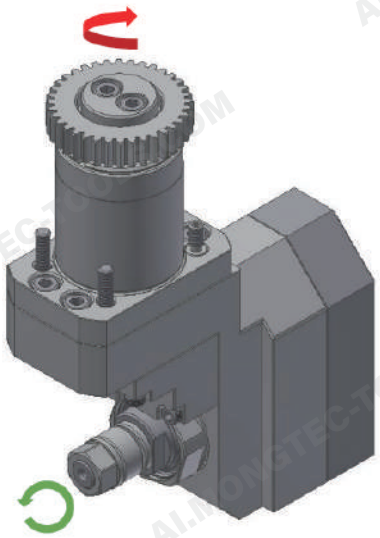

| Backworking Slitting Saw Holder | | | |
|---|---|---|---|
| **Model** | XD20H-30410 | **HANWHA Part No.** | - |
| **Gear Ratio** | 1 / 0.55 | **Max. Speed** | 4000 rpm |
| **Max. Saw Dia.** | Ø50 | **Center Adjustment** | ±1 mm |
| **Saw Arbor** | Ød | | |
| **Compatible Machines** | XD20/XD26/XD20M/XE20/XE26 | | |

| Shank Dia. (Ød) | Spacer | Saw Clamping Screw |
|---|---|---|
| Ø6 | GK060120250 / GK060120700 | CNM06100080 |
| Ø8 | GK080140250 / GK080140700 | CNM08100080 |
| Ø10 | GK100170250 / GK100170700 | CNM10100080 |
| Ø12 | GK120190250 / GK120190700 | CNM12125080 |
| Ø12.7 | GK127190250 / GK127190700 | CNM12125080 |
| Ø13 | GK130190250 / GK130190700 | CNM12125080 |

| Model | A | B | C | D | E | F | G | H | I | J | K | L |
|---|---|---|---|---|---|---|---|---|---|---|---|---|
| XD20H-30410 | 71 | 26.5 | 55° | 36 | Ø33 | 5 | 6(MAX) | 138 | 49 | 87 | 8 | 62 |

Unit: mm

Specifications and dimensions are for reference only and subject to change without notice. Please confirm the latest specifications before ordering.

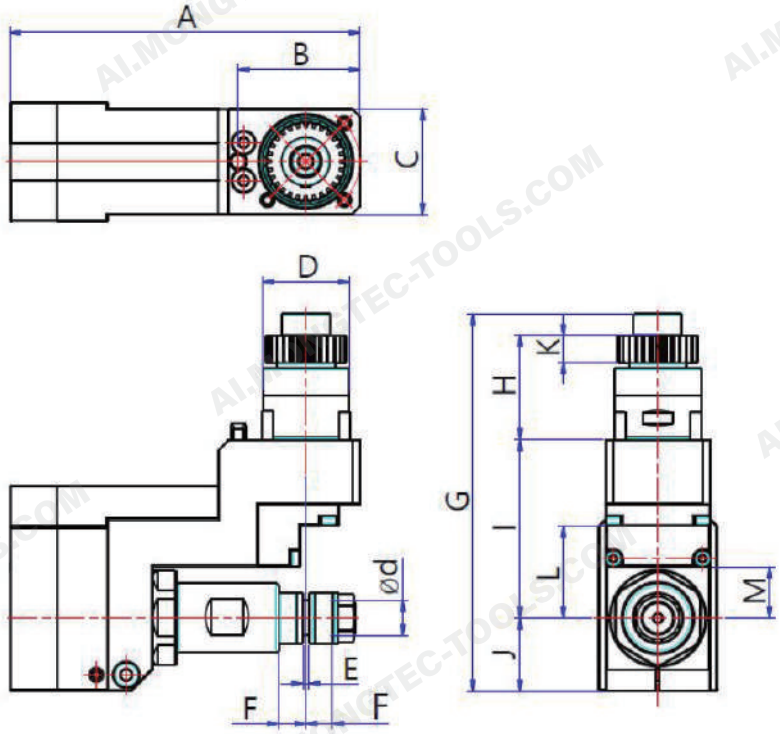


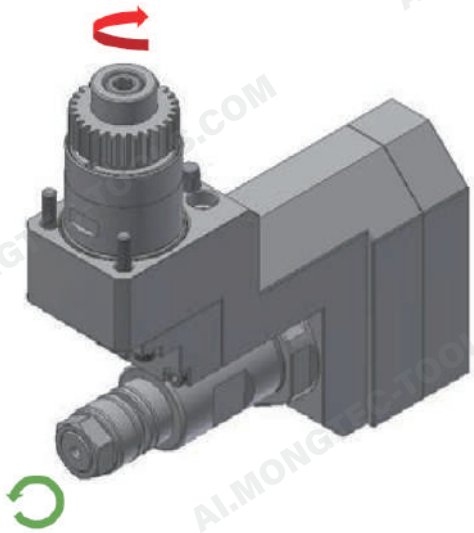

| Backworking Slitting Saw Holder | | | |
|---|---|---|---|
| **Model** | XD32H-30410 | **HANWHA Part No.** | - |
| **Gear Ratio** | 1 / 0.77 | **Max. Speed** | 4000 rpm |
| **Max. Saw Dia.** | Ø60 | **Center Adjustment** | ±1 mm |
| **Saw Arbor** | Ød | | |
| **Compatible Machines** | XD32H, XD35H, XD38H | | |

| Shank Dia. (Ød) | Spacer | Saw Clamping Screw |
|---|---|---|
| Ø8 | GK080140250 / GK0801400650 | CNM08100080 |
| Ø10 | GK100170250 / GK1001700650 | CNM10100080 |
| Ø12.7 | GK127190250 / GK1271900650 | CNM12125080 |
| Ø13 | GK130190250 / GK1301900650 | CNM12125080 |

| Model | A | B | C | D | E | F | G | H | I | J | K | L | M |
|---|---|---|---|---|---|---|---|---|---|---|---|---|---|
| XD32H-30410 | 129.5 | 45 | 39 | Ø33 | 2 | 10(MAX) | 139.5 | 38.5 | 66 | 27 | 10 | 34 | 19 |

Unit: mm

Specifications and dimensions are for reference only and subject to change without notice. Please confirm the latest specifications before ordering.

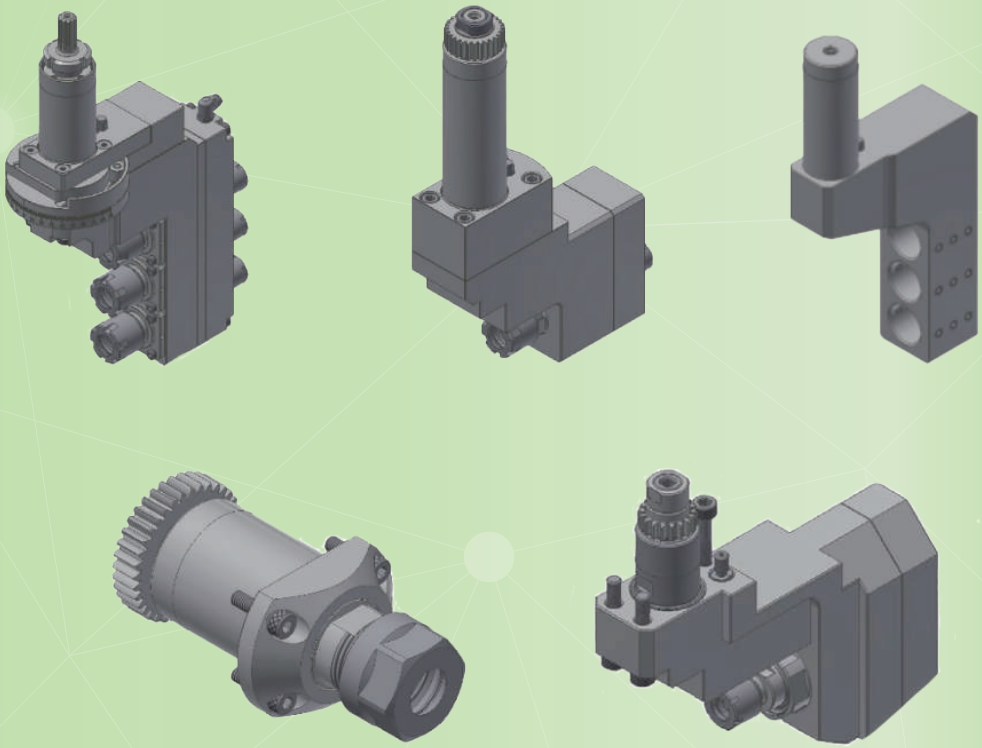

Facebook WeChat YouTube Mongtec Web LINE WhatsApp


Mongtec Precision Inc.

TEL : +886-4-22653360

FAX : +886-4-22653386

E-mail : info@mongtec.com

No. 87, Sec. 1, Daqing St., South Dist., Taichung City 402024, Taiwan (R.O.C.)