MONGTEC®
CNC職人のこだわり

Quick Change Collet Chucks Applications

mongtec | mongtec-tools.com | ai.mongtec-tools.com | info@mongtec.com

Manufacturing Facility

Our production facility is equipped with high-precision 5-axis machining centers imported from Japan and Germany, delivering industry-leading machining accuracy. By integrating advanced automation technologies, we achieve automated workpiece loading and unloading with robotic systems, real-time process monitoring, and in-line inspection.

Our comprehensive tool management system and robotic automation replace manual loading and unloading operations, while an intelligent monitoring system continuously supervises the production line to ensure stable and precise manufacturing.

To further enhance manufacturing quality, the facility is equipped with a centralized oil mist collection system and a fully enclosed temperature-controlled, dust-free workshop, providing a clean machining environment with excellent thermal stability.

Our large-travel machining centers are capable of processing oversized cutting tools and customized components, accommodating workpieces up to approximately 1 meter in diameter. Combined with multi-axis machining centers and vertical grinding machines, we are able to manufacture complex geometries with exceptional precision.

Manufacturing Facility

In addition to our advanced 5-axis machining capabilities, our manufacturing facility is equipped with a complete range of CNC machining equipment, including CNC turning centers, 3-axis and 4-axis machining centers, CNC grinding machines, and gun drilling machines. These comprehensive manufacturing capabilities enable us to meet a wide variety of precision machining requirements with exceptional efficiency and accuracy.

To ensure consistent product quality, we integrate German production management systems with advanced process control technologies throughout our manufacturing operations. Our in-house heat treatment capabilities include vacuum hardening, high-frequency induction hardening, vacuum brazing, vacuum tempering, carburizing, and cryogenic treatment, allowing us to optimize the mechanical properties of each component according to its application.

We also provide comprehensive surface treatment processes for steel components, including black oxide finishing, nickel plating, sandblasting, and shot blasting. These treatments significantly enhance wear resistance, corrosion protection, and overall product durability.

Supported by a full range of precision inspection equipment and rigorous quality control procedures, every product is manufactured to ensure outstanding dimensional accuracy, reliability, and consistent performance.

Various testing equipment

Gear Grinding Fixture

Product Features

- Slim fixture body design suitable for small-diameter workpieces while maintaining excellent rigidity.
- High radial clamping force.
- Axial pull-back clamping mechanism ensures tight contact between the workpiece and locating surface for superior stability.
- Repeatability: < 0.01 mm
- Vulcanized rubber-bonded clamping sleeve effectively suppresses machining vibration.
- Built-in flushing channels between the workpiece and clamping sleeve improve chip evacuation and cleanliness.
- Parallel clamping design provides excellent rigidity, high gripping force, and reduced wear.
- The clamping sleeve and drawbar are integrated into a single assembly. Both clamping and release are actuated by the drawbar, allowing the mandrel to be designed with a slender profile. This design is especially suitable for long overhang applications.

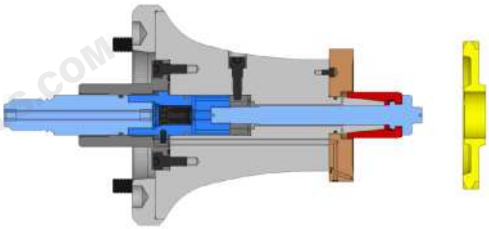

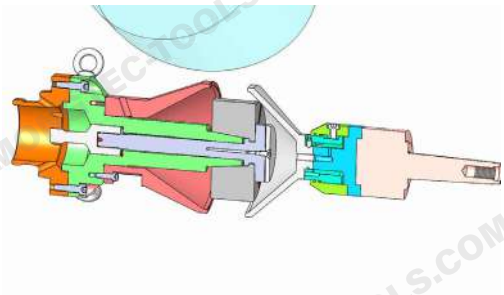

- For example, in gear grinding fixtures, front-end clamping through a deep bore significantly improves clamping rigidity, ensuring machining stability and high precision.

Liebherr

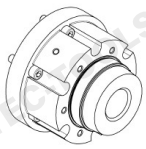

Gleason

Koepfer

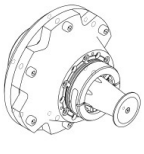

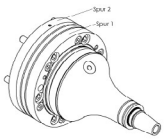

KAPP

Hobbing Fixture

Product Features

- High radial clamping force for secure and stable workholding.
- Covers a clamping diameter range from Ø20 to Ø120 mm using only five mandrel sizes, simplifying fixture management.
- Concentricity accuracy of less than 0.01 mm.
- A vulcanized rubber-bonded clamping sleeve effectively suppresses vibration during machining.
- Three locating block mounting surfaces provide greater flexibility for different applications.
- Multiple interface options ensure seamless compatibility with various machine tools.
- Parallel clamping design delivers excellent rigidity, high gripping force, and minimal wear.
- Standardized precision clamping sleeves are available from stock for fast replacement.
- Clamping sleeves are interchangeable with those used on turning mandrel fixtures.

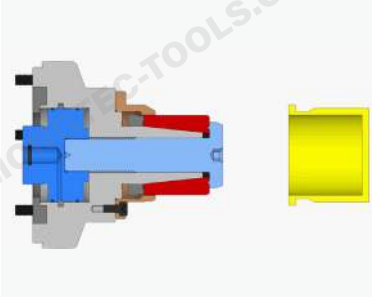

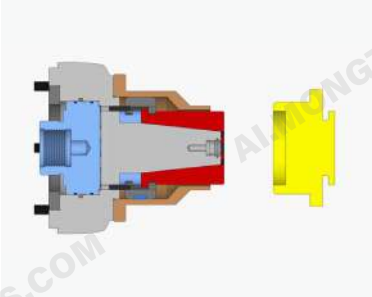

Standard Hydraulic Cylinder
Available in both manual and automatic configurations.

Quick Change System
Changeover time: 1 minute
Repeatability: 0.003 mm

Customized Interface Design
Machine interfaces can be customized to match the mounting dimensions of individual machine tools.

Hydraulic Expansion Fixture

Hydraulic expansion fixtures operate based on Pascal's Law, which states that pressure applied to an enclosed incompressible fluid is transmitted uniformly throughout the fluid. By utilizing hydrostatic expansion technology, hydraulic pressure is generated inside the fixture, causing the elastic expansion element to deform uniformly through 360 degrees around its circumference. This ensures precise positioning and secure clamping of both bores and shafts.

The hydraulic expansion mechanism provides stable and reliable workholding while simultaneously achieving accurate positioning and effective torque transmission. By using interchangeable reducing sleeves, a single fixture can accommodate workpieces of various sizes, making it well suited for flexible manufacturing environments.

The quick adjustment and rapid clamping design significantly reduce setup and changeover time, improving machine utilization and lowering production costs. At the same time, the fixture maximizes machining performance by enhancing workpiece accuracy and ensuring consistent product quality throughout the manufacturing process.

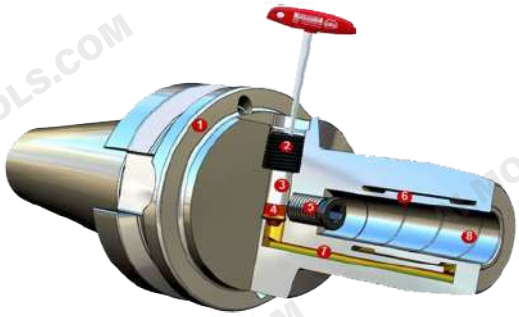

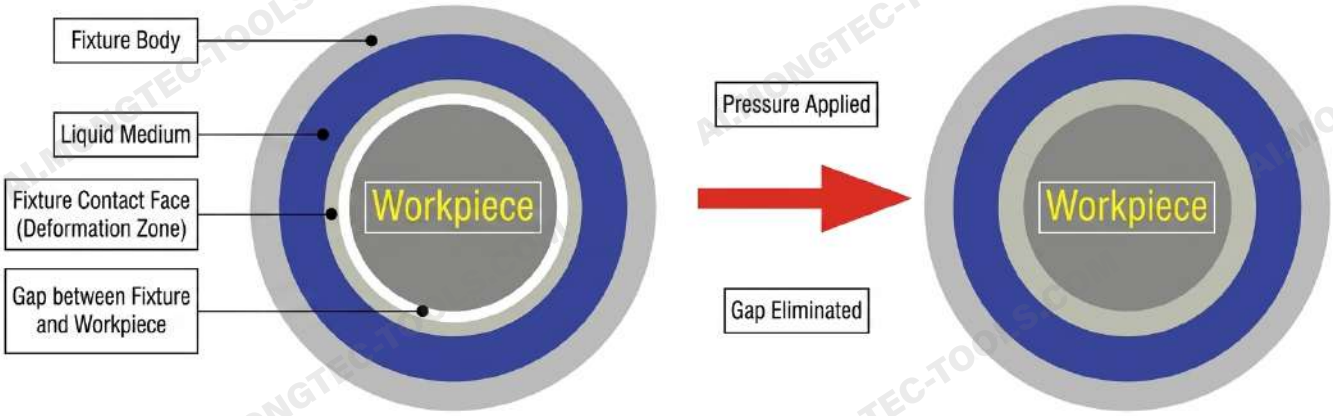

Hydraulic Expansion Fixture

Product Features

- Stable hydraulic system with a completely sealed internal hydraulic medium, operating independently from external influences.
- Flexible clamping options available in both manual and automatic configurations for integration with various machine tools.
- Durable elastic expansion surface provides a long service life with seamless 360-degree surface contact, ensuring uniform and reliable clamping force.
- Hydraulic-driven clamping force up to 100 MPa, with adjustable clamping pressure, minimal deformation, and high positioning accuracy.
- Repeatability of ≤ 0.003 mm to ensure consistent machining quality.
- Quick clamping and release improve production efficiency by minimizing setup time.
- Custom-designed solutions are available to accommodate various machine tools and workpiece requirements. Suitable for workpieces with diameters as small as 5 mm, while maintaining high rigidity and precision. Compatible with reducing sleeves and spline clamping sleeves for multiple workpiece sizes, with a quick-change design that enables rapid replacement of both workpieces and fixtures.

Maximum Expansion of Hydraulic Mandrels

The maximum expansion of a hydraulic mandrel is approximately 0.3% of the workpiece clamping diameter. The required expansion is determined by the following factors:

- Workpiece tolerance
- Mandrel expansion required for safe torque transmission
- Installation clearance between the workpiece and the mandrel

Here is the professional translation for your calculation example, suitable for technical documents, catalogs, or manuals:
Calculation Example:

- Workpiece:Ø25 H8
- 0.3% of the 25 mm diameter is 0.075 mm.

Workpiece Design Tolerance	Shank Dia.Ø25 H8	0.033 mm
Clearance between Workpiece and Mandrel	Manual Clamping	0.010 mm
Required Expansion for Safe Torque Transmission during Machining	Grinding	0.030 mm
Required Mandrel Expansion		0.073 mm

Hydraulic Expansion Fixture

According to the machining process and machine configuration, various clamping methods are available. The following are the four most commonly used solutions.

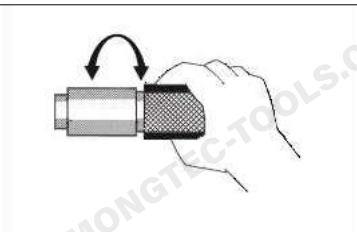

Manual Clamping (Without Auxiliary Tools)

Primarily used for inspection mandrels, where only a relatively low clamping force is required to achieve the desired positioning accuracy.

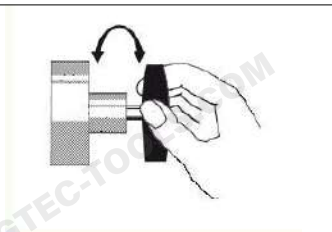

Manual Clamping (With Auxiliary Tools)

The most common clamping method for metal cutting applications. Additional tools are used to generate higher clamping force, ensuring machining stability and accuracy.

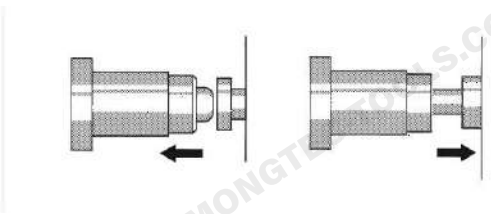

Automatic Clamping

Clamping force is generated by mechanical, pneumatic, hydraulic, or electromagnetic actuators, which drive and compress the clamping piston. This method is widely used in semi-automatic and fully automated machine tools to provide stable and efficient workholding.

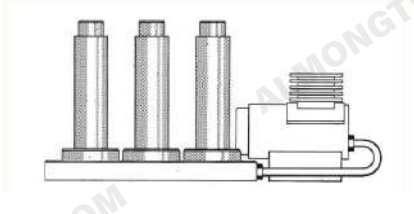

External Pressure-Assisted Clamping

An external pressure mechanism drives the pressure piston, enabling multiple Königdorne® fixtures to operate simultaneously at different positions, improving both clamping efficiency and machining stability.

Hydraulic Expansion Fixture Designs

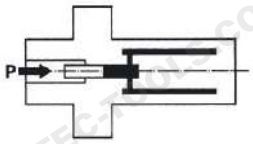

Fully Enclosed Design

The fixture body and clamping sleeve are permanently assembled as a single unit and cannot be separated.

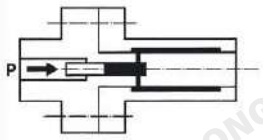

Axial Support Force Input

Support force is introduced along the axial direction. This design is commonly used in chuck fixtures, where the workpiece is secured through an axial locking mechanism.

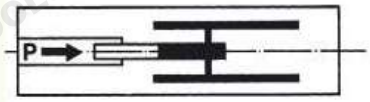

Radial Support Force Input

Support force is introduced from the outer diameter. Depending on the application, this design can be used for both mandrel fixtures and chuck fixtures.

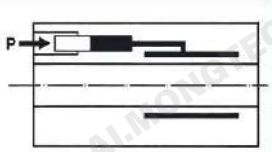

Open Design

The fixture body and clamping sleeve are separable, making maintenance and servicing more convenient.

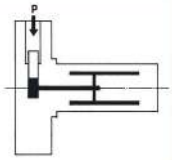

Central Clamping Force Input

Clamping force is applied through the center of the fixture, acting directly on the mandrel section. This design is primarily used in mandrel-type fixtures.

Hydraulic Expansion Fixture

Application Industries

Hydraulic expansion fixtures are widely used in industries requiring high-precision machining and reliable workholding, including:

- Construction machinery, such as bulldozers, excavators, and cranes
- Renewable energy equipment, including wind power generation systems
- Commercial vehicles, including heavy-duty trucks

Application Examples

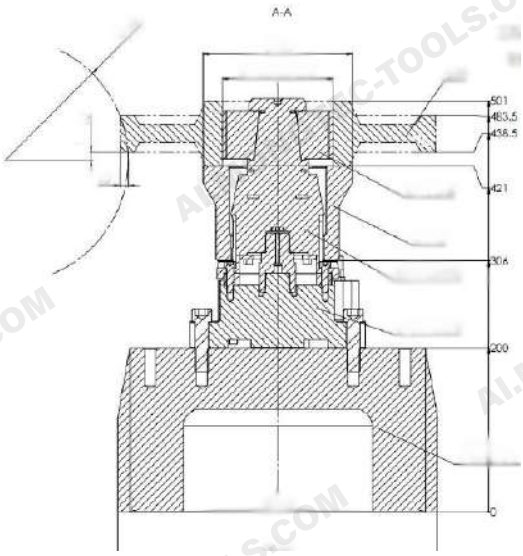

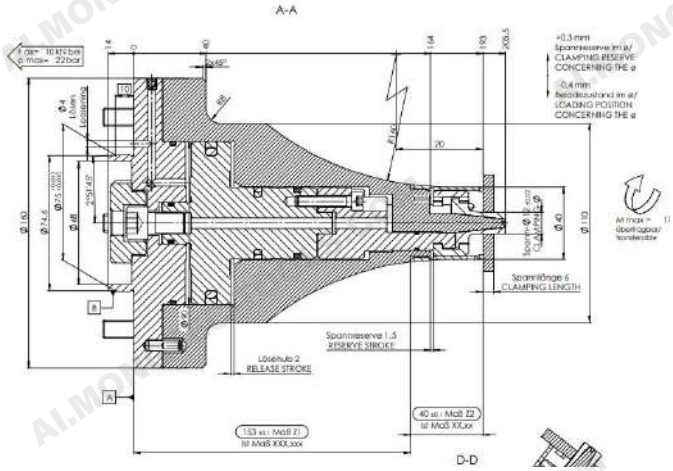

Application Examples

Internal Spline Expanding Fixture

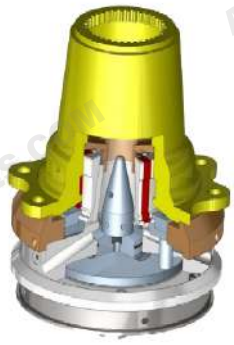

Application

The internal spline expanding fixture is designed for machining internal spline gears. Its expanding clamping mechanism provides secure and accurate workholding throughout the machining process.

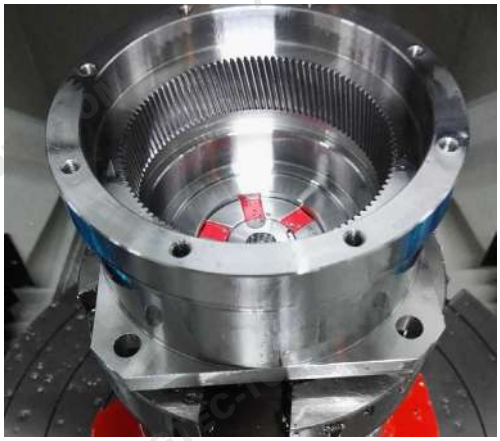

Features

- The clamping head is mounted inside a large clamping sleeve to ensure stable clamping force and high positioning accuracy.
- Suitable for workpieces with an outside diameter of up to 400 mm.
- Specifically designed for internal spline shaping through the bore.
- Optimized for use on vertical machine tools.

The large-size fixture provides excellent clamping stability and machining accuracy, making it an ideal solution for precision machining of oversized workpieces.

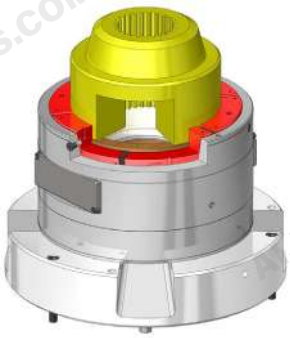

Application Examples

According to feedback from KAPP engineers, the fixture delivers outstanding positioning accuracy and excellent stability. Once installed on the machine, little to no additional alignment or adjustment is required, significantly reducing setup time while ensuring consistent machining accuracy.

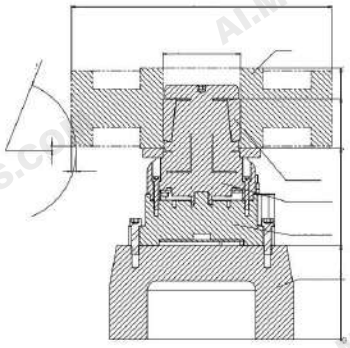

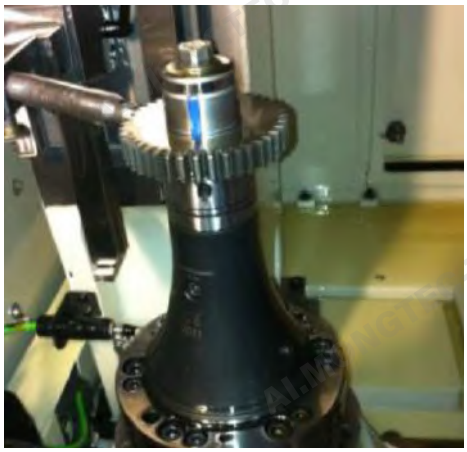

Application Examples

Clamping Applications

- Manual clamping
- Clamping diameter up to 400 mm
- Radial clamping force up to 200 kN

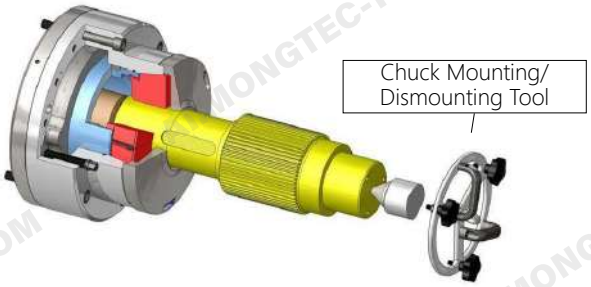

- OD Clamping + Tailstock Center (Driven Positioning)
- Manual Clamping
- Chip Guard / Protective Cover

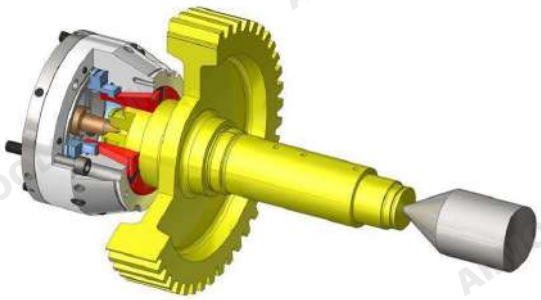

- Between-Centers Positioning + OD Clamping
- Hydraulic Clamping

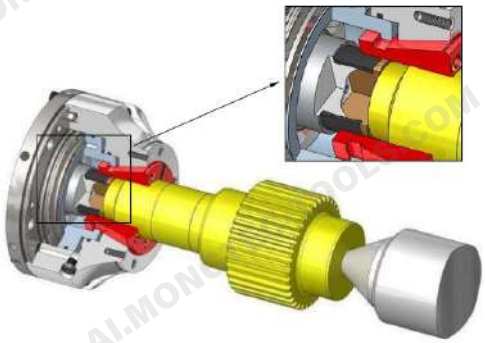

- Face-clamping Chuck with Floating Rear-axial Positioning Compensation

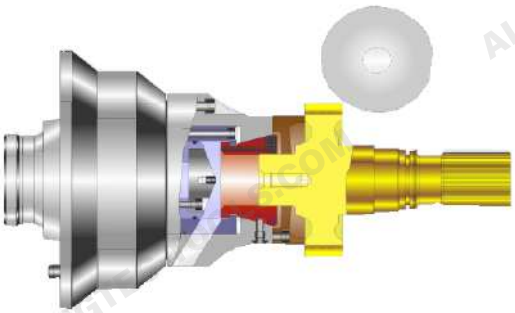

- Vibration-Damping Chuck / Anti-Vibration Fixture
- Compact Chuck Body / Miniaturized Fixture Body
- Front Positioning / Front-End Stop

Application Examples

Hobbing Mandrel

- The mandrel shown in the upper-right illustration is designed for gear hobbing applications.
- The clamping torque required during machining is primarily generated by the radial expansion of the mandrel.
- Clamping force is applied through the machine's hydraulic cylinder and drawbar.
- The locating shoulder at the upper end of the mandrel simultaneously positions and clamps the workpiece, allowing the mandrel to securely center and hold the workpiece without additional axial clamping.
  Auxiliary oil grooves or wear-resistant coatings can be applied to the clamping surface to provide higher torque transmission when clamping small-diameter workpieces.

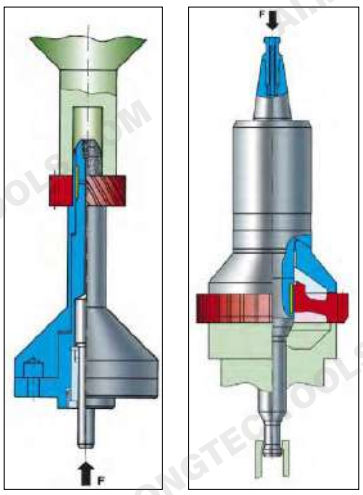

Multi-Workpiece Gear Grinding Fixture

- The illustration shows a multiple-workpiece clamping solution for gear grinding applications.
- Workpieces are first mounted and adjusted on an external setup station before being transferred to the grinding machine.
- Clamping is performed manually using radial clamping tools or by automated clamping systems.
- The mandrel, together with the mounted workpiece, is then installed on the grinding machine. The tapered interface between the fixture and the machine spindle is manufactured to a runout accuracy of 0.003 mm.

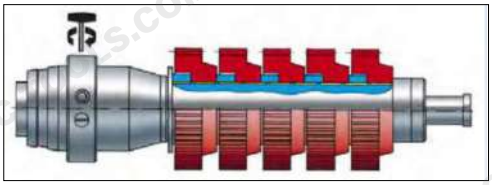

Mandrel for Automated Loading Systems

- The illustration shows a mandrel designed for machine tools equipped with automatic loading and unloading systems.
- One end of the fixture is permanently mounted on the machine spindle, while the clamping force is supplied by the machine's hydraulic cylinder.
- An internal force transmission mechanism actuates an eccentric cylindrical pin located near the clamping position, enabling robotic systems to accurately load the workpiece into the fixture.
- A guide sleeve connected to the tailstock center precisely pushes the workpiece into its clamping position.

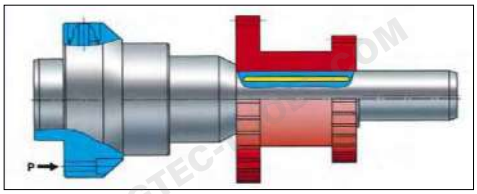

Application Examples

Hydraulic Expansion Fixture for Internal Splines and Precision Bores

- The hydraulic expansion fixture provides two independent clamping positions for internal spline and precision bore applications.
- A toothed clamping sleeve is used for internal spline workpieces and is also suitable for machining helical gears, as shown in the illustration.
- The mandrel is designed for wheel grinding applications.
- The dual clamping positions ensure accurate centering of the workpiece throughout the entire clamping length.
- The mandrel is supported by dual centers and an elastic clamping sleeve, while the radial clamping force is applied manually.
- The mandrel achieves a runout accuracy of 0.005 mm.

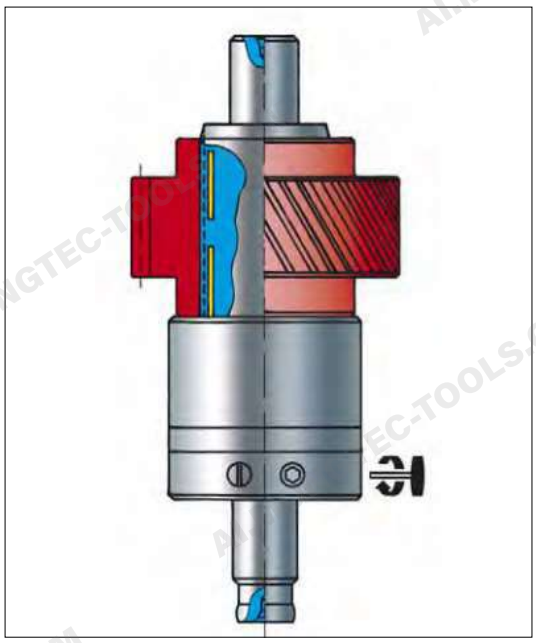

Hydraulic Mandrel with Integrated Pressure Conversion Mechanism

- The illustration on the right shows a hydraulic mandrel with an integrated pressure conversion mechanism mounted on a quick-change fixture.
- The mandrel is accurately centered by the clamping sleeve mounted on the base flange.
- Radial clamping force is applied manually.
- Hydraulic pressure is supplied directly by the machine tool.
- Workpieces of different diameters can be accommodated by replacing the transition clamping sleeve.
- The workpiece runout accuracy can reach 0.003 mm.

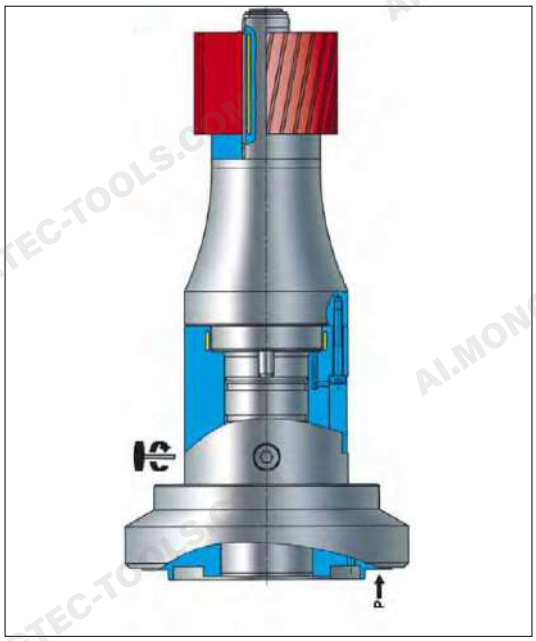

Application Examples

LIEBHERR

KOEPFER EMAG

EMAG

KLINGELNBERG

Gleason

FELSOMAT®

REISHAUER

KAPP NILES

Facebook WeChat YouTube Mongtec Web LINE WhatsApp

Mongtec Precision Inc.

TEL : +886-4-22653360

FAX : +886-4-22653386

E-mail : info@mongtec.com

No. 87, Sec. 1, Daqing St., South Dist., Taichung City 402024, Taiwan (R.O.C.)