MONGTEC®
CNC職人のこだわり

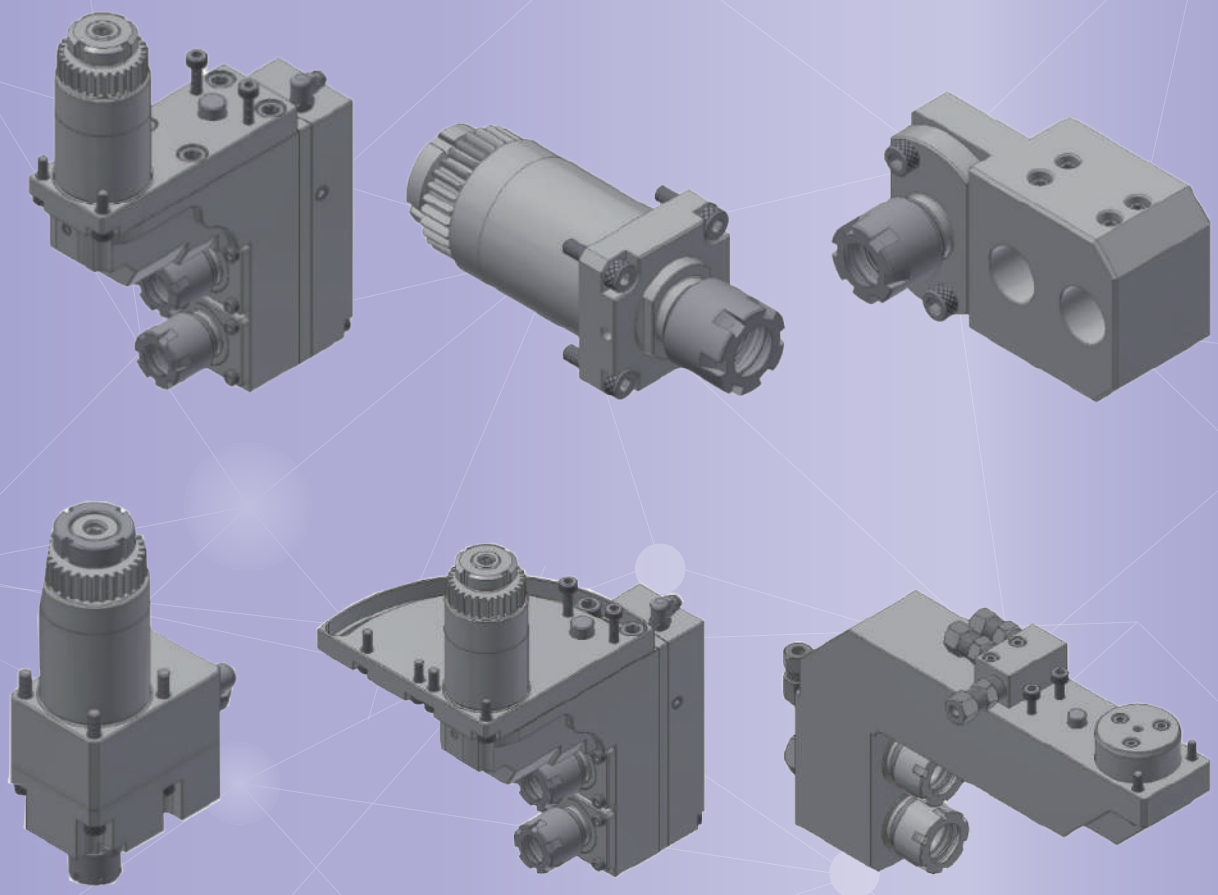

# STAR
# Swiss Type Toolholders

ai.mongtec-tools.com | mongtec-tools.com | info@mongtec.com

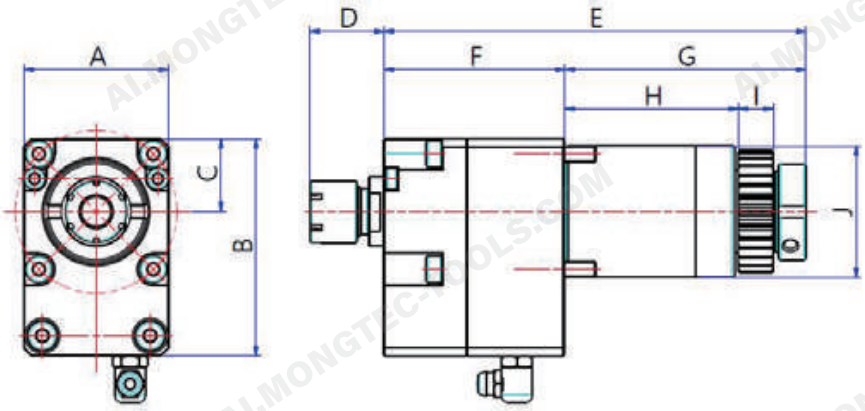

| 3x-Speed Radial Milling Live Tool Holder | | | |
|---|---|---|---|
| **Model** | SR20R-23310 | **STAR Part No.** | - |
| **Gear Ratio** | 1 / 3 | **Max. Speed** | 18000 rpm |
| **Max. Collet Dia.** | 7 mm | | |
| **Collet** | AR11-M, ER11-M | | |
| **Compatible Machines** | ECAS12/ECAS20/SB12R/SB20R/ SR20J/SR20RIII/SR20RIV/ SR32J/SR32JII(TYPE A/B)/ SV12/SV20/SV32JII/SV32/SV38R/SW20 | | |

| Model | A | B | C | D | E | F | G | H | I | J |
|---|---|---|---|---|---|---|---|---|---|---|
| SR20R-23310 | 37.6 | 56 | 18.8 | 19.2 | 109.5 | 47 | 62.5 | 45 | 9 | Ø34 |

Unit: mm

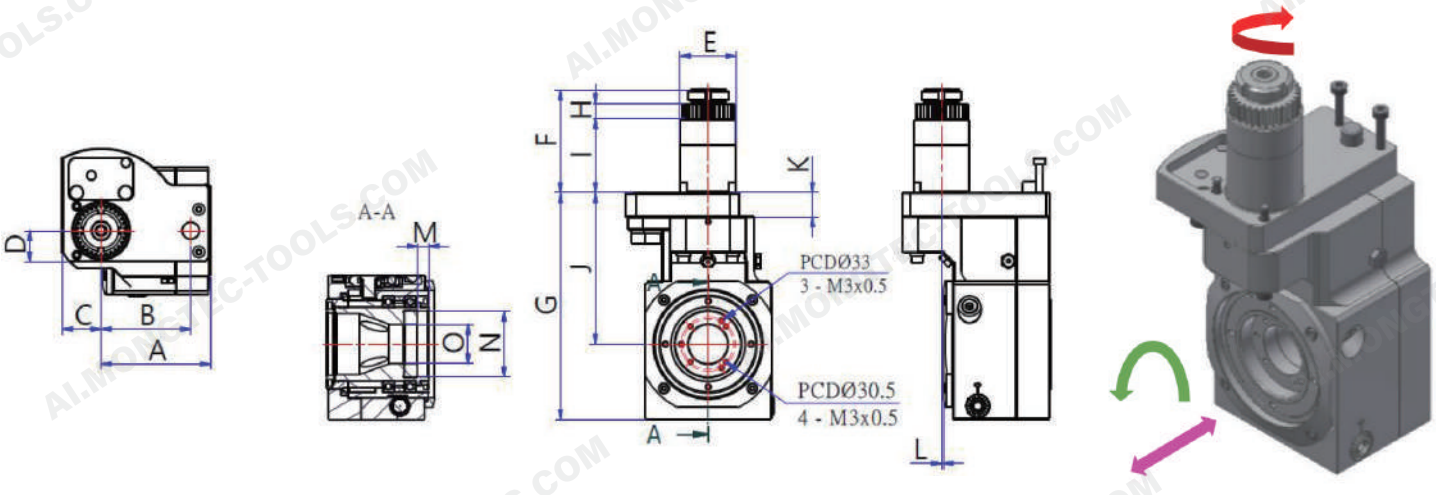


| Internal Whirling Tool Holder | | | |
|---|---|---|---|
| **Model** | SR20R-25510 | **STAR Part No.** | 681-72 |
| **Gear Ratio** | 1 / 1 | **Max. Speed** | 4000 rpm |
| **Insert Holder Adjustment** | 8 mm | **Angle Range** | ±20° |
| **Patent No.** | M551538 | | |
| **China Patent No.** | ZL 2017 2 0883420. 8 | | |
| **Compatible Machines** | SR20J/SR20RIII/SR20RIV/ SR32J/SR32JII(TYPE A/B)/SW20 | | |

| Model | A | B | C | D | E | F | G | H | I | J | K | L | M | N | O |
|---|---|---|---|---|---|---|---|---|---|---|---|---|---|---|---|
| SR20R-25510 | 66.5 | 54.5 | 23.5 | 18.75 | Ø34 | 62.5 | 138 | 9 | 45 | 92 | 14.5 | 1 | 7 | Ø40 | Ø24 |

Unit: mm

Specifications and dimensions are for reference only and subject to change without notice. Please confirm the latest specifications before ordering.

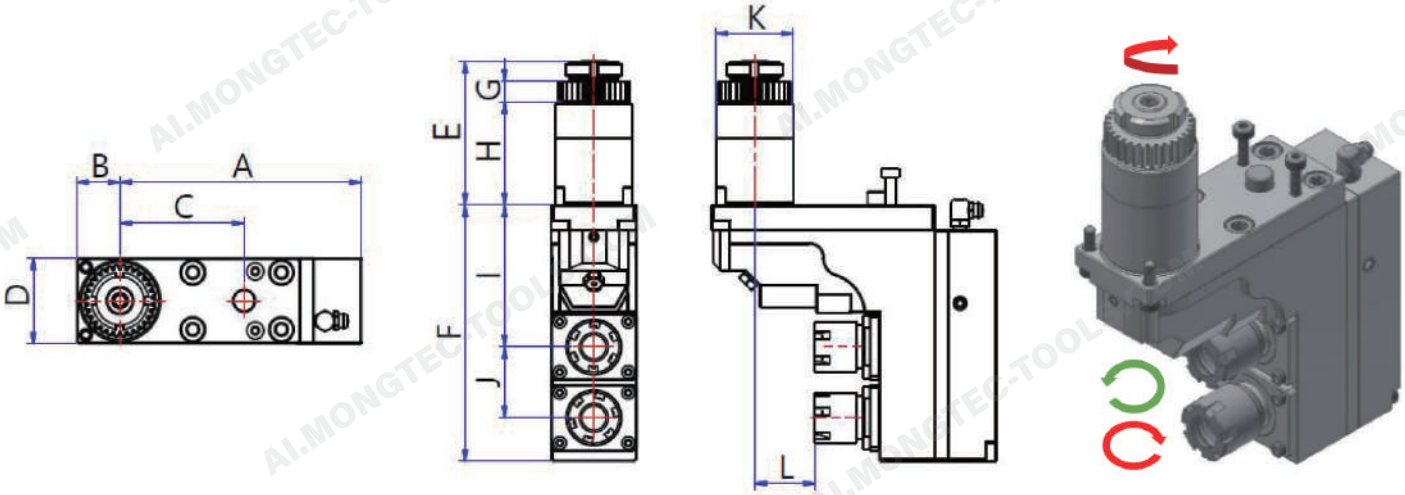


| Axial Live Tool Holder | | | |
|---|---|---|---|
| **Model** | SR20R-20120 | **STAR Part No.** | 541-51 |
| **Gear Ratio** | 1 / 1 | **Max. Speed** | 6000 rpm |
| **Max. Collet Dia.** | 10 mm | | |
| **Collet** | Main Spindle: AR16-M, ER16-M | | |
| **Compatible Machines** | SB12R/SB20R/SR20J/SR20RIII/SR20RIV | | |

| Model | A | B | C | D | E | F | G | H | I | J | K | L |
|---|---|---|---|---|---|---|---|---|---|---|---|---|
| SR20R-20120 | 106 | 19 | 54.5 | 37.5 | 62.5 | 112 | 9 | 45 | 62 | 31 | Ø34 | 26.5 |

Unit: mm

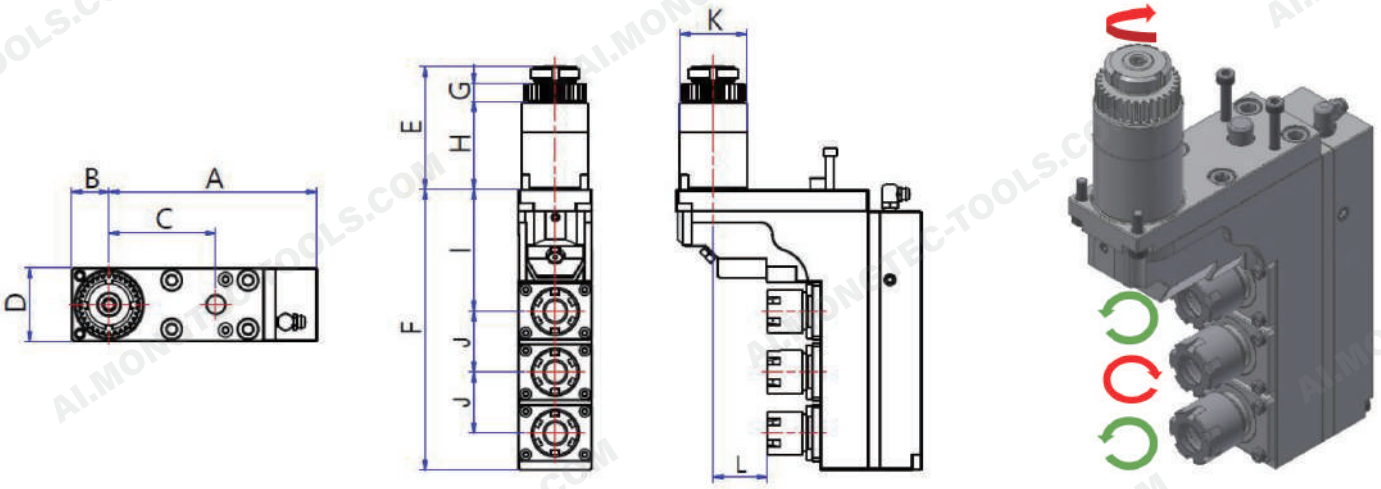


| Axial Live Tool Holder | | | |
|---|---|---|---|
| **Model** | SR20R-20130 | **STAR Part No.** | 661-51 |
| **Gear Ratio** | 1 / 1 | **Max. Speed** | 6000 rpm |
| **Max. Collet Dia.** | 10 mm | | |
| **Collet** | Main Spindle: AR16-M, ER16-M | | |
| **Compatible Machines** | SB12R/SB20R/SR20J/SR20RIII/SR20RIV | | |

| Model | A | B | C | D | E | F | G | H | I | J | K | L |
|---|---|---|---|---|---|---|---|---|---|---|---|---|
| SR20R-20130 | 106 | 19 | 54.5 | 37.5 | 62.5 | 143 | 9 | 45 | 62 | 31 | Ø34 | 27.5 |

Unit: mm

Specifications and dimensions are for reference only and subject to change without notice. Please confirm the latest specifications before ordering.

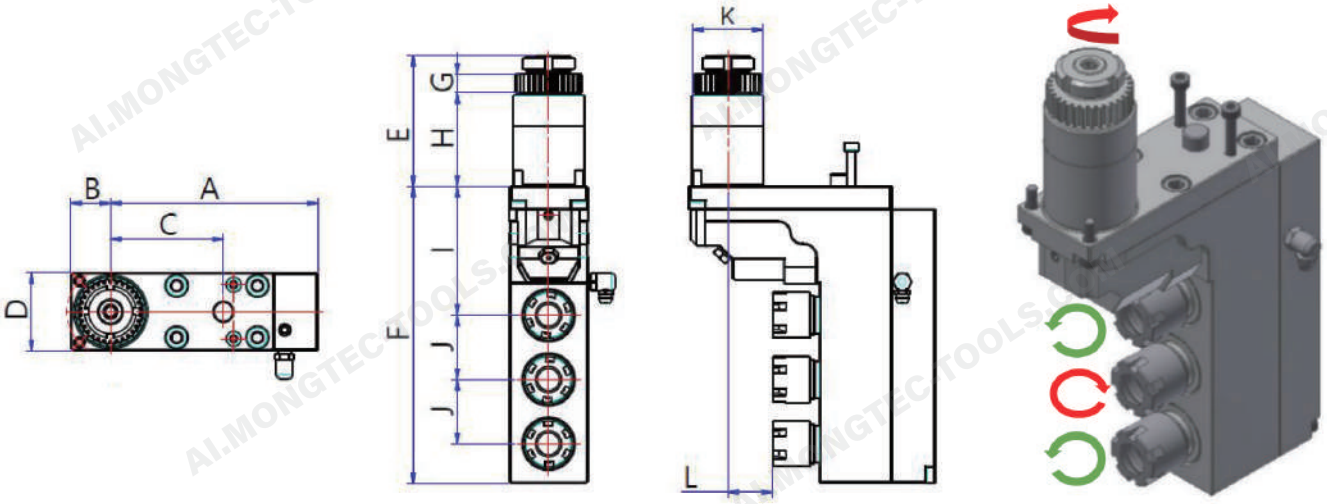


| Axial Live Tool Holder | | | |
|---|---|---|---|
| **Model** | SR20R-20130-1 | **STAR Part No.** | 661-51 |
| **Gear Ratio** | 1 / 1 | **Max. Speed** | 6000 rpm |
| **Max. Collet Dia.** | 10 mm | | |
| **Collet** | Main Spindle: AR16-M, ER16-M | | |
| **Compatible Machines** | SB12R/SB20R/SR20J/SR20RIII/SR20RIV | | |

| Model | A | B | C | D | E | F | G | H | I | J | K | L |
|---|---|---|---|---|---|---|---|---|---|---|---|---|
| SR20R-20130-1 | 100 | 19 | 54.5 | 37.5 | 63 | 143 | 9 | 45 | 62 | 31 | Ø34 | 21.5 |

Unit: mm

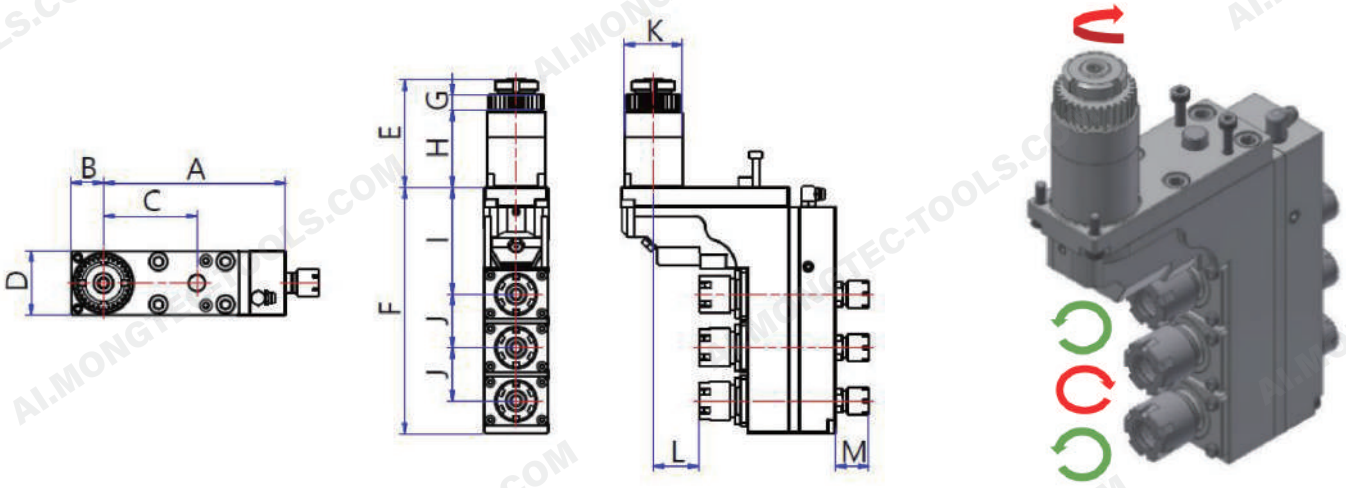


| Axial Live Tool Holder | | | |
|---|---|---|---|
| **Model** | SR20R-21130 | **STAR Part No.** | OM1-55 |
| **Gear Ratio** | 1 / 1 | **Max. Speed** | 6000 rpm |
| **Max. Collet Dia.** | 10 mm / 7mm | | |
| **Collet** | Main Spindle: AR16-M, ER16-M<br>Sub Spindle: AR11-M, ER11-M | | |
| **Compatible Machines** | SB16R/SB20R TYPE C / SB20R TYPE G | | |

| Model | A | B | C | D | E | F | G | H | I | J | K | L | M |
|---|---|---|---|---|---|---|---|---|---|---|---|---|---|
| SR20R-21130 | 106 | 19 | 54.5 | 37.5 | 62.5 | 143 | 9 | 45 | 62 | 31 | Ø34 | 26.5 | 19.2 |

Unit: mm

Specifications and dimensions are for reference only and subject to change without notice. Please confirm the latest specifications before ordering.

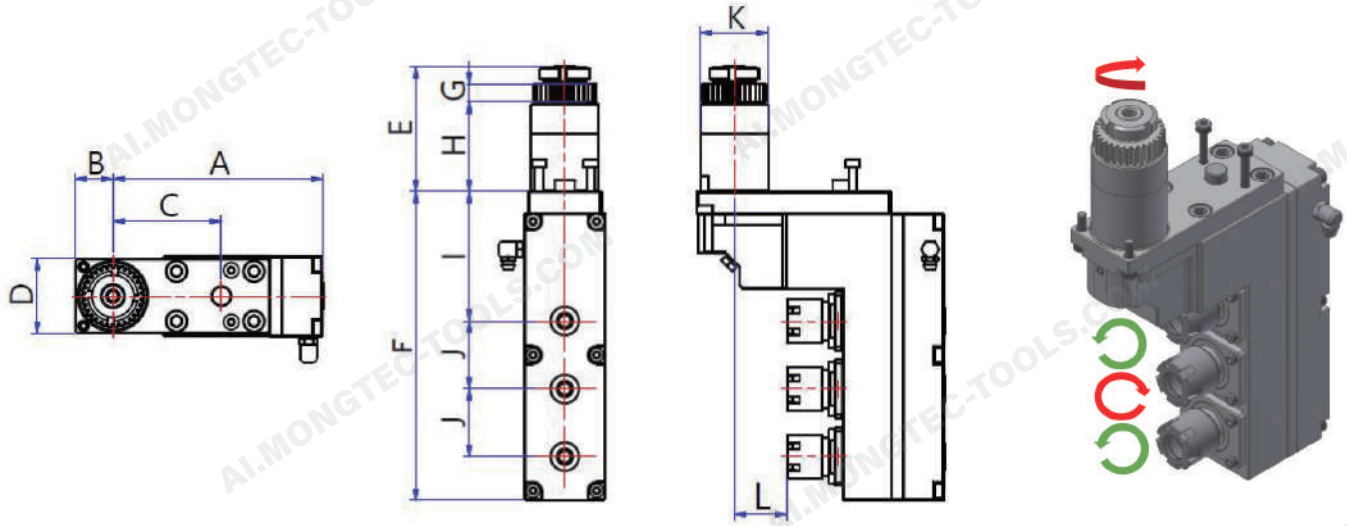


| Axial Live Tool Holder | | | |
|---|---|---|---|
| **Model** | SR32J-20130 | **STAR Part No.** | 671-51 |
| **Gear Ratio** | 1 / 1 | **Max. Speed** | 6000 rpm |
| **Max. Collet Dia.** | 10 mm | | |
| **Collet** | Main Spindle: AR16-M, ER16-M | | |
| **Compatible Machines** | SR32J/SR32JII(TYPE A/B) | | |

| Model | A | B | C | D | E | F | G | H | I | J | K | L |
|---|---|---|---|---|---|---|---|---|---|---|---|---|
| SR32J-20130 | 10.5.5 | 19 | 54.5 | 37.5 | 62.5 | 155 | 9 | 45 | 65 | 34 | Ø34 | 26.5 |

Unit: mm

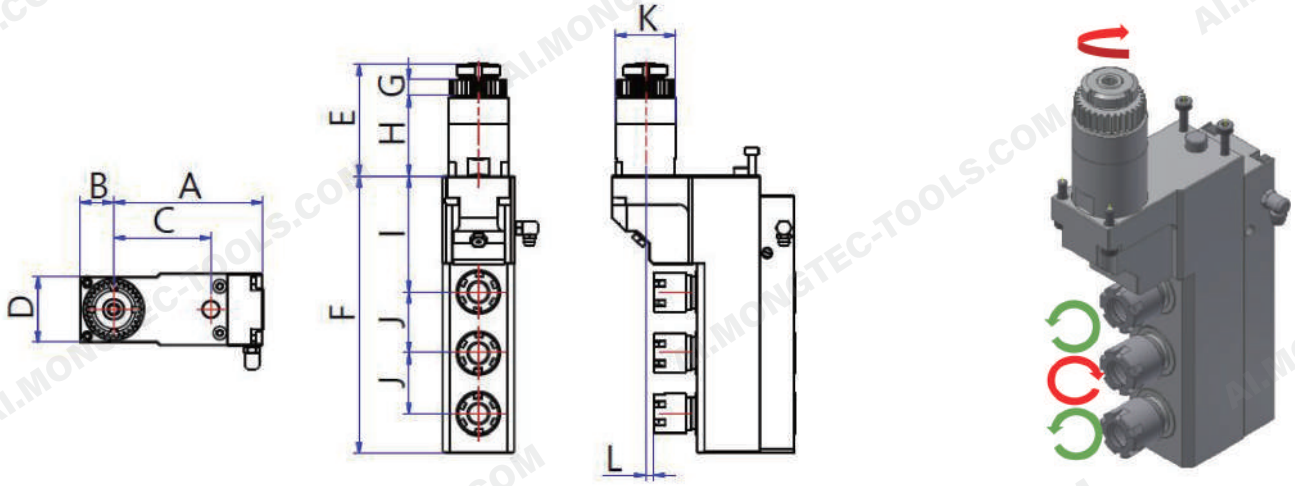


| Axial Live Tool Holder | | | |
|---|---|---|---|
| **Model** | SR32J-20130-1 | **STAR Part No.** | 671-51 |
| **Gear Ratio** | 1 / 1 | **Max. Speed** | 6000 rpm |
| **Max. Collet Dia.** | 10 mm | | |
| **Collet** | Main Spindle: AR16-M, ER16-M | | |
| **Compatible Machines** | SR32J/SR32JII(TYPE A/B) | | |

| Model | A | B | C | D | E | F | G | H | I | J | K | L |
|---|---|---|---|---|---|---|---|---|---|---|---|---|
| SR32J-20130-1 | 83.5 | 19 | 54.5 | 36.5 | 62.5 | 155 | 9 | 45 | 65 | 34 | Ø34 | 4.5 |

Unit: mm

Specifications and dimensions are for reference only and subject to change without notice. Please confirm the latest specifications before ordering.

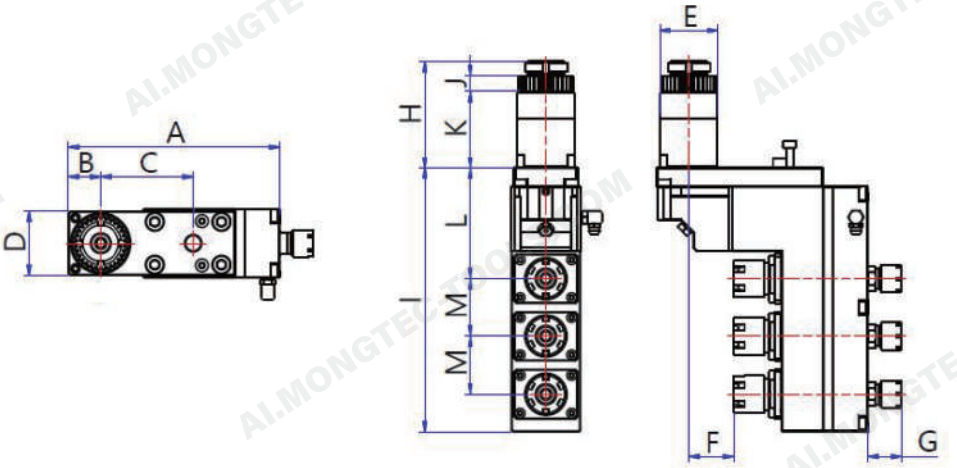


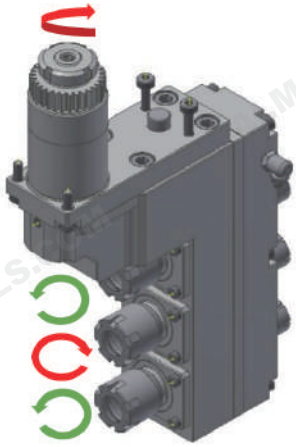

| Axial Live Tool Holder | | | |
|---|---|---|---|
| **Model** | SR32J-21130 | **STAR Part No.** | 671-59 |
| **Gear Ratio** | 1 / 1 | **Max. Speed** | 6000 rpm |
| **Max. Collet Dia.** | 10 mm / 7 mm | | |
| **Collet** | Main Spindle: AR16-M, ER16-M<br>Sub Spindle: AR11-M, ER11-M | | |
| **Compatible Machines** | SR32J / SR32JN | | |

| Model | A | B | C | D | E | F | G | H | I | J | K | L | M |
|---|---|---|---|---|---|---|---|---|---|---|---|---|---|
| SR32J-21130 | 124.5 | 19 | 54.5 | 37.5 | Ø34 | 26.5 | 19.7 | 62.5 | 155 | 9 | 45 | 65 | 34 |

Unit: mm

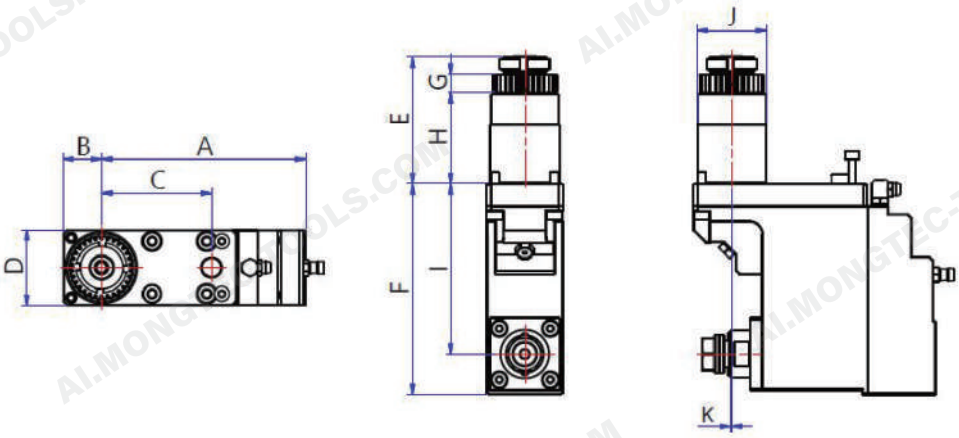


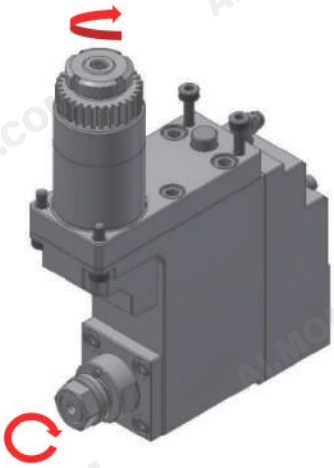

| Polygon Milling Tool Holder | | | |
|---|---|---|---|
| **Model** | SR20RIV-10810 | **STAR Part No.** | 671-91 |
| **Gear Ratio** | 1: 0.6 | **Max. Speed** | 6000 rpm |
| **Cutter** | KT130480058 | **Insert Shaft O.D.** | Ø13mm |
| **Compatible Machines** | SR32J/SR32JII(TYPE A/B) | | |

| Model | A | B | C | D | E | F | G | H | I | J | K |
|---|---|---|---|---|---|---|---|---|---|---|---|
| SR20RIV-10810 | 101 | 19 | 54.5 | 37.5 | 62.5 | 104.25 | 9 | 45 | 84.25 | Ø34 | 0.6 |

Unit: mm

Specifications and dimensions are for reference only and subject to change without notice. Please confirm the latest specifications before ordering.

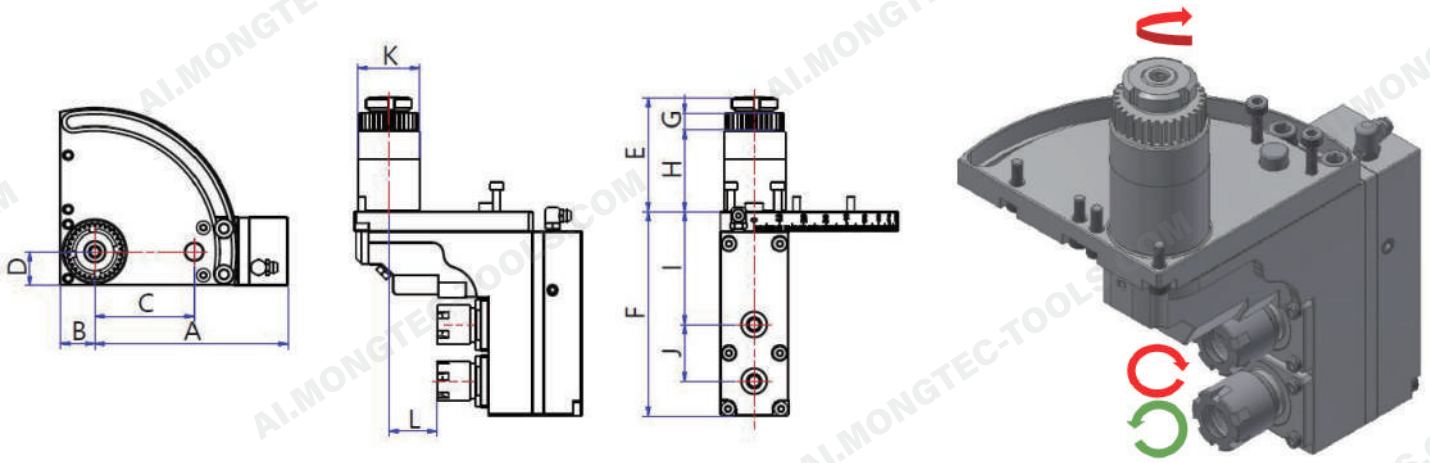


| Adjustable-Angle Axial Live Tool Holder | | | |
|---|---|---|---|
| **Model** | SR20R-25020 | **STAR Part No.** | - |
| **Gear Ratio** | 1 / 1 | **Max. Speed** | 6000rpm |
| **Max. Collet Dia.** | 10 mm | **Angle Range** | 0 ~ 90° |
| **Collet** | Main Spindle: AR16-M, ER16-M | | |
| **Compatible Machines** | SB12R/SB20R/SR20J/SR20RIII/SR20RIV | | |

| Model | A | B | C | D | E | F | G | H | I | J | K | L |
|---|---|---|---|---|---|---|---|---|---|---|---|---|
| SR20R-25020 | 106 | 19 | 54.5 | 18.75 | 62.5 | 112 | 9 | 45 | 62 | 31 | Ø34 | 26.5 |

Unit: mm

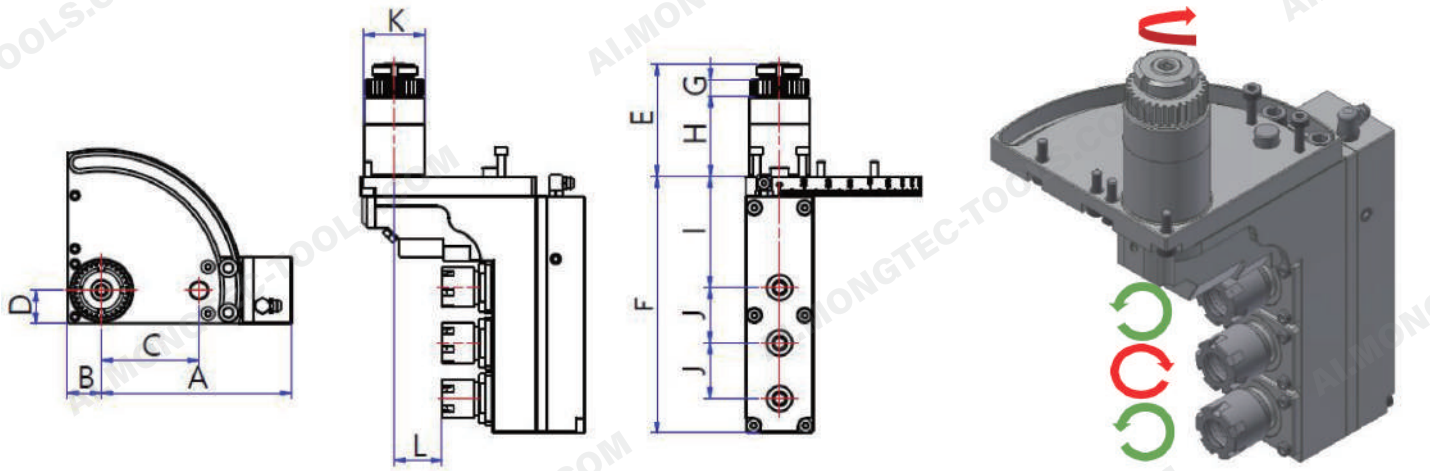


| Adjustable-Angle Axial Live Tool Holder | | | |
|---|---|---|---|
| **Model** | SR20R-25030 | **STAR Part No.** | - |
| **Gear Ratio** | 1 / 1 | **Max. Speed** | 6000 rpm |
| **Max. Collet Dia.** | 10 mm | **Angle Range** | 0 ~ 90° |
| **Collet** | Main Spindle: AR16-M, ER16-M | | |
| **Compatible Machines** | SB12R/SB20R/SR20J/SR20RIII/SR20RIV | | |

| Model | A | B | C | D | E | F | G | H | I | J | K | L |
|---|---|---|---|---|---|---|---|---|---|---|---|---|
| SR20R-25030 | 106 | 19 | 54.5 | 18.75 | 62.5 | 143 | 9 | 45 | 62 | 31 | Ø34 | 26.5 |

Unit: mm

Specifications and dimensions are for reference only and subject to change without notice. Please confirm the latest specifications before ordering.

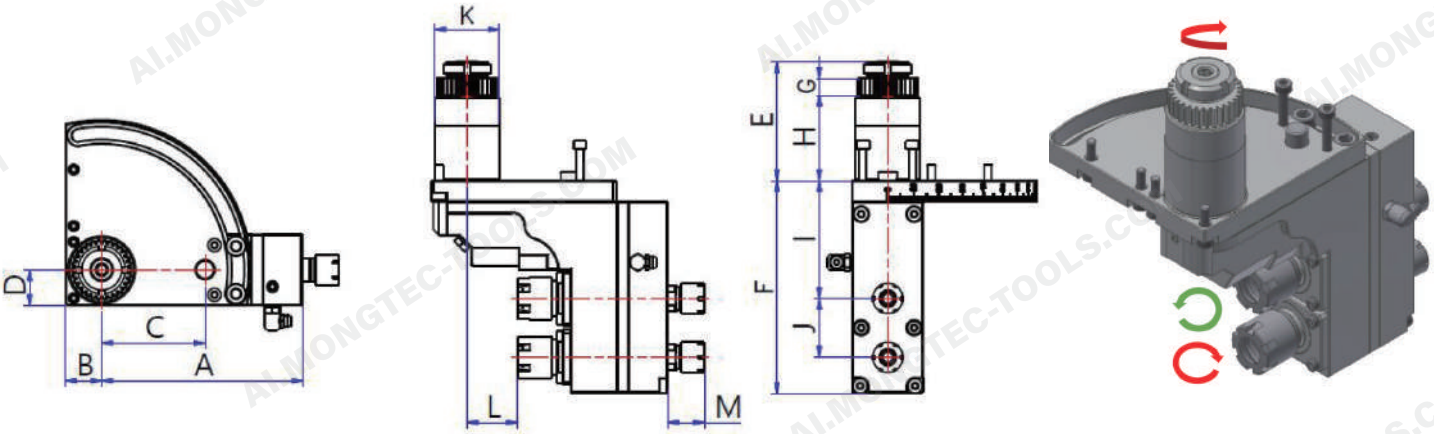


| Adjustable-Angle Axial Live Tool Holder | | | |
|---|---|---|---|
| **Model** | SR20R-25120 | **STAR Part No.** | - |
| **Gear Ratio** | 1 / 1 | **Max. Speed** | 6000 rpm |
| **Max. Collet Dia.** | 10 mm / 7mm | **Angle Range** | 0 ~ 90° |
| **Collet** | Main Spindle: AR16-M, ER16-M<br>Sub Spindle: AR11-M, ER11-M | | |
| **Compatible Machines** | SB12R/SB20R/SR20J/SR20RIII/SR20RIV | | |

| Model | A | B | C | D | E | F | G | H | I | J | K | L | M |
|---|---|---|---|---|---|---|---|---|---|---|---|---|---|
| SR20R-25120 | 106 | 19 | 54.5 | 18.75 | 62.5 | 112 | 9 | 45 | 62 | 31 | Ø34 | 26.5 | 19.2 |

Unit: mm

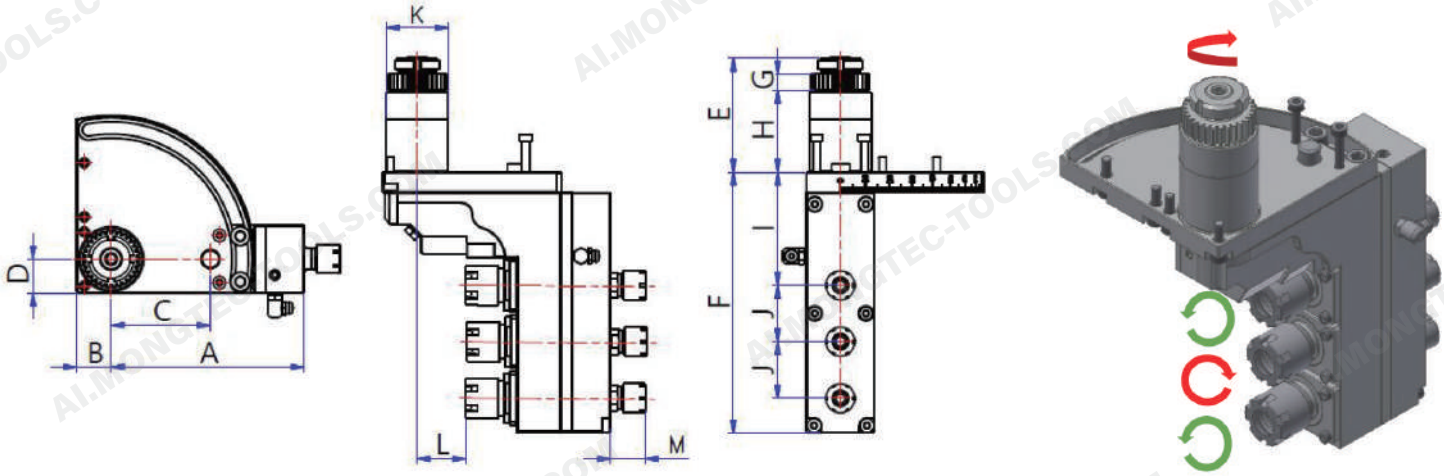


| Adjustable-Angle Axial Live Tool Holder | | | |
|---|---|---|---|
| **Model** | SR20R-25130 | **STAR Part No.** | - |
| **Gear Ratio** | 1 / 1 | **Max. Speed** | 6000 rpm |
| **Max. Collet Dia.** | 10mm / 7mm | **Angle Range** | 0 ~ 90° |
| **Collet** | Main Spindle: AR16-M, ER16-M<br>Sub Spindle: AR11-M, ER11-M | | |
| **Compatible Machines** | SR20RIV/SR32J/SR32JII(TYPE A/B) | | |

| Model | A | B | C | D | E | F | G | H | I | J | K | L | M |
|---|---|---|---|---|---|---|---|---|---|---|---|---|---|
| SR20R-25130 | 106 | 19 | 54.5 | 18.75 | 62.5 | 143 | 9 | 45 | 62 | 31 | Ø34 | 26.5 | 19.2 |

Unit: mm

Specifications and dimensions are for reference only and subject to change without notice. Please confirm the latest specifications before ordering.

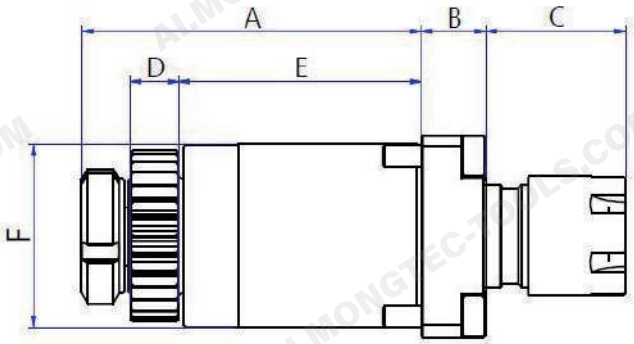


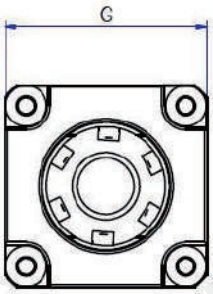


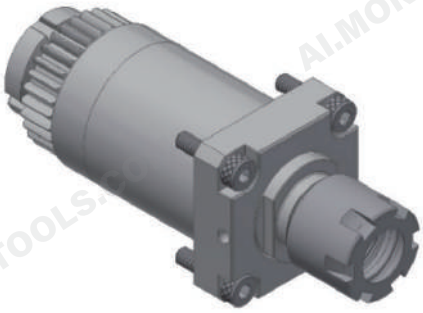

| Straight-Shank Live Tool Holder | | | |
|---|---|---|---|
| **Model** | SR20R-20310 | **STAR Part No.** | 331-50 |
| **Gear Ratio** | 1 / 1 | **Max. Speed** | 6000 rpm |
| **Max. Collet Dia.** | 10 mm | | |
| **Collet** | AR16-M, ER16-M | | |
| **Compatible Machines** | ECAS12/ECAS20/SB12R/SB20R/SR20J/SR20RIII/ SR20RIV/SR32J/SR32JII(TYPE A/B)/ SV12/SV20/SV32JII/SV32/SV38R/SW20 | | |

| Model | A | B | C | D | E | F | G |
|---|---|---|---|---|---|---|---|
| SR20R-20310 | 63 | 12 | 26 | 9 | 45 | Ø34 | □37.6 |

Unit: mm

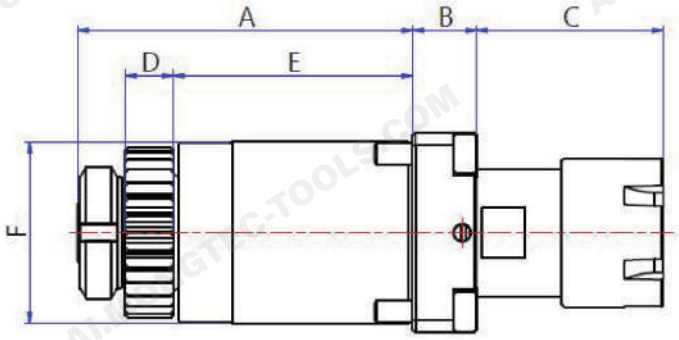


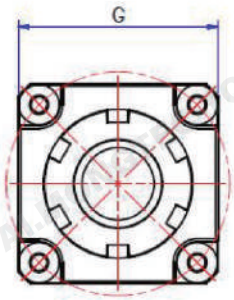

| Straight-Shank Live Tool Holder | | | |
|---|---|---|---|
| **Model** | SR20R-20310-1 | **STAR Part No.** | - |
| **Gear Ratio** | 1 / 1 | **Max. Speed** | 8000 rpm |
| **Max. Collet Dia.** | 13 mm | | |
| **Collet** | AR20-M, ER20-M | | |
| **Compatible Machines** | SR20J/SR20RIII/SR20RIV/SR32J/SR32JII(TYPE A/B)/SV12/SV20/SV32JII/SV32/SV38R/ SW20 | | |

| Model | A | B | C | D | E | F | G |
|---|---|---|---|---|---|---|---|
| SR20R-20310-1 | 63 | 12 | 35 | 9 | 45 | Ø34 | □37.6 |

Unit: mm

Specifications and dimensions are for reference only and subject to change without notice. Please confirm the latest specifications before ordering.

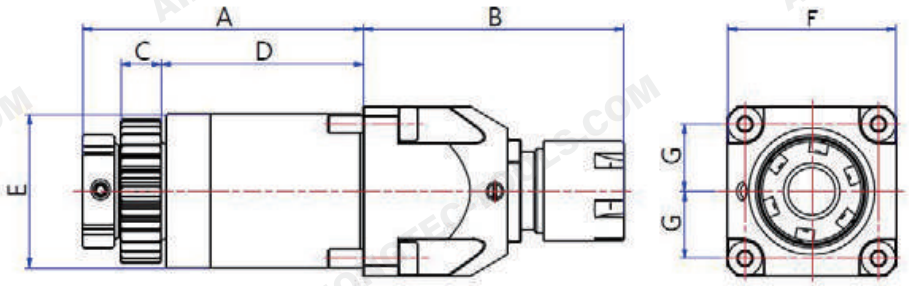


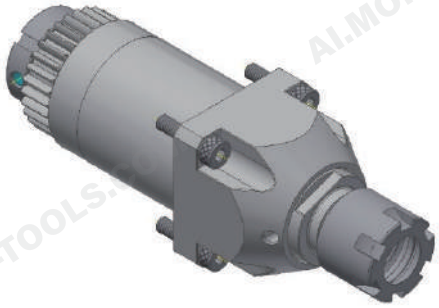

| Straight-Shank Live Tool Holder | | | |
|---|---|---|---|
| **Model** | SR20R-20310-2 | **STAR Part No.** | 571-55 |
| **Gear Ratio** | 1 / 1 | **Max. Speed** | 8000 rpm |
| **Max. Collet Dia.** | 10 mm | | |
| **Collet** | AR16-M, ER16-M | | |
| **Compatible Machines** | ECAS20 / ECAS2 / SR20RIII / SR20RIV / SR20J / SR32J | | |

| Model | A | B | C | D | E | F | G |
|---|---|---|---|---|---|---|---|
| SR20R-20310-2 | 62.5 | 58 | 9 | 45 | Ø34 | □37.5 | 14.85 |

Unit: mm

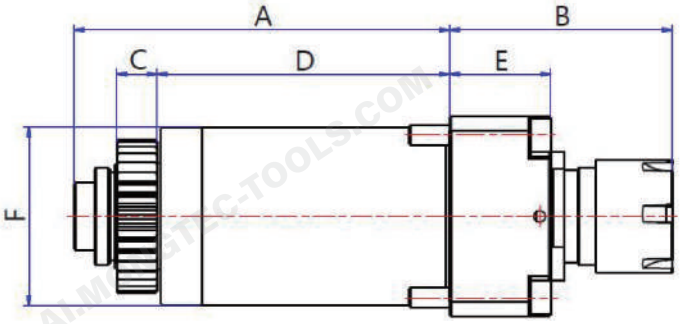


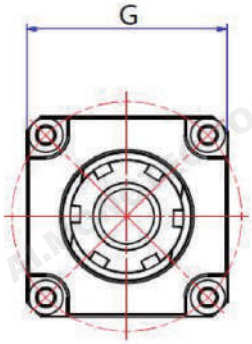


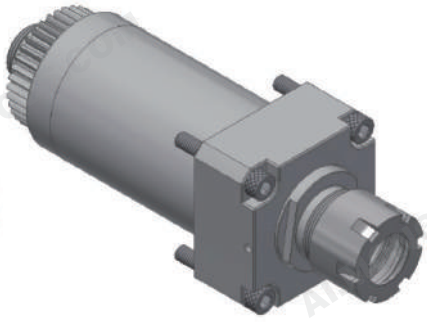

| Straight-Shank Live Tool Holder | | | |
|---|---|---|---|
| **Model** | SR38-20310 | **STAR Part No.** | 101-68 |
| **Gear Ratio** | 1 / 1 | **Max. Speed** | 6000 rpm |
| **Max. Collet Dia.** | 13 mm | | |
| **Collet** | AR20-M, ER20-M | | |
| **Compatible Machines** | SR38 | | |

| Model | A | B | C | D | E | F | G |
|---|---|---|---|---|---|---|---|
| SR38-20310 | 92.5 | 55 | 10 | 72 | 25 | Ø44 | 49.5 |

Unit: mm

Specifications and dimensions are for reference only and subject to change without notice. Please confirm the latest specifications before ordering.

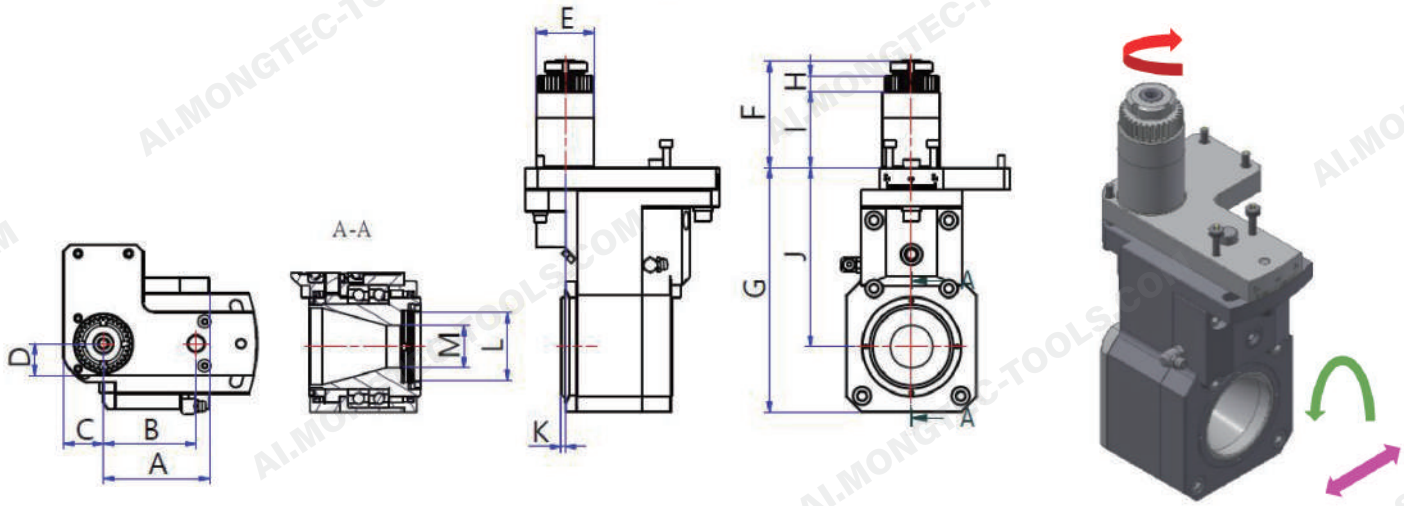


| Whirling Tool Holder | | | |
|---|---|---|---|
| **Model** | SR20R-20510-1 | **STAR Part No.** | 4000 rpm |
| **Gear Ratio** | 1 / 1 | **Max. Speed** | |
| **Insert Holder Adjustment** | - | **Angle Range** | ±15° |
| **Cutter** | Schwanog (Ahlnlich wie 193175) | | |
| **Compatible Machines** | ECAS 12 / 20, SR20RII, SR20RIII, SR20J / JN, SR20RIV, SR32J / JN, SW20 | | |

| Model | A | B | C | D | E | F | G | H | I | J | K | L | M |
|---|---|---|---|---|---|---|---|---|---|---|---|---|---|
| SR20R-20510-1 | 62.5 | 54.5 | 23.5 | 18.75 | Ø34 | 62.5 | 143.5 | 9 | 45 | 105 | 2.5 | Ø40 | Ø25 |

Unit: mm

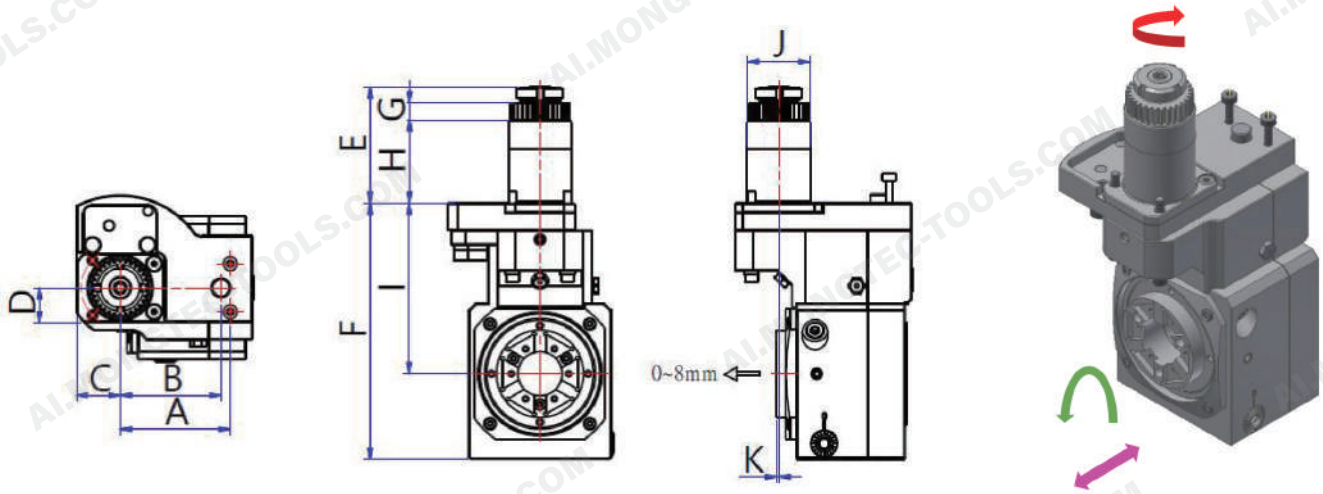


| Whirling Tool Holder | | | |
|---|---|---|---|
| **Model** | SR20R-25510-1 | **STAR Part No.** | - |
| **Gear Ratio** | 1 / 1 | **Max. Speed** | 4000 rpm |
| **Insert Holder Adjustment** | 0~8 mm | **Angle Range** | 0~20° |
| **Cutter** | SIMCUT(CF5.DD40.12.06) | | |
| **Compatible Machines** | - | | |

| Model | A | B | C | D | E | F | G | H | I | J | K |
|---|---|---|---|---|---|---|---|---|---|---|---|
| SR20R-25510-1 | 59.5 | 54.5 | 23.5 | 18.75 | 62.5 | 138 | 9 | 45 | 92 | Ø34 | 1.1 |

Unit: mm

Specifications and dimensions are for reference only and subject to change without notice. Please confirm the latest specifications before ordering.

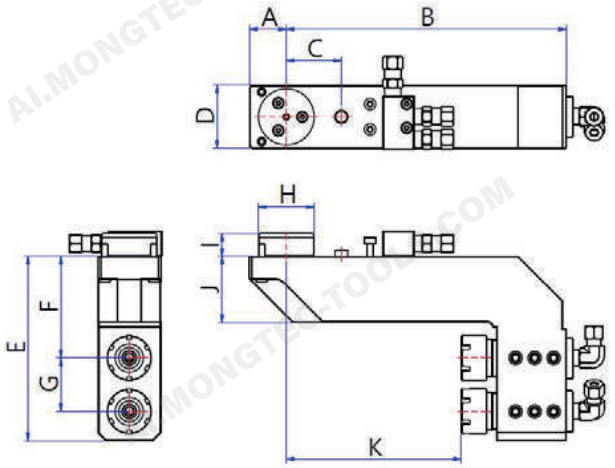


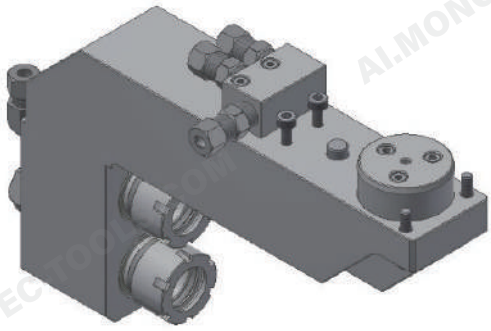

| Deep-Hole Drilling Holder | | | |
|---|---|---|---|
| **Model** | SR38-12021 | **STAR Part No.** | - |
| **Gear Ratio** | 1 / 1 | **Max. Speed** | - |
| **Max. Collet Dia.** | | **Angle Range** | - |
| **Collet** | ER25-M | | |
| **Compatible Machines** | SR38 | | |

| Model | A | B | C | D | E | F | G | H | I | J | K |
|---|---|---|---|---|---|---|---|---|---|---|---|
| SR38-12021 | 29 | 221 | 43.5 | 49.5 | 145 | 80 | 42 | Ø44 | 18 | 52 | 138 |

Unit: mm

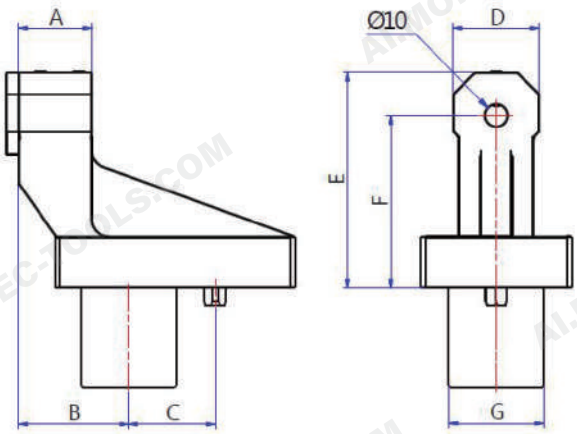


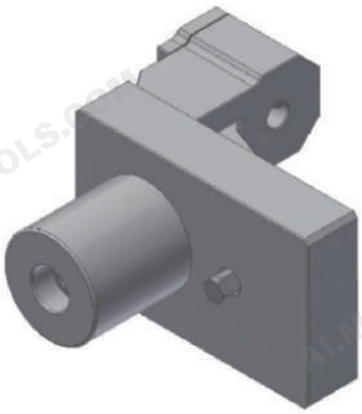

| Deep-Hole Drilling Holder | | | |
|---|---|---|---|
| **Model** | SV32-02011 | **STAR Part No.** | 221-10 |
| **Gear Ratio** | - | **Max. Speed** | - |
| **Max. Collet Dia.** | - | **Bore Dia.** | Ø10 mm |
| **Collet** | - | | |
| **Compatible Machines** | ST-20 / ECAS-20T, SV-20R, SV-32JII | | |

| Model | A | B | C | D | E | F | G |
|---|---|---|---|---|---|---|---|
| SV32-02011 | 34 | 51 | 40 | 40 | 100 | 80 | Ø44 |

Unit: mm

Specifications and dimensions are for reference only and subject to change without notice. Please confirm the latest specifications before ordering.

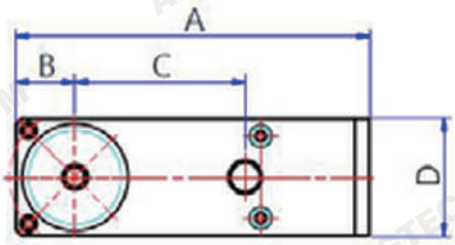


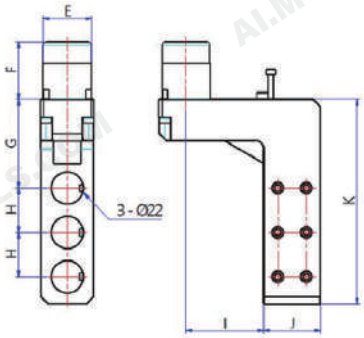


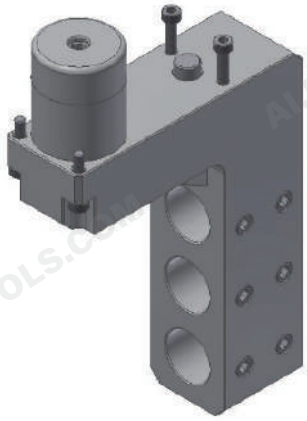

| Drilling Holder | | | |
|---|---|---|---|
| **Model** | SR20R-11030 | **STAR Part No.** | - |
| **Gear Ratio** | - | **Max. Speed** | - |
| **Max. Collet Dia.** | - | **Bore Dia.** | Ø22 mm |
| **Collet** | - | | |
| **Compatible Machines** | SR20J/SR20RIII/SR20RIV | | |

| Model | A | B | C | D | E | F | G | H | I | J | K |
|---|---|---|---|---|---|---|---|---|---|---|---|
| SR20R-11030 | 113.5 | 19 | 54.5 | 37.5 | Ø34 | 40 | 62 | 31 | 54.5 | 40 | 143 |

Unit: mm

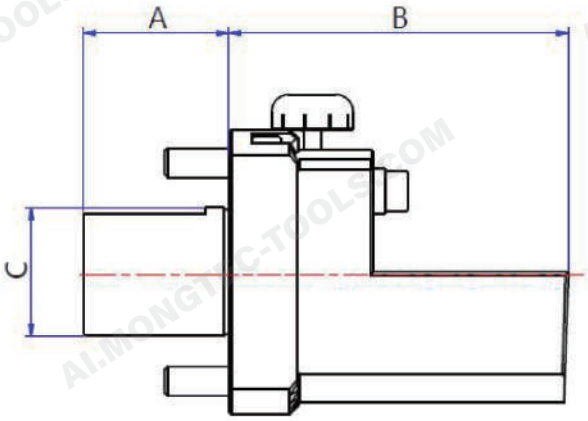


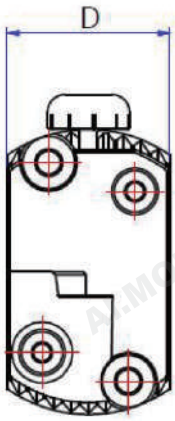


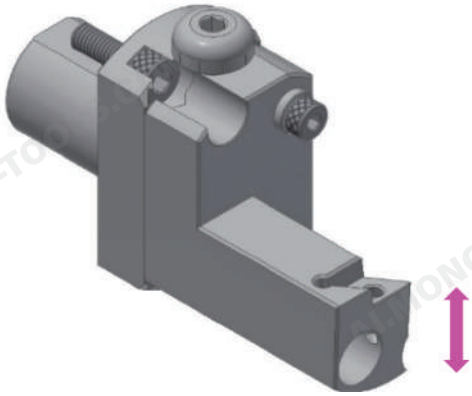

| Turning Tool Holder | | | |
|---|---|---|---|
| **Model** | SR20R-51510 | **STAR Part No.** | - |
| **Gear Ratio** | - | **Max. Speed** | - |
| **Vertical Adjustment** | ±1.0 mm | **Angle Range** | - |
| **Turning Insert** | Mitsubishi(DCM11T302) | | |
| **Compatible Machines** | ECAS12/ECAS20/SB12R/SB20R/SR10J/ SR20J/SR20RIII/SR20RIV/SR32J/SR32JII(TYPE A)/SW12RII | | |

| Model | A | B | C | D |
|---|---|---|---|---|
| SR20R-51510 | 25 | 58.52 | Ø22 | 28 |

Unit: mm

Specifications and dimensions are for reference only and subject to change without notice. Please confirm the latest specifications before ordering.

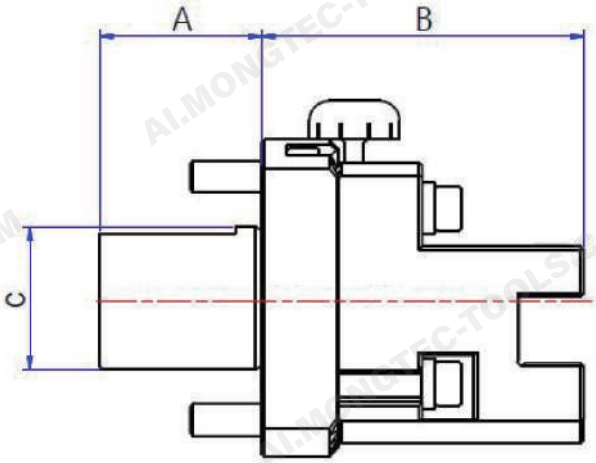


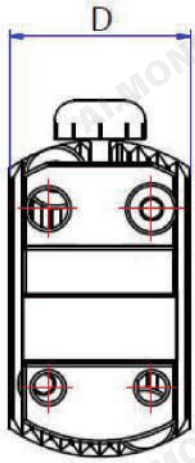


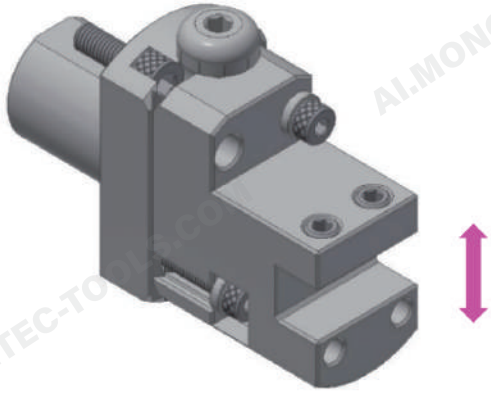

| Turning Tool Holder | | | |
|---|---|---|---|
| **Model** | SR20R-51510-1 | **STAR Part No.** | - |
| **Gear Ratio** | - | **Max. Speed** | - |
| **Vertical Adjustment** | ±1.0 mm | **Tool Shank Size** | □10 mm |
| **Turning Insert** | - | | |
| **Compatible Machines** | ECAS12/ECAS20/SB12R/SB20R/SR10J/ SR20J/SR20RIII/SR20RIV/SR32J/SR32JII(TYPE A)/SW12RII | | |

| Model | A | B | C | D |
|---|---|---|---|---|
| SR20R-51510-1 | 25 | 49.9 | Ø22 | 28 |

Unit: mm

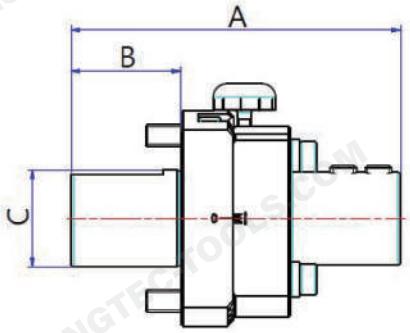


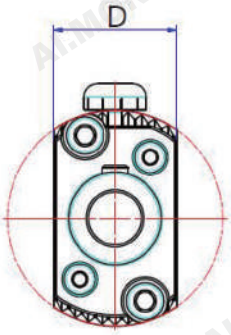


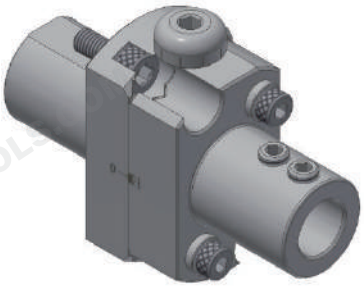

| Turning Tool Holder | | | |
|---|---|---|---|
| **Model** | SR20R-51510-2 | **STAR Part No.** | - |
| **Gear Ratio** | - | **Max. Speed** | - |
| **Vertical Adjustment** | ±1.0 mm | **Tool Shank Size** | □10 mm |
| **Turning Insert** | - | | |
| **Compatible Machines** | ECAS12/ECAS20/SB12R/SB20R/SR10J/ SR20J/SR20RIII/SR20RIV/SR32J/SR32JII(TYPE A)/SW12RII | | |

| Shank Dia. ØD | Set Screw |
|---|---|
| Ø6 | M6X8 |
| Ø8 | ZLM0640060 |
| Ø10 | ZLM0640060 |
| Ø12 | ZLM0640060 |

| Model | A | B | C | D |
|---|---|---|---|---|
| SR20R-51510-2 | 74.9 | 25 | Ø22 | 28 |

Unit: mm

Specifications and dimensions are for reference only and subject to change without notice. Please confirm the latest specifications before ordering.

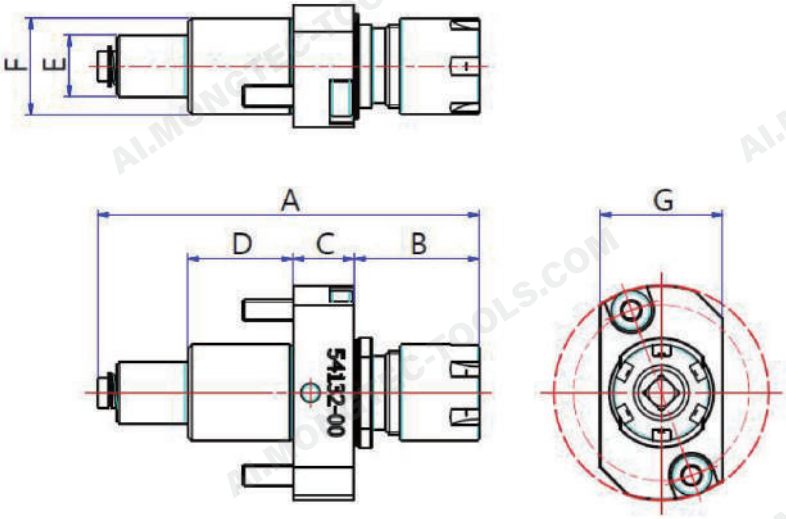

| Backworking Tapping Holder | | | |
|---|---|---|---|
| **Model** | SR20R-31610 | **STAR Part No.** | 541-32 |
| **Gear Ratio** | - | **Max. Speed** | - |
| **Max. Collet Dia.** | 10 mm | **Max. Tap Size** | M8x1.25 |
| **Collet** | AR16-M, ER16-M | | |
| **Compatible Machines** | - | | |

| Model | A | B | C | D | E | F | G |
|---|---|---|---|---|---|---|---|
| SR20R-31610 | 87 | 28.5 | 14 | 24 | Ø14 | Ø22 | 28 |

Unit: mm

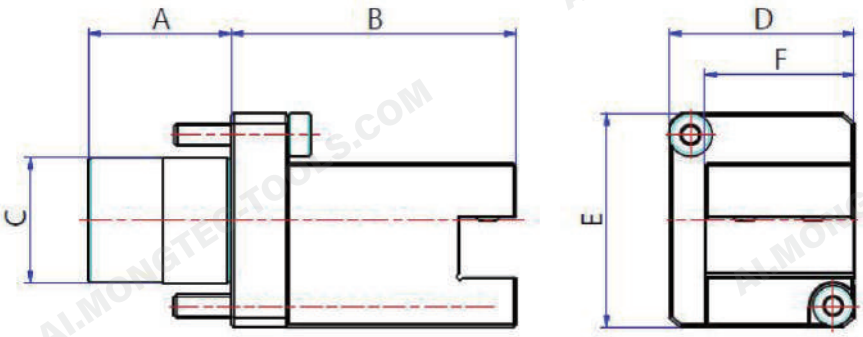


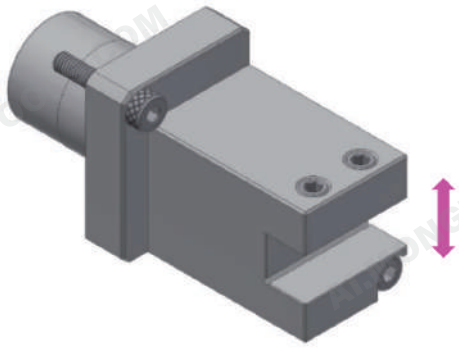

| Backworking Turning Tool Holder | | | |
|---|---|---|---|
| **Model** | SR20RIV-31510 | **STAR Part No.** | - |
| **Gear Ratio** | - | **Max. Speed** | - |
| **Vertical Adjustment** | - | **Tool Shank Size** | □10 mm |
| **Turning Insert** | - | | |
| **Compatible Machines** | SB12R/SB20R/SR20RIV/SR32JII(TYPE A/B)/ SR38(TYPE A/B)/SV20R/SW12RII/SW20 | | |

| Model | A | B | C | D | E | F |
|---|---|---|---|---|---|---|
| SR20RIV-31510 | 25 | 50 | Ø22 | 32.5 | 37.5 | 26.25 |

Unit: mm

Specifications and dimensions are for reference only and subject to change without notice. Please confirm the latest specifications before ordering.

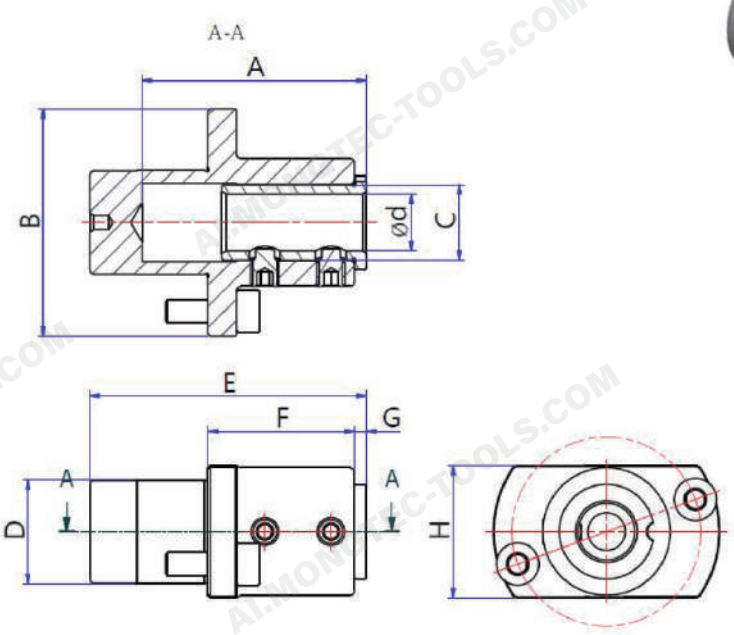


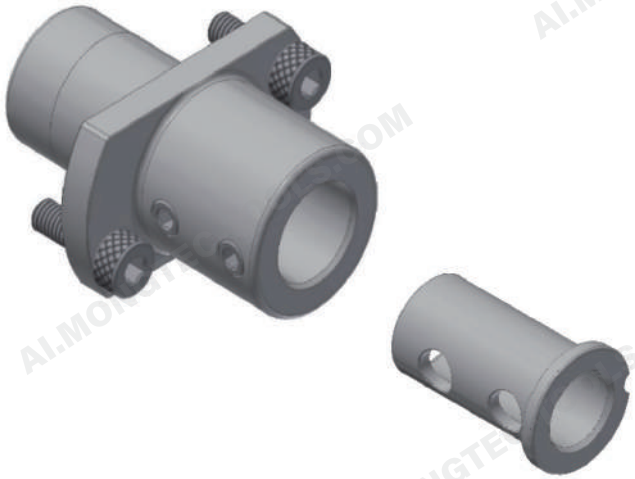

| Backworking Side-Lock Tool Holder | | | |
|---|---|---|---|
| **Model** | SR20R-51311 | **STAR Part No.** | 671-75 |
| **Gear Ratio** | - | **Max. Speed** | - |
| **Max. Tool Shank Dia.** | Ø16 | | |
| **Tool Shank Dia.** | Ø16, Ø12.7, Ø12, Ø10, Ø9.525, Ø8, Ø7.938 | | |
| **Compatible Machines** | SR32J/SR32JII(TYPE A) | | |

| Tool Shank Dia. (Ød) | Bushing | Set Screw |
|---|---|---|
| Ø16 | M6x8 | |
| Ø12.7 | BS127160305 | M6x8 |
| Ø12 | BS120160305 | M6x8 |
| Ø10 | BS100160305 | M6x10 |
| Ø9.525 | BS095160305 | M6x10 |
| Ø8 | BS080160305 | M6x10 |
| Ø7.938 | BS079160305 | M6x10 |

| Model | A | B | C | D | E | F | G | H |
|---|---|---|---|---|---|---|---|---|
| SR20R-51311 | 47.5 | 48 | Ø16 | Ø22 | 58.5 | 31 | 2.5 | 28 |

Unit: mm

Specifications and dimensions are for reference only and subject to change without notice. Please confirm the latest specifications before ordering.

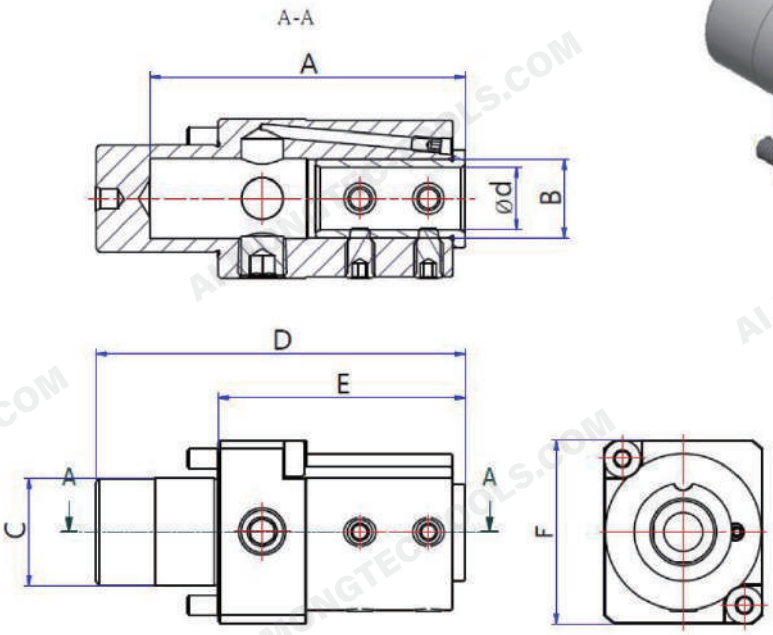


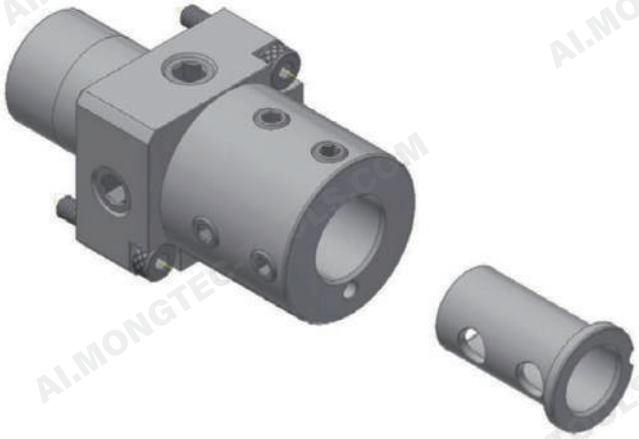

| Backworking Side-Lock Tool Holder | | | |
|---|---|---|---|
| **Model** | SR20RIV-51311 | **STAR Part No.** | 101-11 |
| **Gear Ratio** | - | **Max. Speed** | - |
| **Max. Tool Shank Dia.** | Ø16 | | |
| **Tool Shank Dia.** | Ø16, Ø12.7, Ø12, Ø10, Ø9.525, Ø8, Ø7.938 | | |
| **Compatible Machines** | SR20RIV/SR32JII(TYPE B)/SR38(TYPE A/B)/ SV20R | | |

| Tool Shank Dia. (Ød) | Bushing | Set Screw |
|---|---|---|
| Ø16 | M6x10 | |
| Ø12.7 | BS127160305 | M6x10 |
| Ø12 | BS120160305 | M6x10 |
| Ø10 | BS100160305 | M6x12 |
| Ø9.525 | BS095160305 | M6x12 |
| Ø8 | BS080160305 | M6x12 |
| Ø7.938 | BS079160305 | M6x12 |

| Model | A | B | C | D | E | F |
|---|---|---|---|---|---|---|
| SR20RIV-51311 | 64.5 | Ø16 | Ø22 | 75.5 | 50.5 | 37.5 |

Unit: mm

Specifications and dimensions are for reference only and subject to change without notice. Please confirm the latest specifications before ordering.

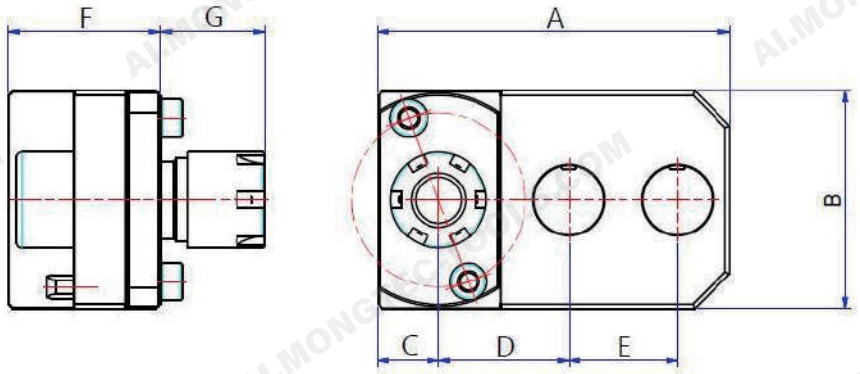


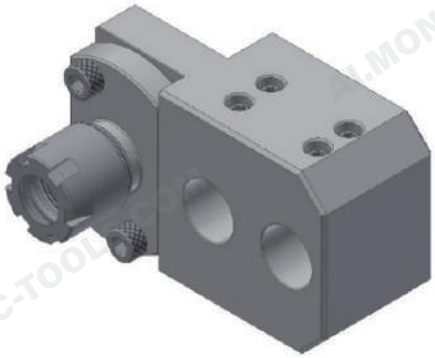

| Backworking Dual-Hole Drilling Holder | | | |
|---|---|---|---|
| **Model** | SR20J-31030 | **STAR Part No.** | - |
| **Gear Ratio** | - | **Max. Speed** | - |
| **Max. Collet Dia.** | 10 mm | **Bore Dia.** | Ø16mm |
| **Collet** | AR16-M, ER16-M | | |
| **Compatible Machines** | SR20J / JN | | |

| Model | A | B | C | D | E | F | G |
|---|---|---|---|---|---|---|---|
| SR20J-31030 | 81 | 50 | 14 | 30 | 25 | 35 | 24 |

Unit: mm

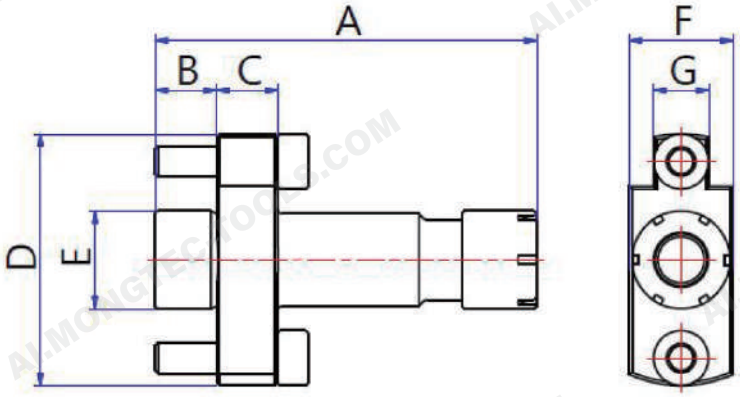


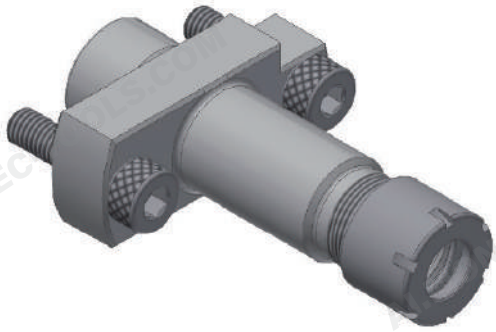

| Backworking Drilling Holder | | | |
|---|---|---|---|
| **Model** | SR10J-31010 | **STAR Part No.** | 691-25 |
| **Gear Ratio** | - | **Max. Speed** | - |
| **Max. Collet Dia.** | 7 mm | **Bore Dia.** | - |
| **Collet** | AR11-M, ER11-M | | |
| **Compatible Machines** | SR10J | | |

| Model | A | B | C | D | E | F | G |
|---|---|---|---|---|---|---|---|
| SR10J-31010 | 62 | 10 | 10 | Ø41 | Ø16 | 17 | 9 |

Unit: mm

Specifications and dimensions are for reference only and subject to change without notice. Please confirm the latest specifications before ordering.

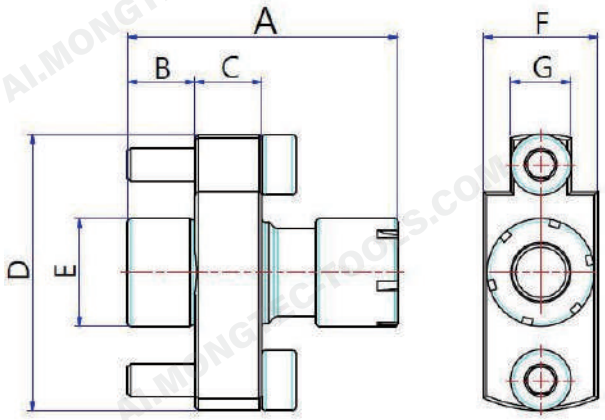


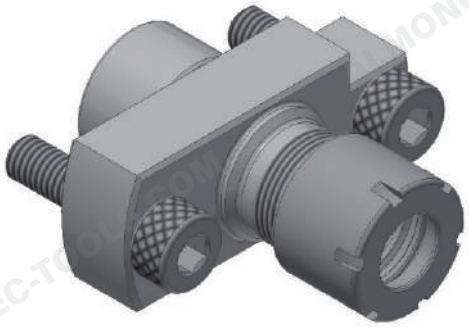

| Backworking Drilling Holder | | | |
|---|---|---|---|
| **Model** | SR10J-31010-1 | **STAR Part No.** | - |
| **Gear Ratio** | - | **Max. Speed** | - |
| **Max. Collet Dia.** | 7 mm | **Bore Dia.** | - |
| **Collet** | AR11-M, ER11-M | | |
| **Compatible Machines** | SR10J | | |

| Model | A | B | C | D | E | F | G |
|---|---|---|---|---|---|---|---|
| SR10J-31010-1 | 40 | 10 | 10 | Ø41 | Ø16 | 17 | 9 |

Unit: mm

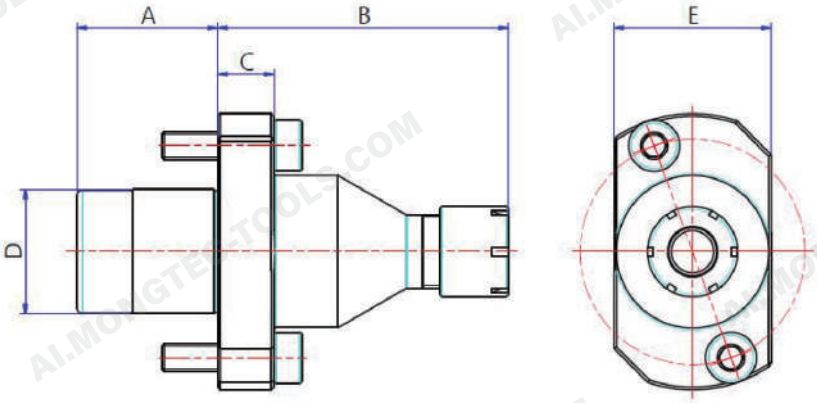


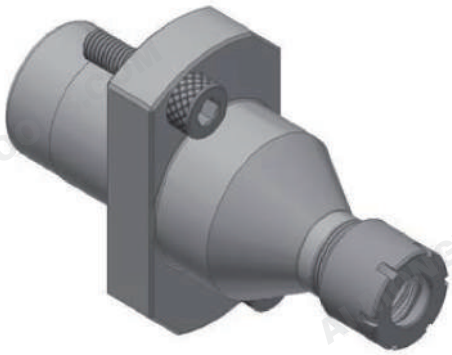

| Backworking Drilling Holder | | | |
|---|---|---|---|
| **Model** | SR20R-31010 | **STAR Part No.** | 691-24 |
| **Gear Ratio** | - | **Max. Speed** | - |
| **Max. Collet Dia.** | 7 mm | | |
| **Collet** | AR11-M, ER11-M | | |
| **Compatible Machines** | ECAS12 / 20, SR-20RII, SR-20RIII, SR20J / JN, SR20RIV, SR32J / JN, SR10J, SB12R / 20R TYPE E / N, SW12RII | | |

| Model | A | B | C | D | E |
|---|---|---|---|---|---|
| SR20R-31010 | 25 | 51.7 | 10 | Ø22 | 28 |

Unit: mm

Specifications and dimensions are for reference only and subject to change without notice. Please confirm the latest specifications before ordering.

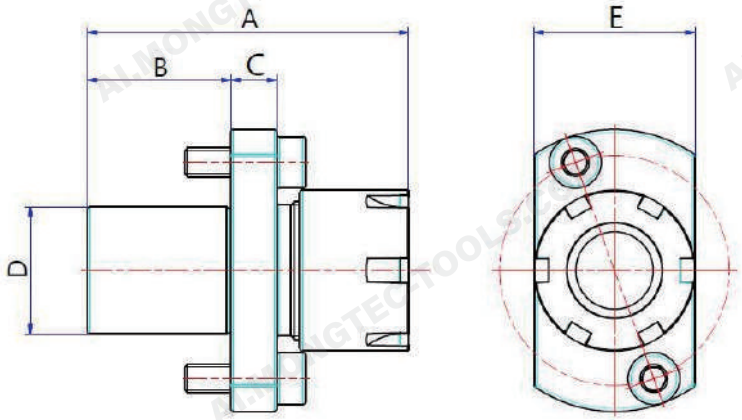

| Backworking Drilling Holder | | | |
|---|---|---|---|
| **Model** | SR20R-31010-2 | **STAR Part No.** | - |
| **Gear Ratio** | - | **Max. Speed** | - |
| **Max. Collet Dia.** | 13 mm | | |
| **Collet** | AR20-M, ER20-M<br>Compatible Machines | | |

| Model | A | B | C | D | E |
|---|---|---|---|---|---|
| SR20R-31010-2 | 56 | 25 | 8 | Ø22 | 28 |

Unit: mm

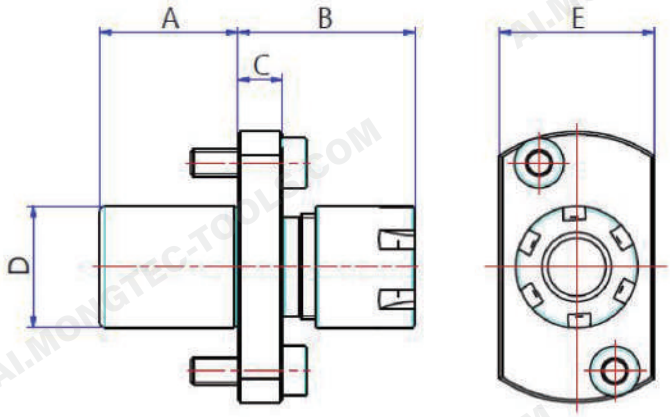


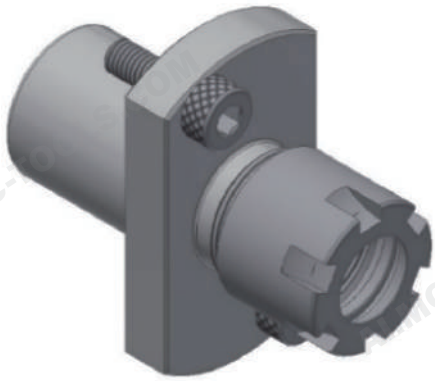

| Backworking Drilling Holder | | | |
|---|---|---|---|
| **Model** | SR20R-51410 | **STAR Part No.** | 541-21 |
| **Gear Ratio** | - | **Max. Speed** | - |
| **Max. Collet Dia.** | 10 mm | | |
| **Collet** | AR16-M, ER16-M | | |
| **Compatible Machines** | ECAS12 / 20, SR-20RII, SR-20RIII, SR20J / JN, SR20RIV, SR32J / JN, SR10J, SR16R / 20R TYPE C,<br>SB12R / 20R TYPE E / N, SB12II / 16II, SB20 TYPE E, SW12RII, SV20R | | |

| Model | A | B | C | D | E |
|---|---|---|---|---|---|
| SR20R-51410 | 25 | 32 | 8 | Ø22 | 28 |

Unit: mm

Specifications and dimensions are for reference only and subject to change without notice. Please confirm the latest specifications before ordering.

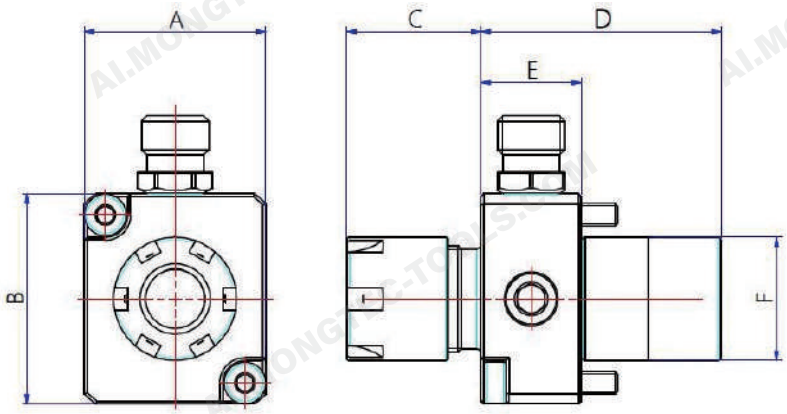


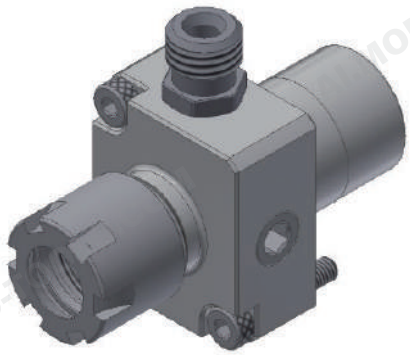

| Backworking Drilling Holder | | | |
|---|---|---|---|
| **Model** | SR20RIV-31011 | **STAR Part No.** | 0R1-23 |
| **Gear Ratio** | - | **Max. Speed** | - |
| **Max. Collet Dia.** | 10 mm | | |
| **Collet** | AR16-M, ER16-M | | |
| **Compatible Machines** | SB12R/SB20R/SR20RIV/SV20R/SW12RII | | |

| Model | A | B | C | D | E | F |
|---|---|---|---|---|---|---|
| SR20RIV-31011 | 32.5 | 37.5 | 24 | 43 | 18 | Ø22 |

Unit: mm

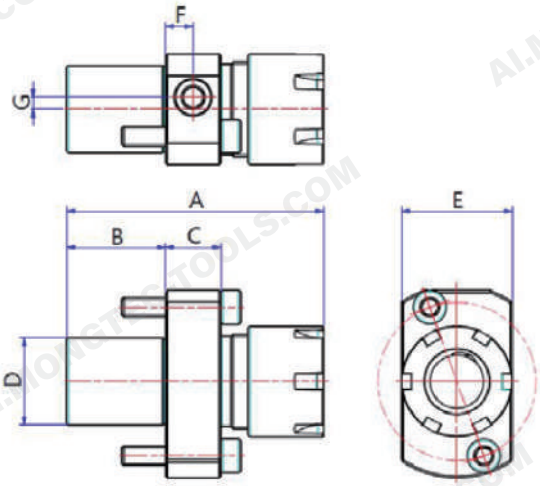

| Backworking Drilling Holder | | | |
|---|---|---|---|
| **Model** | SR32J-31011 | **STAR Part No.** | - |
| **Gear Ratio** | - | **Max. Speed** | - |
| **Max. Collet Dia.** | 13 mm | | |
| **Collet** | AR20-M, ER20-M | | |
| **Compatible Machines** | SR20RIV, SR32JII, SR38, SB12R / 20R TYPE E / N, SW12RII, SW20, SV20R | | |

| Model | A | B | C | D | E | F | G |
|---|---|---|---|---|---|---|---|
| SR32J-31011 | 65 | 25 | 14 | Ø22 | 28 | 7 | 3 |

Unit: mm

Specifications and dimensions are for reference only and subject to change without notice. Please confirm the latest specifications before ordering.

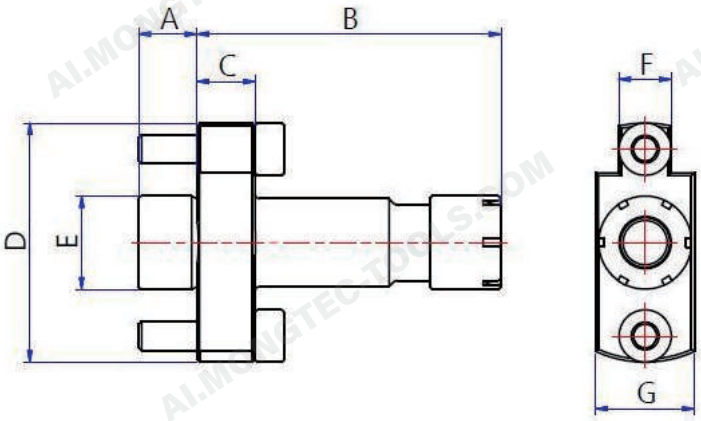


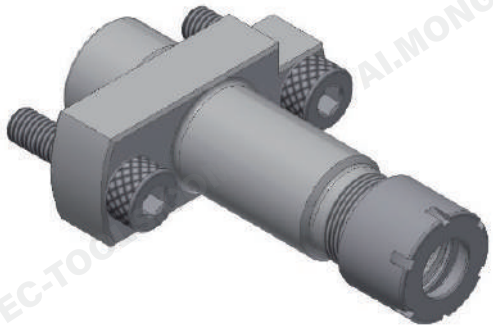

| Backworking Drilling Holder | | | |
|---|---|---|---|
| **Model** | SR10J-31010 | **STAR Part No.** | 691-25 |
| **Gear Ratio** | - | **Max. Speed** | - |
| **Max. Collet Dia.** | 7 mm | | |
| **Collet** | AR11-M, ER11-M | | |
| **Compatible Machines** | SR10J | | |

| Model | A | B | C | D | E | F | G |
|---|---|---|---|---|---|---|---|
| SR10J-31010 | 10 | 52 | 10 | Ø41 | Ø16 | 9 | 17 |

Unit: mm

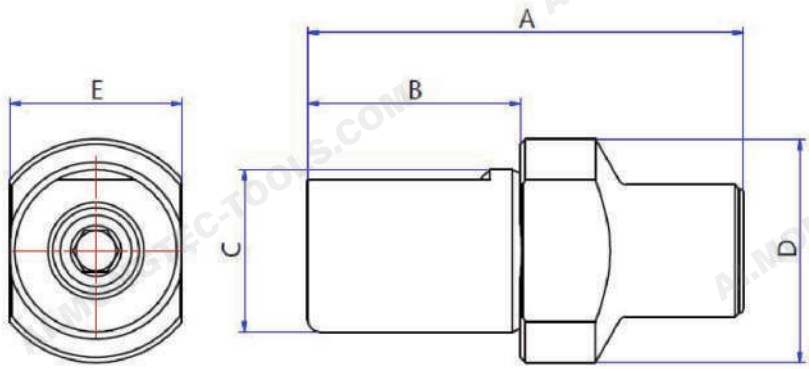

| Drilling Spindle | | | |
|---|---|---|---|
| **Model** | RB16-31010 | **STAR Part No.** | - |
| **Gear Ratio** | - | **Max. Speed** | - |
| **Max. Collet Dia.** | 7 mm | | |
| **Collet** | AR11-M, ER11-M | | |
| **Compatible Machines** | RNB16 | | |

| Model | A | B | C | D | E |
|---|---|---|---|---|---|
| RB16-31010 | 43 | 21 | Ø16 | Ø22 | 17 |

Unit: mm

Specifications and dimensions are for reference only and subject to change without notice. Please confirm the latest specifications before ordering.

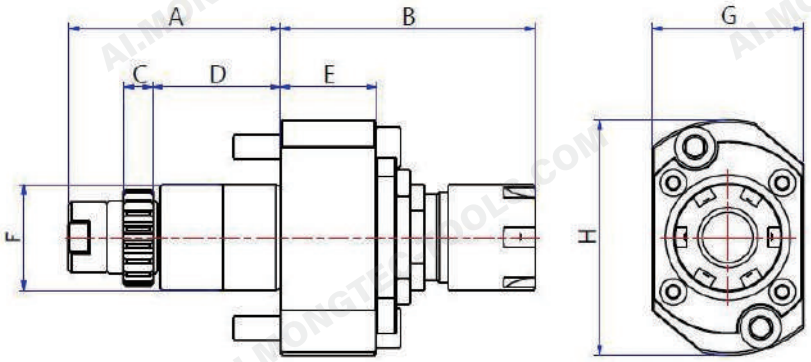


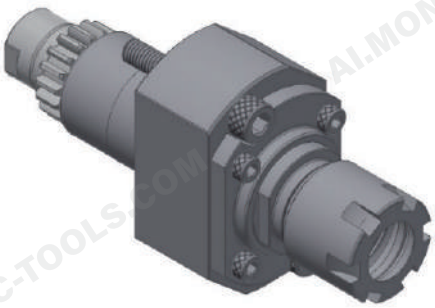

| Straight-Shank Live Tool Holder | | | |
|---|---|---|---|
| **Model** | SR20R-30310 | **STAR Part No.** | 571-61 |
| **Gear Ratio** | 1 / 1 | **Max. Speed** | 8000 rpm |
| **Max. Collet Dia.** | 10 mm | | |
| **Collet** | AR16-M, ER16-M | | |
| **Compatible Machines** | ECAS12/ECAS20/SB12R/SB20R/ SR20J/SR20RIII/SR20RIV/SR32J/SR32JII(TYPE A)/ SW12RII | | |

| Model | A | B | C | D | E | F | G | H |
|---|---|---|---|---|---|---|---|---|
| SR20R-30310 | 44 | 53 | 6 | 26.5 | 20 | Ø22 | 31.5 | Ø49 |

Unit: mm

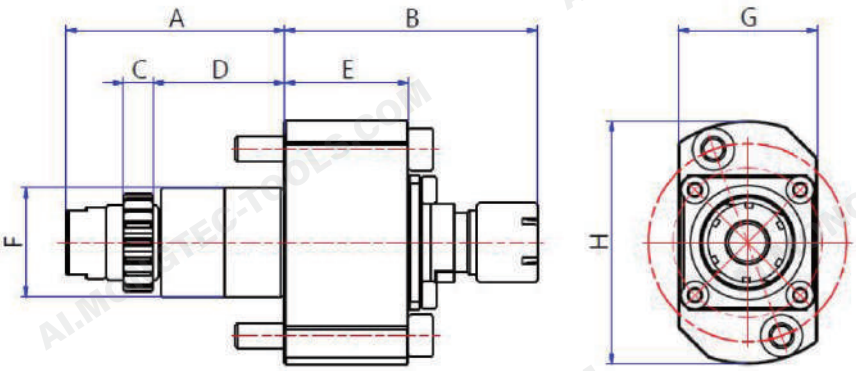


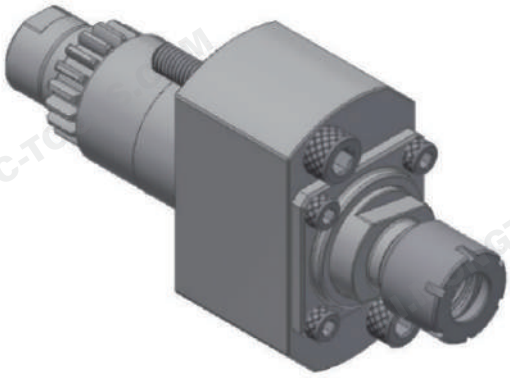

| Backworking Live Tool Holder | | | |
|---|---|---|---|
| **Model** | SR20R-30310-1 | **STAR Part No.** | 541-61 |
| **Gear Ratio** | 1 / 1 | **Max. Speed** | 6000 rpm |
| **Max. Collet Dia.** | 7 mm | | |
| **Collet** | AR11-M, ER11-M | | |
| **Compatible Machines** | ECAS12/ECAS20/SB12R/SB20R/SR10J/ SR20J/SR20RIII/SR20RIV/SR32J/SR32JII(TYPE A)/SW12RII | | |

| Model | A | B | C | D | E | F | G | H |
|---|---|---|---|---|---|---|---|---|
| SR20R-30310-1 | 44 | 51 | 6 | 26.5 | 25 | Ø22 | 28 | Ø49 |

Unit: mm

Specifications and dimensions are for reference only and subject to change without notice. Please confirm the latest specifications before ordering.

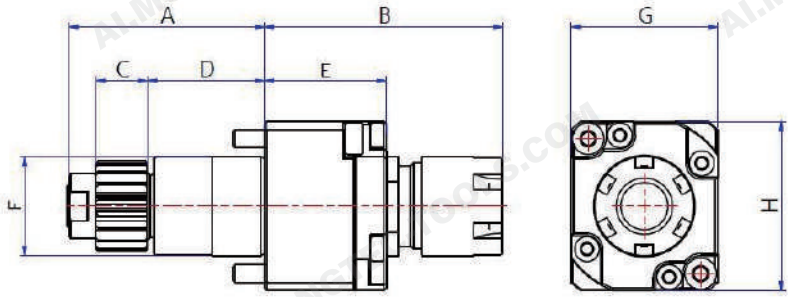


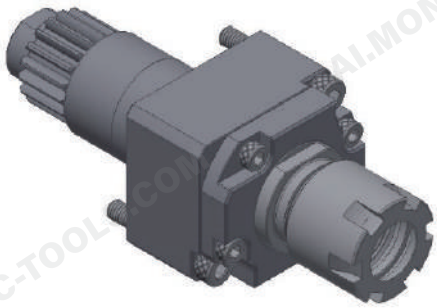

| Straight-Shank Live Tool Holder | | | |
|---|---|---|---|
| **Model** | SR20RIV-30310 | **STAR Part No.** | 0R1-61 |
| **Gear Ratio** | 1 / 1 | **Max. Speed** | 8000 rpm |
| **Max. Collet Dia.** | 10 mm | | |
| **Collet** | AR16-M, ER16-M | | |
| **Compatible Machines** | SB12R/SB20R/SR20RIV/SR32JII(TYPE A/B)/ SR38(TYPE A/B)/SV20R/SW12RII/SW20 | | |

| Model | A | B | C | D | E | F | G | H |
|---|---|---|---|---|---|---|---|---|
| SR20RIV-30310 | 43.5 | 53 | 11.5 | 26 | 27.1 | Ø22 | 32.5 | 37.5 |

Unit: mm

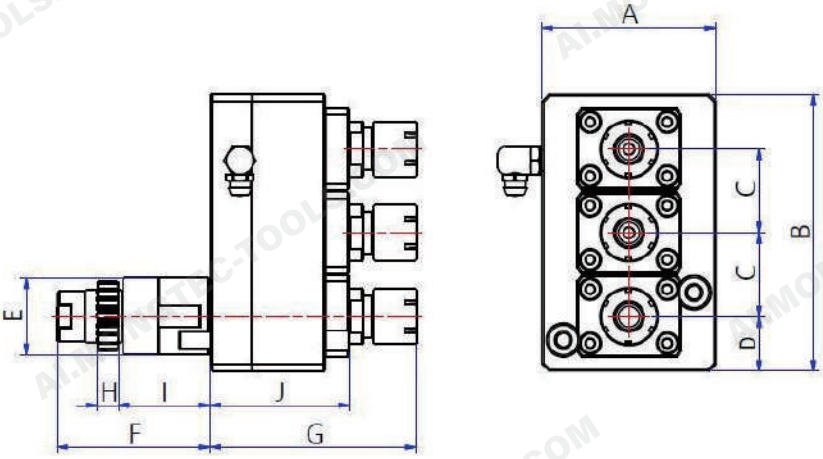


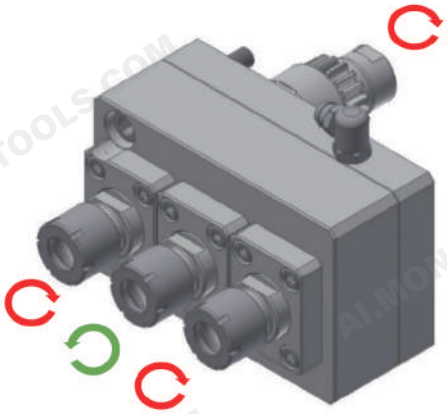

| Backworking Triple-Spindle Live Tool Holder | | | |
|---|---|---|---|
| **Model** | SR20JC-30330 | **STAR Part No.** | 0E1-51 |
| **Gear Ratio** | 1 / 1 | **Max. Speed** | 8000 rpm |
| **Max. Collet Dia.** | 7 mm | **Angle Range** | - |
| **Collet** | AR11-M, ER11-M | | |
| **Compatible Machines** | SB16R/SB20R/SR20J | | |

| Model | A | B | C | D | E | F | G | H | I | J |
|---|---|---|---|---|---|---|---|---|---|---|
| SR20JC-30330 | 50 | 79.5 | 24 | 15.75 | Ø22 | 44 | 59.2 | 6 | 26.5 | 40 |

Unit: mm

Specifications and dimensions are for reference only and subject to change without notice. Please confirm the latest specifications before ordering.

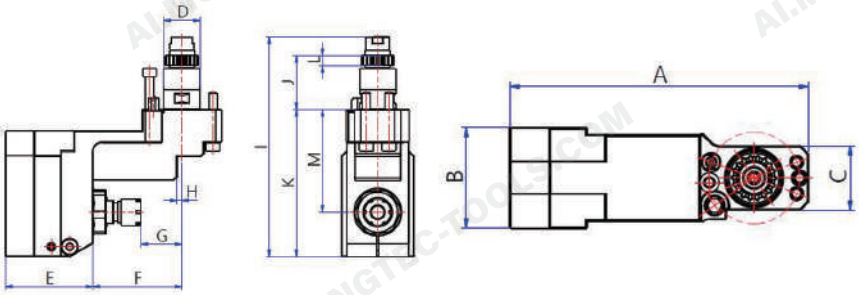


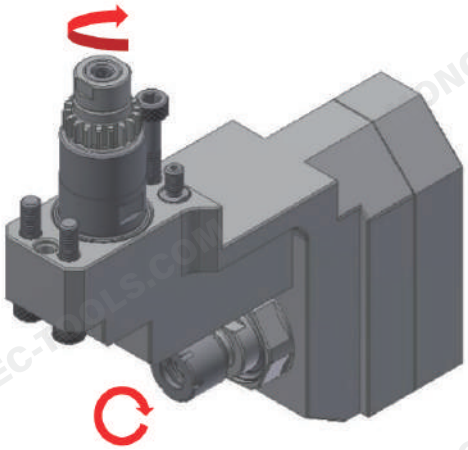

| Backworking Radial Milling Holder | | | |
|---|---|---|---|
| **Model** | SR10J-30210 | **STAR Part No.** | - |
| **Gear Ratio** | 1 / 0.55 | **Max. Speed** | 6000 rpm |
| **Spindle Adjustment** | ±1mm | **Angle Range** | - |
| **Max. Collet Dia.** | 7 mm | | |
| **Collet** | Main Spindle: AR11-M, ER11-M | | |
| **Compatible Machines** | ECAS-12 / 20, SR-20RII, SR-20III, SR-20J / JN, SR-32J / JN, SR-10J, SB12R / 20R TYPE E / N,<br>SW-12RII, SV-20R | | |

| Model | A | B | C | D | E | F | G | H | I | J | K | L | M |
|---|---|---|---|---|---|---|---|---|---|---|---|---|---|
| SR10J-30210 | 131 | 44 | 28 | Ø22 | 53 | 54 | 24.8 | 3 | 133 | 32.5 | 89 | 6 | 62 |

Unit: mm

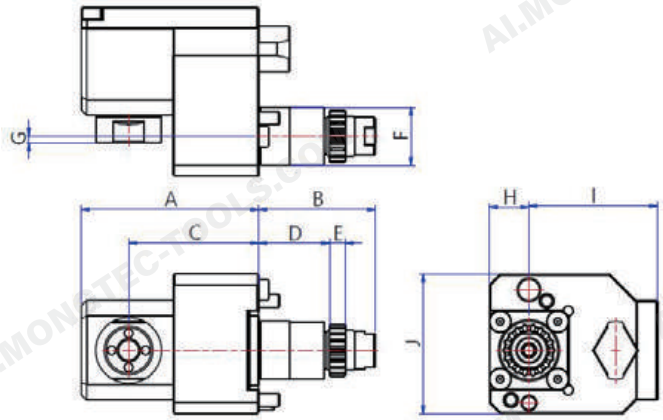


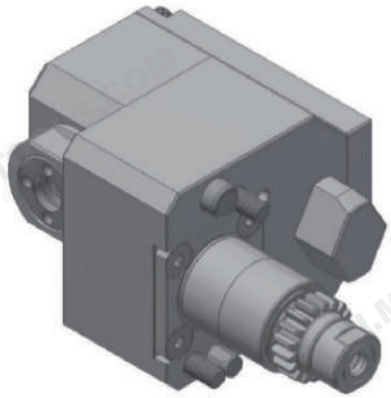

| Backworking Radial Milling Holder | | | |
|---|---|---|---|
| **Model** | SR20R-30210 | **STAR Part No.** | - |
| **Gear Ratio** | 1 / 1 | **Max. Speed** | 6000 rpm |
| **Max. Collet Dia.** | - | | |
| **Collet** | ERA11 (Internal Nut) | | |
| **Compatible Machines** | SR-20R, SR-20J, SR-32J | | |

| Model | A | B | C | D | E | F | G | H | I | J |
|---|---|---|---|---|---|---|---|---|---|---|
| SR20R-30210 | 67.5 | 44.5 | 49.5 | 27 | 6 | Ø22 | 2.5 | 15 | 49 | 53 |

Unit: mm

Specifications and dimensions are for reference only and subject to change without notice. Please confirm the latest specifications before ordering.

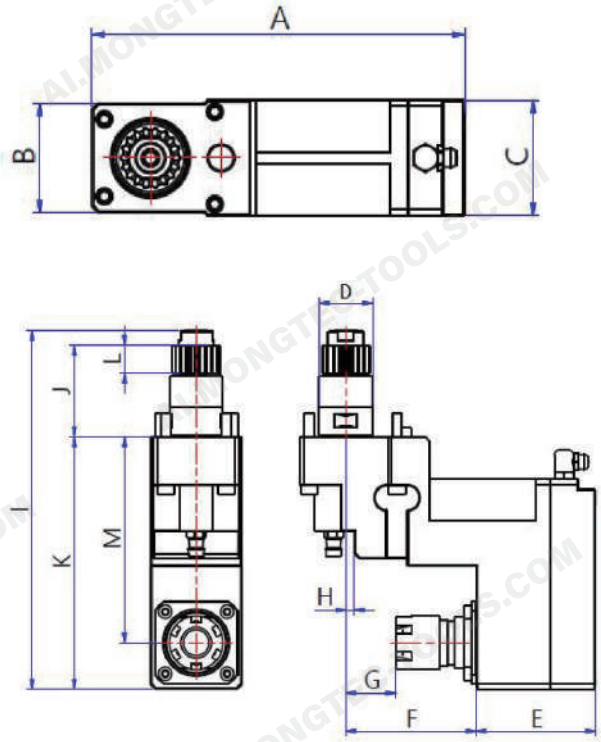


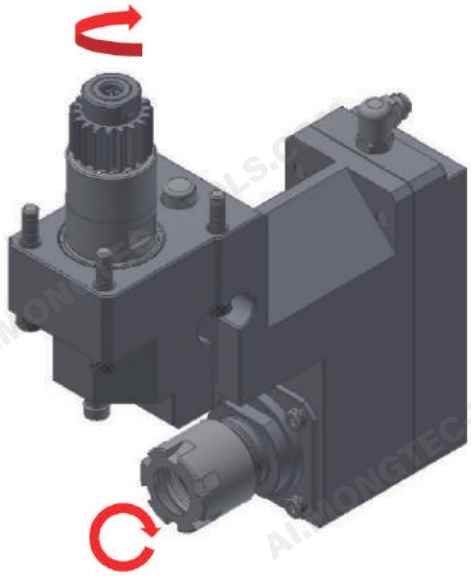

| Backworking Radial Milling Holder | | | |
|---|---|---|---|
| **Model** | SR20RIV-30210 | **STAR Part No.** | 0R1-51 |
| **Gear Ratio** | 1 / 1 | **Max. Speed** | 6000 rpm |
| **Max. Collet Dia.** | 10 mm | **Angle Range** | - |
| **Collet** | Main Spindle: AR16-M, ER16-M | | |
| **Compatible Machines** | SR-20RIV, SR32JII, SR-38(Type A / B), SB12R / 20R TYPE E / N, SW-12RII, SW-20, SV20R | | |

| Model | A | B | C | D | E | F | G | H | I | J | K | L | M |
|---|---|---|---|---|---|---|---|---|---|---|---|---|---|
| SR20RIV-30210 | 121.5 | 35.5 | 37.5 | Ø22 | 49 | 53.5 | 20.5 | 3.5 | 147 | 37.5 | 103.5 | 11.5 | 84.5 |

Unit: mm

Specifications and dimensions are for reference only and subject to change without notice. Please confirm the latest specifications before ordering.

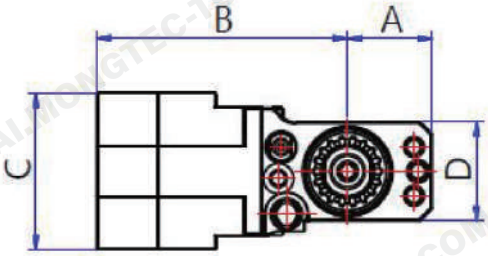


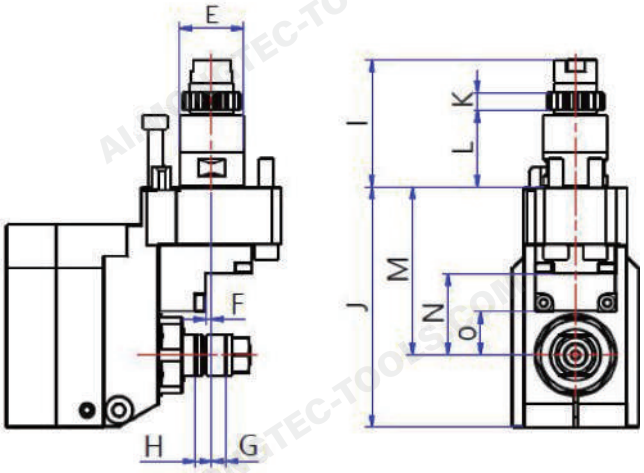


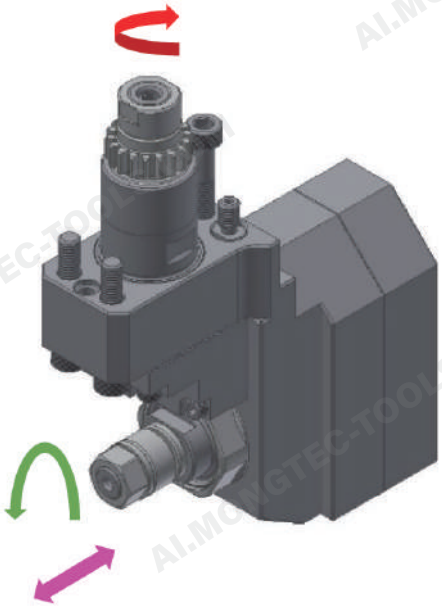

| Backworking Slitting Saw Holder | | | |
|---|---|---|---|
| **Model** | SR10J-30410 | **STAR Part No.** | 691-65/691-66 |
| **Gear Ratio** | 1 / 0.55 | **Max. Speed** | 4000 rpm |
| **Spindle Adjustment** | ±1 mm | **Angle Range** | - |
| **Shank Dia.** | Ø5, Ø6, Ø8, Ø10, Ø12, Ø12.7, Ø13 | | |
| **Compatible Machines** | ECAS12/ECAS20/SB12R/SB20R/SR10J/ SR20J/SR20RIII/SR32J/SR32JII(TYPE A)/ SV20R/SW12RII | | |

| Shank Dia. | Spacer | Clamping Nut | Laser Mark No. |
|---|---|---|---|
| Ø5 | GK050110250/GK050110700 | CNM05080080 | 69166-5 |
| Ø6 | GK060120250/GK060120700 | CNM06100080 | 69166-6 |
| Ø8 | GK080140250/GK080140700 | CNM08100080 | 69166-8 |
| Ø10 | GK100170250/GK100170700 | CNM10100080 | 69166-10 |
| Ø12 | GK120190250/GK120190700 | CNM12125080 | 69166-12 |
| Ø12.7 | GK127190250/GK127190700 | CNM12125080 | 69165-12.7 |
| Ø13 | GK130190250/GK130190700 | CNM12125080 | 69165-13 |

| Model | A | B | C | D | E | F | G | H | I | J | K | L | M | N | O |
|---|---|---|---|---|---|---|---|---|---|---|---|---|---|---|---|
| SR10J-30410 | 24 | 71 | 44 | 28 | Ø 2 2 | 2 | 5 | 6 ( M A X ) | 4 4 | 83 | 6 | 26.5 | 58 | 28 | 15 |

Unit: mm

Specifications and dimensions are for reference only and subject to change without notice. Please confirm the latest specifications before ordering.

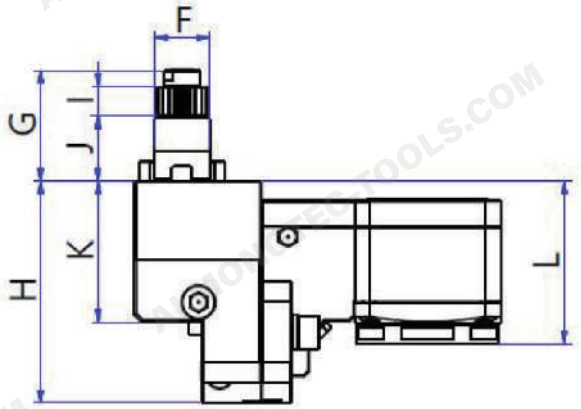


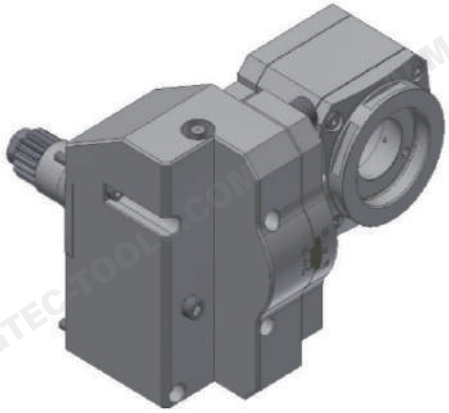

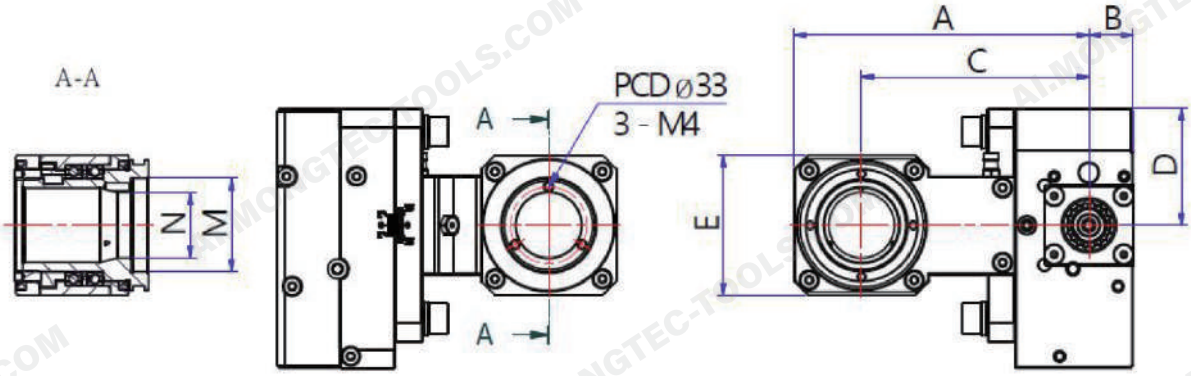


| Whirling Tool Holder | | | |
|---|---|---|---|
| **Model** | SR20RIV-30510 | **STAR Part No.** | - |
| **Gear Ratio** | 1 / 1 | **Max. Speed** | 4000 rpm |
| **Spindle Adjustment** | - | **Angle Range** | ±15° |
| **Tool Holder** | SRW4020, SP-9908 | | |
| **Compatible Machines** | SR-20RIV | | |

| Model | A | B | C | D | E | F | G | H | I | J | K | L | M | N |
|---|---|---|---|---|---|---|---|---|---|---|---|---|---|---|
| SR20RIV-30510 | 126.5 | 19 | 97.5 | 50 | 60 | Ø22 | 44 | 88 | 11.5 | 26 | 56 | 64.6 | Ø40 | Ø28 |

Unit: mm

Specifications and dimensions are for reference only and subject to change without notice. Please confirm the latest specifications before ordering.

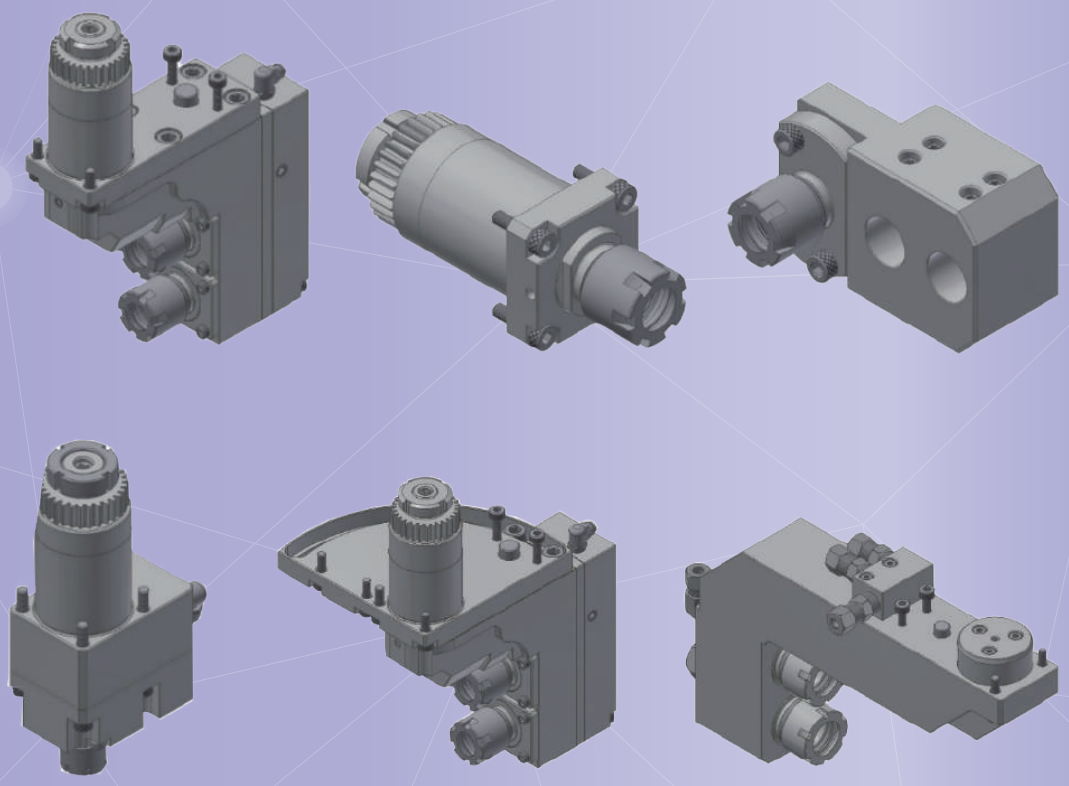

Facebook WeChat YouTube Mongtec Web LINE WhatsApp

Mongtec Precision Inc.

TEL : +886-4-22653360

FAX : +886-4-22653386

E-mail : info@mongtec.com

No. 87, Sec. 1, Daqing St., South Dist., Taichung City 402024, Taiwan (R.O.C.)