MONGTEC®
CNC職人のこだわり
MONGTEC-TOOLS.COM

Mongtec STATIC TURRET TOOLHOLERS

mongtec | mongtec-tools.com | ai.mongtec-tools.com | info@mongtec.com

OD static toolholders

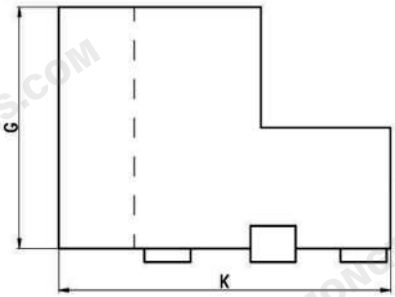

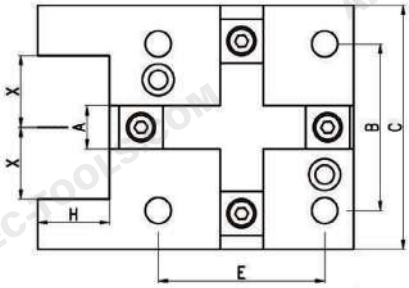

Model	C	K	G	H	X	A	B	E	K	Compatible Brands
BMT40 C5520	75	97	55	25	25	12	50	60	2.20	DOOSAN、Hardinge
BMT45 C6020	75	110	60	20	20	15	58	58	2.49	DOOSAN、Hardinge Spinner、Victor、Jyoti Samsung(SMEC)
BMT45 C7020	85	110	70	20	20	15	58	58	3.43	
BMT45 C8025	85	110	80	25	25	15	58	58	3.92	
BMT55 C6020	90	115	60	20	20	15	64	64	3.29	DOOSAN、Hardinge HyundaiWIA、Jyoti Goodway、Hwacheon Samsung(SMEC)、Victor
BMT55 C8020	86	120	80	20	20	15	64	64	4.34	
BMT55 C8025	95	120	80	25	25	15	64	64	4.30	
BMT55 C8032	86	120	80	32	32	15	64	64	4.34	
BMT65 C7520	96	131	75	20	20	18	73	70	4.97	DOOSAN、Hardinge Victor、Goodway、Haas HyundaiWIA、Hwacheon Samsung(SMEC)
BMT65 C7525	95	131	75	25	25	18	73	70	4.97	
BMT65 C8025	95	131	80	25	25	18	73	70	5.25	
BMT75 C8525	112	140	85	25	25	25	90	90	7.00	DOOSAN、Hwacheon HyundaiWIA、Victor Samsung(SMEC)
BMT75 C8032	112	152.5	80	30	32	25	90	90	7.14	

Double OD static toolholders

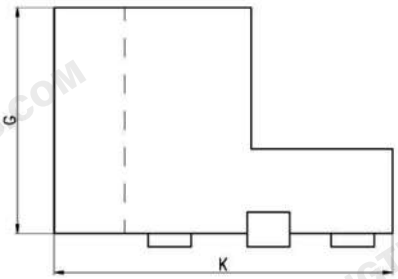

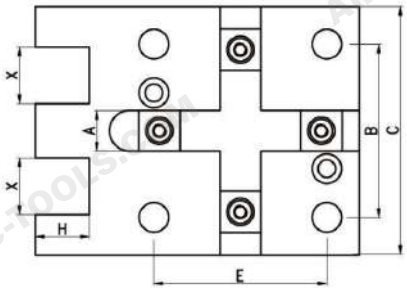

Model	C	K	G	H	X	A	B	E	K	Compatible Brands
BMT55 C8020	92	120	80	20	21	15	64	64	5.60	DOOSAN、Hardinge
BMT65 C7520	97	131	75	20	21	18	73	70	6.10	

ID static toolholders

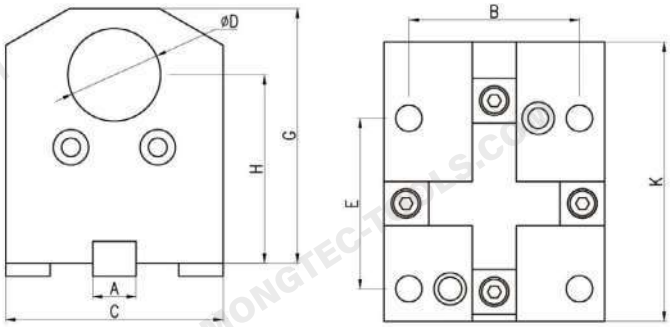

Model	C	K	G	H	D	A	B	E	K	Compatible Brands
BMT40 B6025	63	94	82	60	25	12	50	60	3.20	DOOSAN、Hardinge
BMT45 B6040	75	95	88	60	40	15	58	58	3.50	DOOSAN、Hardinge Spinner、Victor Samsung(SMEC)
BMT45 B6532	75	95	88	65	32	15	58	58	3.35	
BMT45 B8032	75	95	110	80	32	15	58	58	4.43	
BMT55 B6032	86	105	90	60	32	15	64	64	5.10	DOOSAN、Hardinge HyundaiWIA、Jyoti Goodway、Hwacheon Samsung(SMEC)
BMT55 B6040	86	105	90	60	40	15	64	64	5.10	
BMT55 B7032	86	105	100	70	32	15	64	64	5.96	
BMT55 B7040	86	105	100	70	40	15	64	64	4.90	
BMT55 B8032	86	105	109	80	32	15	64	64	5.80	
BMT55 B8540	86	105	115	85	40	15	64	64	5.80	
BMT65 B6032	86	105	90	60	32	15	64	64	5.10	DOOSAN、Hardinge HyundaiWIA、Jyoti Goodway、Hwacheon Samsung(SMEC)
BMT65 B6040	86	105	90	60	40	15	64	64	5.10	
BMT65 B7032	86	105	100	70	32	15	64	64	5.96	
BMT65 B7040	86	105	100	70	40	15	64	64	4.90	
BMT65 B8032	86	105	109	80	32	15	64	64	5.80	
BMT65 B8540	86	105	115	85	40	15	64	64	5.80	
BMT75 B9050	112	120	130	90	50	25	90	90	9.80	DOOSAN、Hardinge HyundaiWIA、Victor Samsung(SMEC)
BMT75 B11050	112	115	150	110	50	25	90	90	9.80	
BMT75 B11060	112	135	1156	110	60	25	90	90	12.30	

Face static toolholders

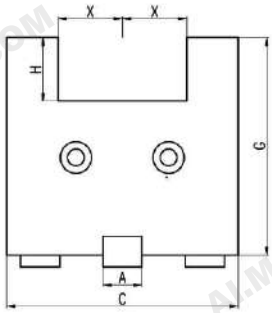

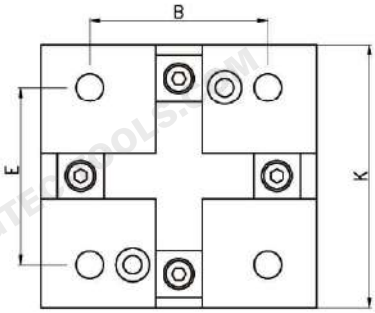

Model	C	K	G	H	X	A	B	E	K	Compatible Brands
BMT45 F6020	75	85	60	20	20	15	58	58	2.26	DOOSAN、Hardinge Spinner、Victor、Jyoti Samsung(SMEC)
BMT45 F7032	90	86	70	32	32	15	58	58	3.20	
BMT45 F8020	75	85	80	20	20	15	58	58	3.04	
BMT45 F8525	90	86	85	25	25	15	58	58	3.82	
BMT55 F7020	90	95	70	20	20	15	64	64	3.51	DOOSAN、Hardinge HyundaiWIA、Jyoti、Victor、Hwacheon、Samsung(SMEC)
BMT55 F7025	86	95	70	25	25	15	64	64	3.35	
BMT55 F8032	86	95	80	32	32	15	64	64	3.82	
BMT55 F8520	92	95	85	20	20	15	64	64	4.06	
BMT55 F8525	92	95	85	25	25	15	64	64	4.45	
BMT65 F7025	95	106	70	25	25	18	93	70	4.13	DOOSAN、Goodway、Hwacheon、Hardinge、Samsung(SMEC)、Victor、HyundaiWIA、Haas
BMT65 F9525	96	105	95	25	25	18	73	70	5.62	
BMT75 F7025	112	135	70	25	25	25	90	90	6.20	DOOSAN、Victor、Hwacheon、HyundaiWIA、Samsung(SMEC)
BMT75 F7032	112	120	70	32	32	25	90	90	5.46	
BMT75 F12225	112	135	122	25	25	25	90	90	10.76	
BMT75 F13532	112	120	135	32	32	25	90	90	10.61	

Applicable to Lathes

MAZAK

QUICK TURN PRIMOS 15 OL
QUICK TURN 150L、200L、250L、300L、350L

Round Tool Block with Middle Coolant

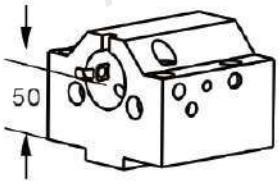

Bore Dia Φ 40/32

D40/32
Inner Bore Dia
Φ6
Φ8
Φ10
Φ12
Φ20

Overall Dimension
114*100*88

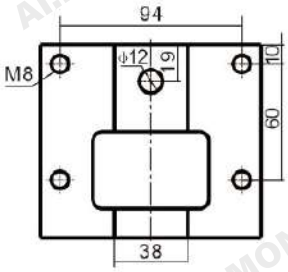

Round Tool Block with Back Coolant

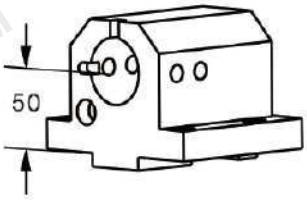

Bore Dia Φ 40/32

D40/32
Inner Bore Taper
2#
3#
4#

Rectangle Tool Block

Overall Dimension
114*100*51

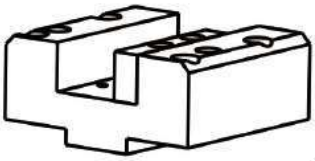

Slot 25X25

Lathe Tool
25*25

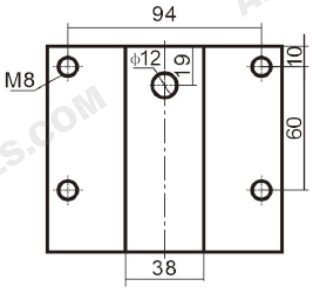

Applicable to Lathes

MAZAK

QSM 200L

Round Tool Block

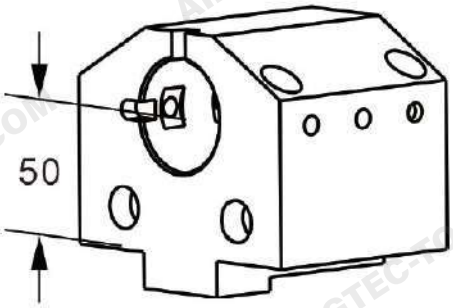

Bore Dia Φ 40/32

Overall Dimension
104*80*93

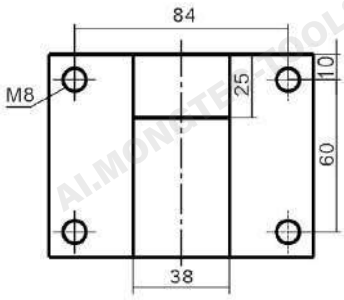

QUICK TURN PRIMOS 50L、100L

Round Tool Block with Middle Coolant

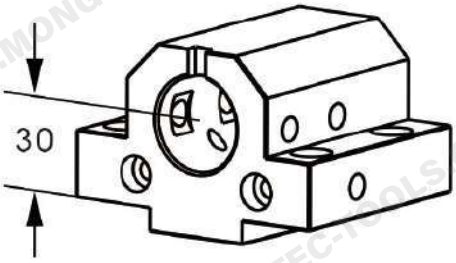

Bore Dia Φ32

Overall Dimension
95*80*63

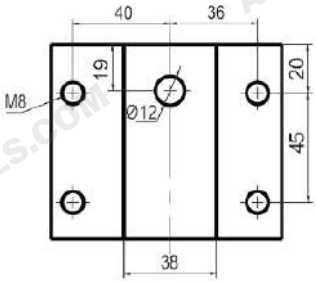

Applicable to Lathes

TAKISAWA

TCN-2100L3

Round Tool Block

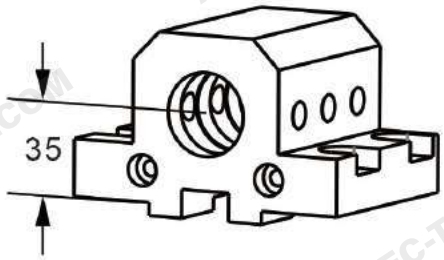

Bore Dia Φ32

Overall Dimension
112*80*70

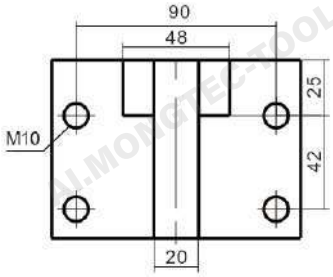

Rectangle Tool Block

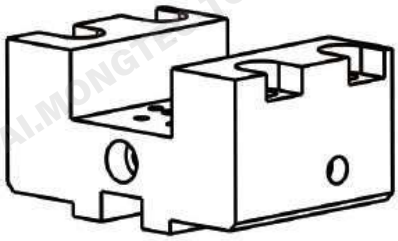

Slot 25X25

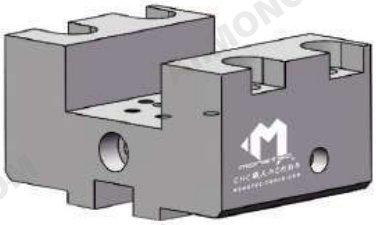

Overall Dimension
113*60*80

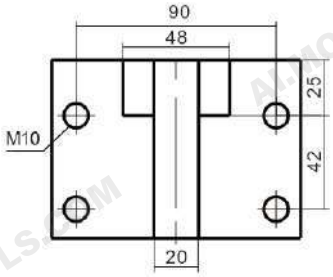

Applicable to Lathes

TAKISAWA

NEX106

Round Tool Block

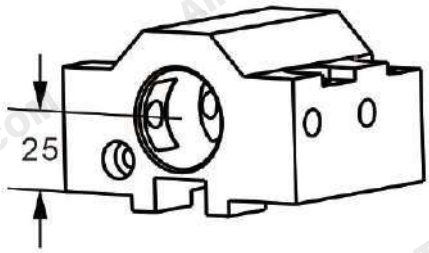

Bore Dia Φ32

Overall Dimension
90*70*58

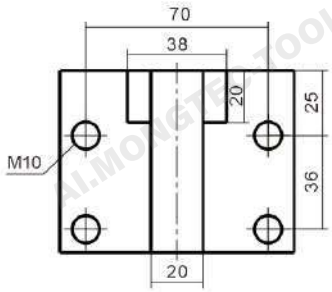

Rectangle Tool Block

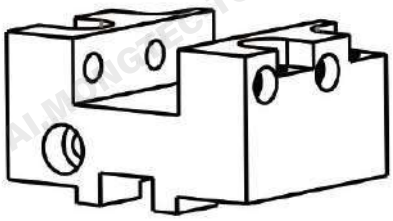

Slot 20X20

Overall Dimension
90*70*50

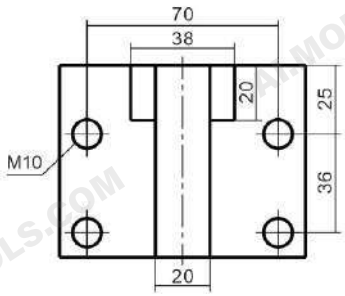

Applicable to Lathes

TAKISAWA

NEX-108、TCN-2100C

Round Tool Block

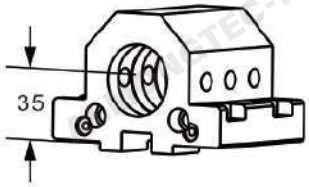

Bore Dia Φ40/32

Overall Dimension
113*80*77

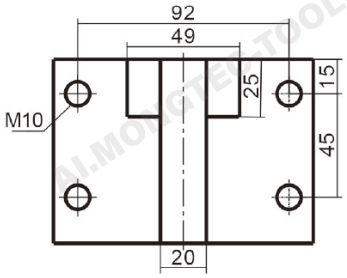

Round Tool Block with Back Coolant

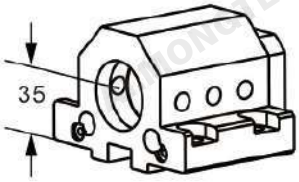

Rectangle Tool Block

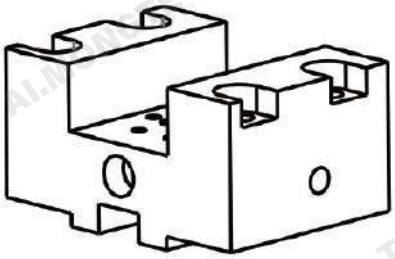

Slot 25X25

Overall Dimension
113*80*60

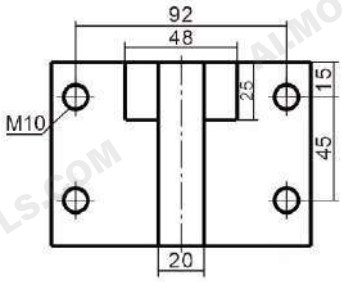

Applicable to Lathes

TAKISAWA

LA200

Round Tool Block with Middle Coolant

Overall Dimension
92*85*71

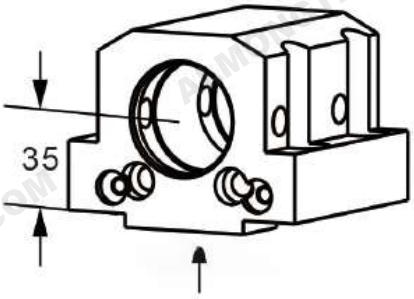

Bore Dia Φ40

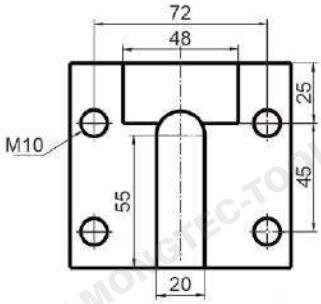

Round Tool Block with Back Coolant

Overall Dimension
92*85*71

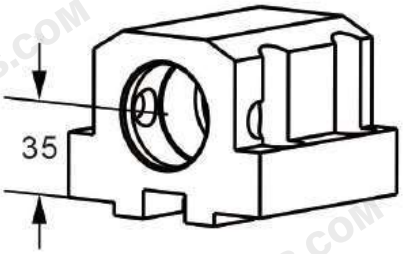

Bore Dia Φ40

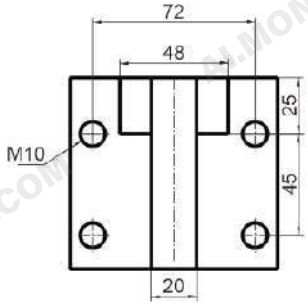

Rectangle Tool Block

Overall Dimension
92*80*60

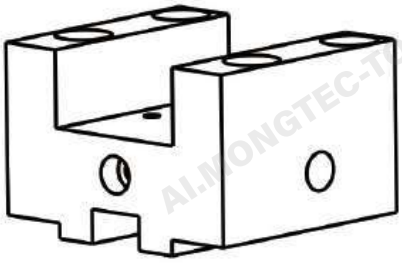

Slot 22X25

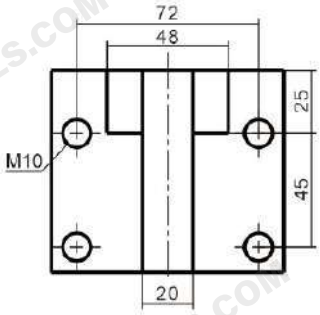

Applicable to Lathes

TAKISAWA

LA250、NEX110

Round Tool Block with Back Coolant

Overall Dimension
140*100*95

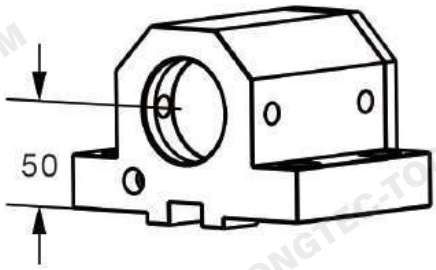

Bore Dia Φ50

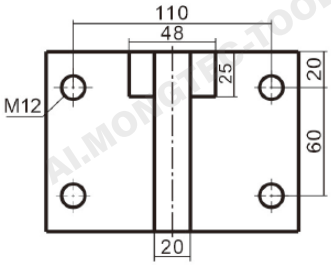

Rectangle Tool Block

Overall Dimension
140*100*70

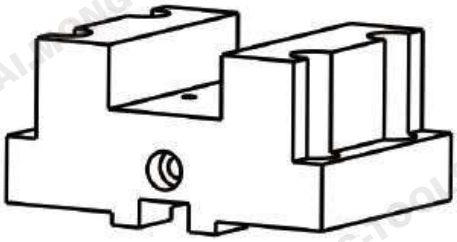

Slot 25X25

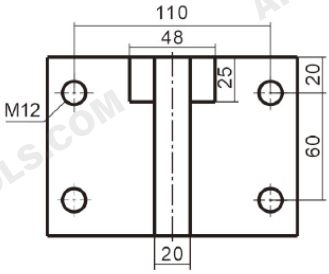

Applicable to Lathes

TAKISAWA

CX-15

Round Tool Block with Middle Coolant

Overall Dimension
78*70*52

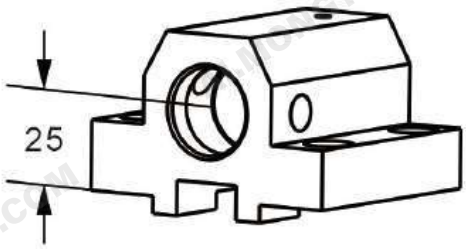

Bore Dia Φ25

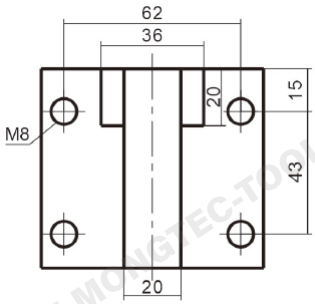

Round Tool Block

Overall Dimension
78*70*52

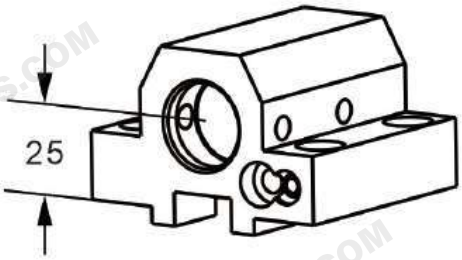

Bore Dia Φ25

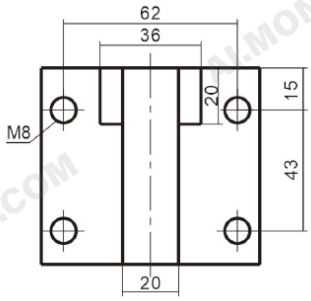

Rectangle Tool Block

Overall Dimension
78*70*50

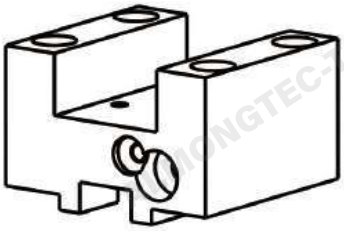

Slot 20X20

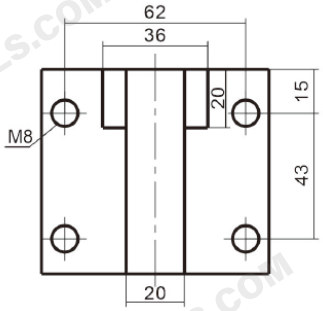

Applicable to Lathes

TAKISAWA

NEX-108M、108Y

Round Tool Block

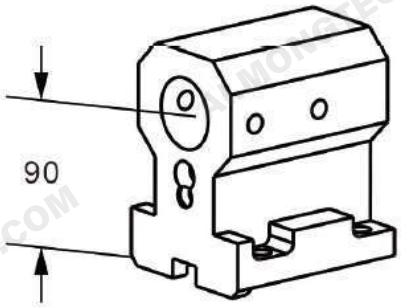

Bore Dia Φ40

Overall Dimension
91*130*110

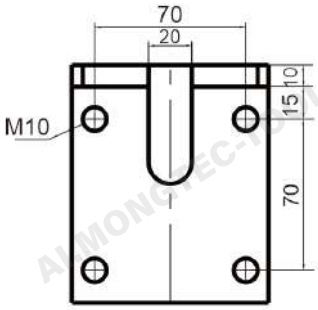

Rectangle Tool Block

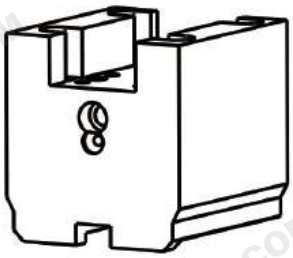

Slot 25X25

Overall Dimension
110*105*110

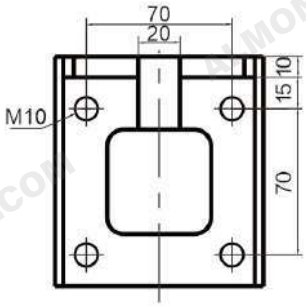

Outer Diameter Boring Holder

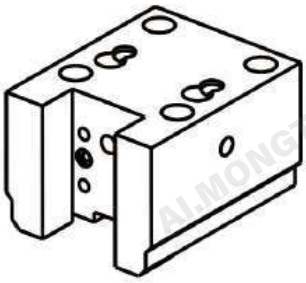

Slot 20X20

Overall Dimension
100*80*125

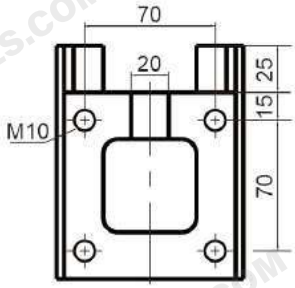

Applicable to Lathes

DOOSAN

PUMA300

Round Tool Block with Back Coolant

Overall Dimension
102*95*84

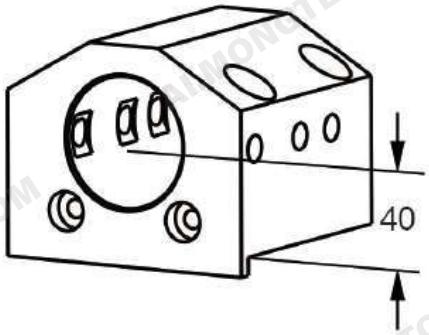

Bore Dia Φ50

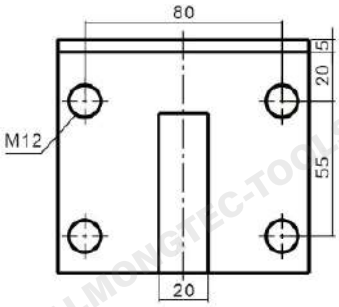

LYNX210

Round Tool Block with Back Coolant

Overall Dimension
93*85*72

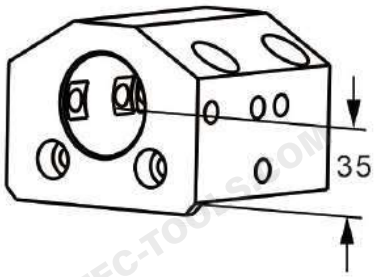

Bore Dia Φ40

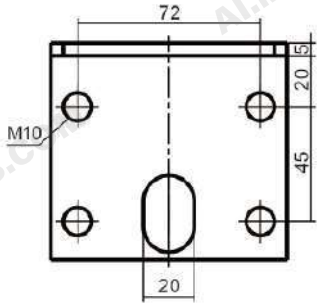

Rectangle Tool Block

Overall Dimension
93*86*55

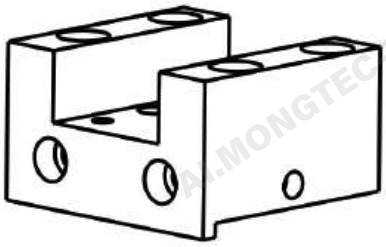

Slot 25X25

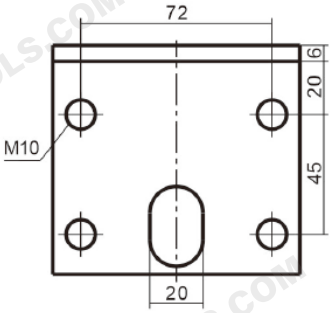

Applicable to Lathes

HARDINGE

Round Tool Block with Back Coolant

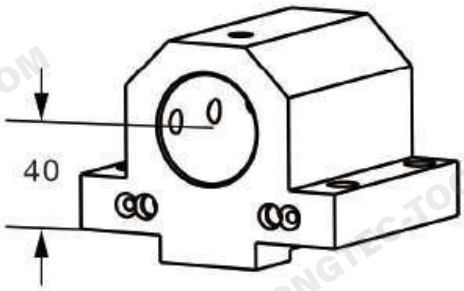

Bore Dia Φ40

Overall Dimension
106*82*90

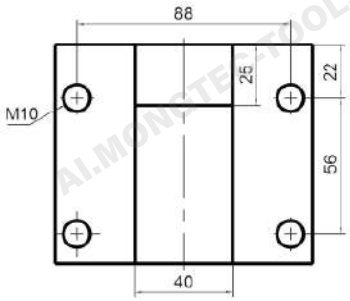

Rectangle Tool Block

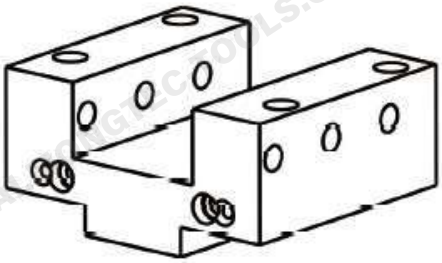

Slot 25X25

Overall Dimension
106*50*90

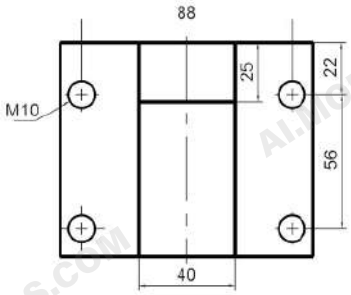

Applicable to Lathes

HARDINGE

Round Tool Block with Back Coolant

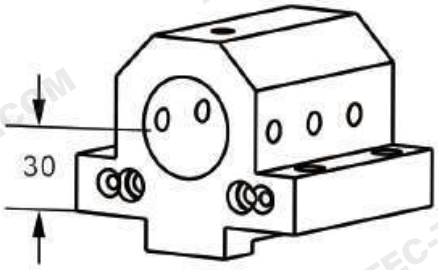

Bore Dia Φ32

Overall Dimension
83*68*75

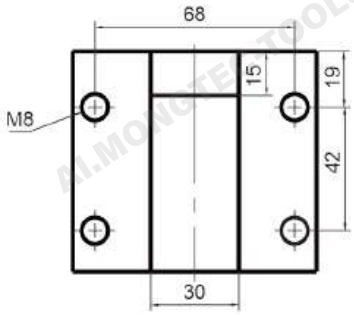

Rectangle Tool Block

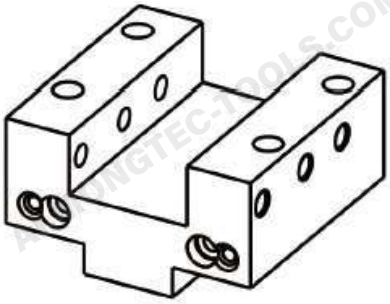

Slot 20X20

Overall Dimension
83*45*80

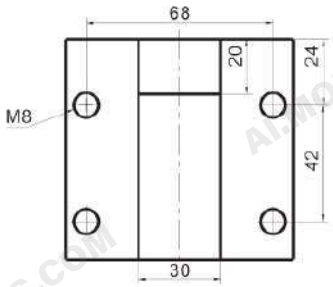

Applicable to Lathes

TSUGAMI

M08J

Round Tool Block with Middle Coolant

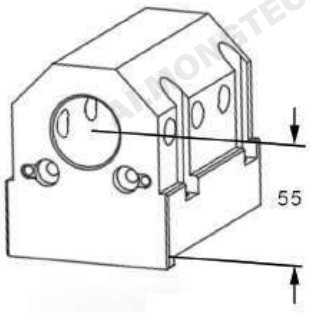

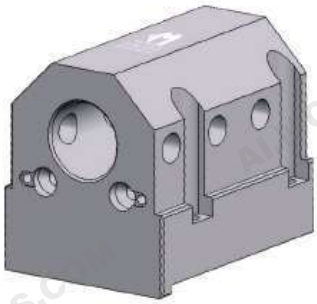

Bore Dia Φ20/32

Overall Dimension
78*106*89.5

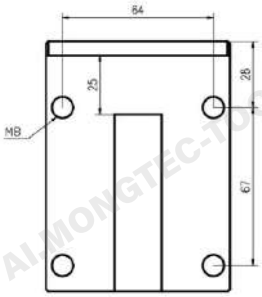

Round Tool Block with Back Coolant

Overall Dimension
95*106*64.5

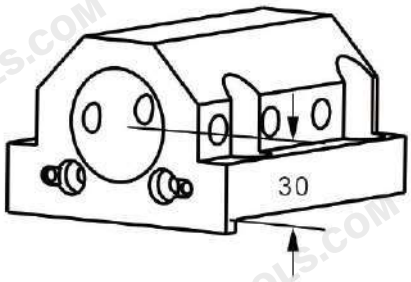

Bore Dia Φ40/32

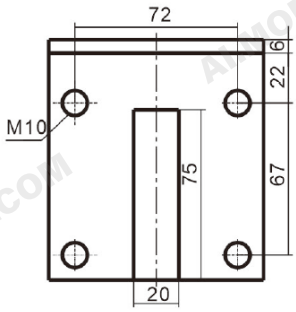

Rectangle Tool Block

Overall Dimension
98*106*59.5

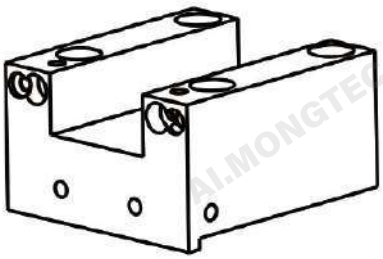

Slot 25X25

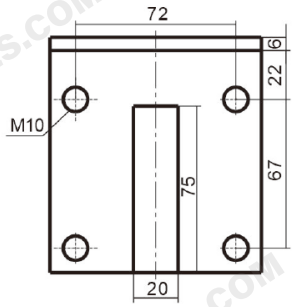

Applicable to Lathes

HYUNDAI WIA

Round Tool Block with Back Coolant

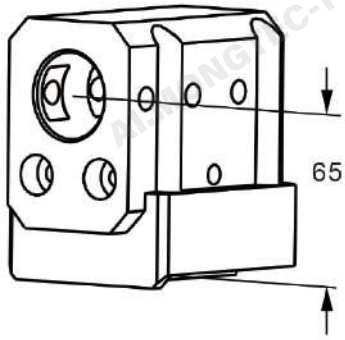

Bore Dia Φ32

Overall Dimension
78*90*98

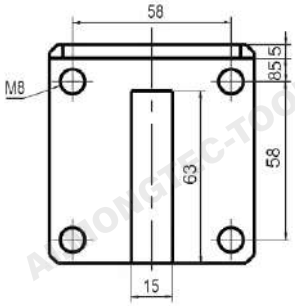

Rectangle Tool Block

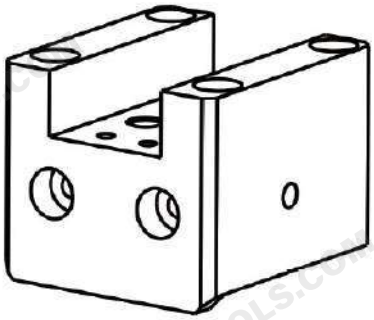

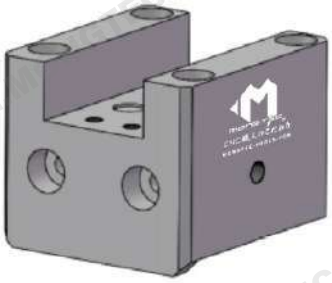

Slot 20X20

Overall Dimension
75*82*65

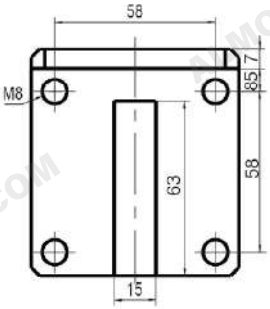

Outer Diameter Boring Holder

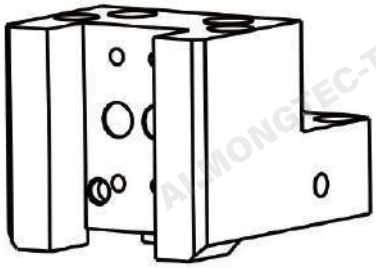

Slot 20X20

Overall Dimension
75*96*70

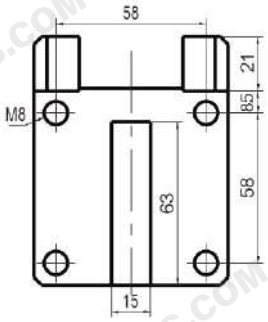

Applicable to Lathes

HONGDA

Round Tool Block

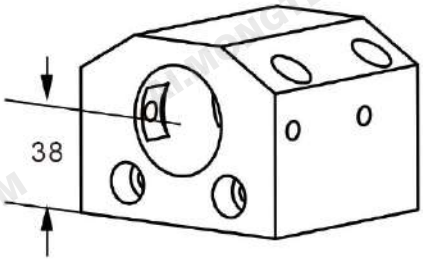

Bore Dia Φ40

Overall Dimension
90*80*72

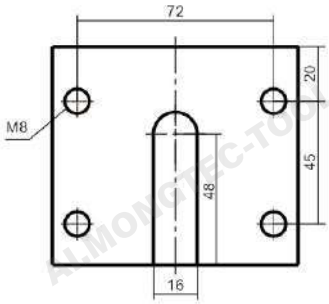

Overall Dimension
95*80*54.5

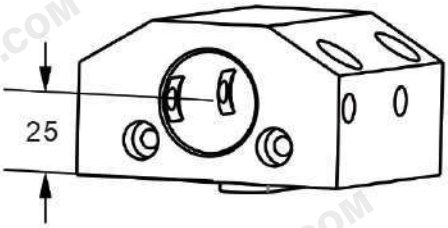

Bore Dia Φ32

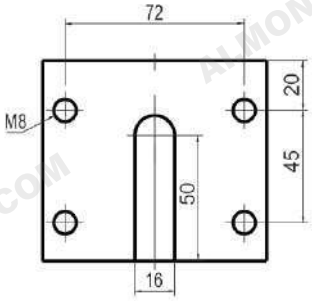

Rectangle Tool Block

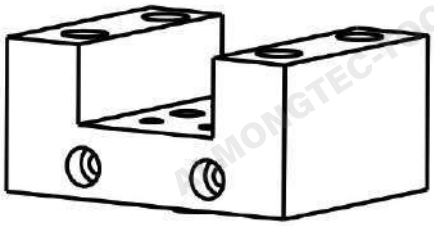

Slot 25X25

Overall Dimension
90*80*52.5

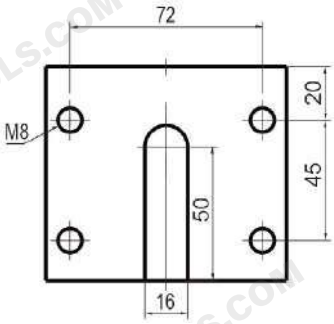

Applicable to Lathes

GSA+

Round Tool Block

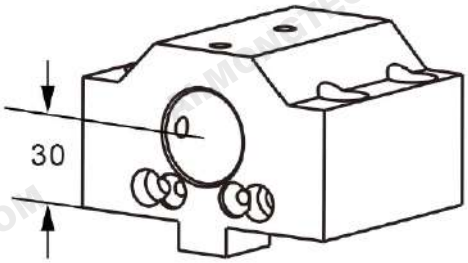

Bore Dia Φ32

Overall Dimension
100*70*80

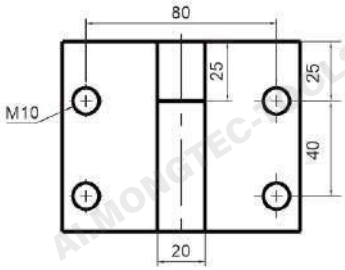

Round Tool Block

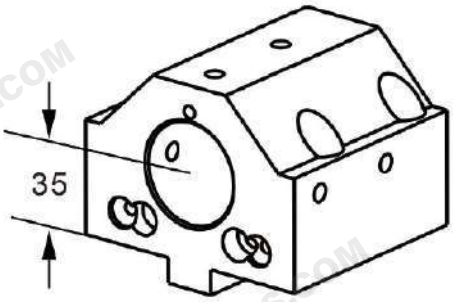

Bore Dia Φ40

Overall Dimension
98*80*90

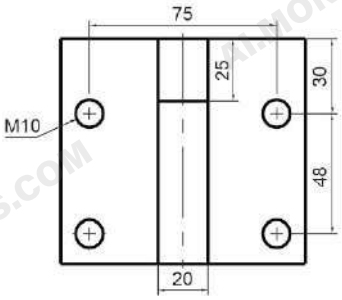

Rectangle Tool Block

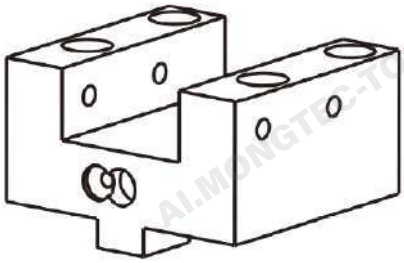

Slot 25X25

Overall Dimension
98*60*90

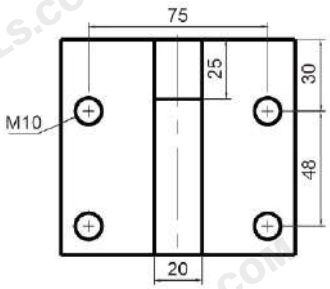

Applicable to Lathes

PRAGATI

Round Tool Block

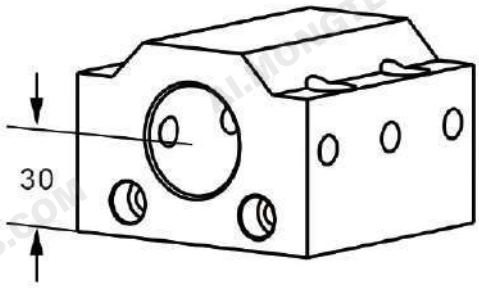

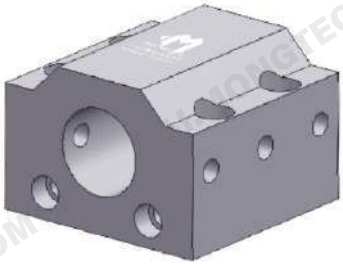

Bore Dia Φ32

Overall Dimension
82*62*80

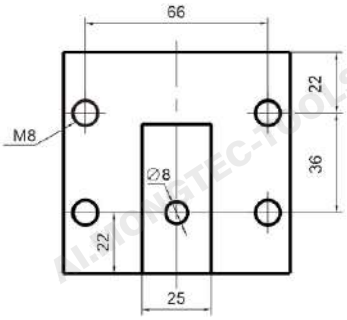

Rectangle Tool Block

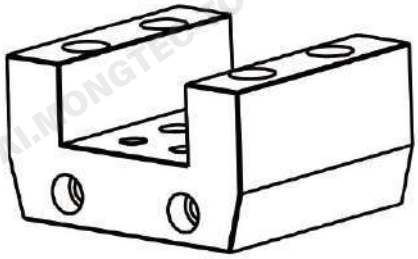

Slot 25X25

Overall Dimension
92*55*80

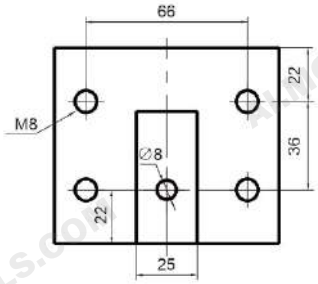

Applicable to Lathes

PRAGATI

Round Tool Block

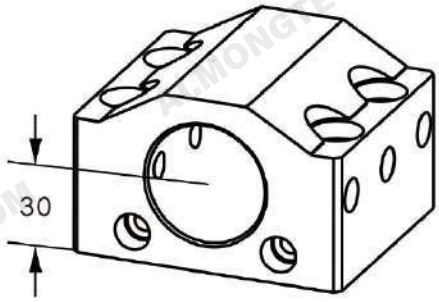

Bore Dia Φ40

Overall Dimension
92*64*80

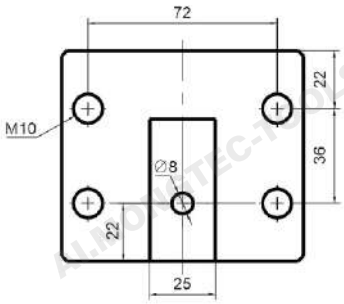

Rectangle Tool Block

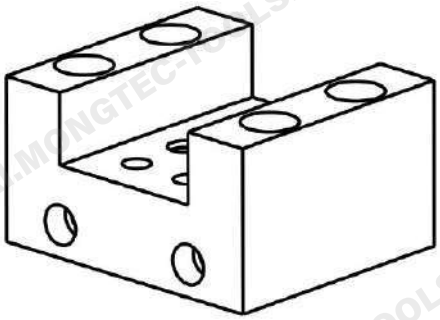

Slot 25X25

Overall Dimension
92*55*80

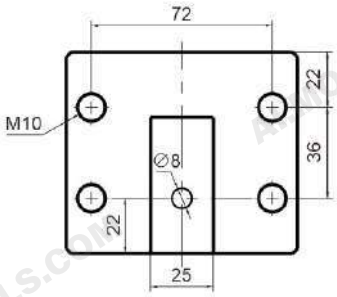

Applicable to Lathes

SAUTER

Round Tool Block with Back Coolant

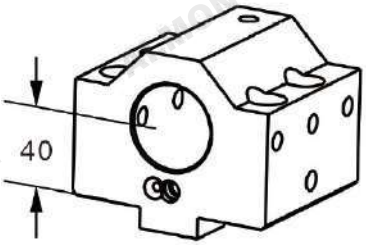

Bore Dia Φ40

Overall Dimension
100*85*84

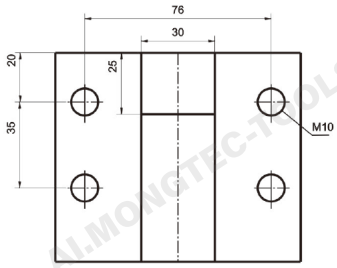

Rectangle Tool Block

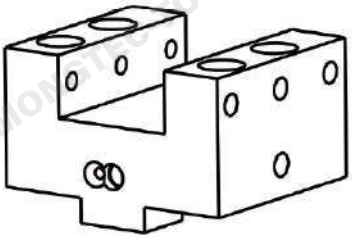

Slot 25X25

Overall Dimension
100*85*65

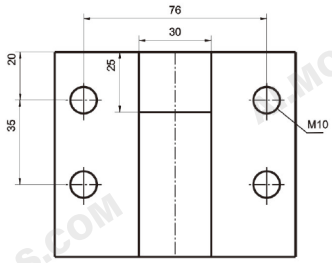

Applicable to Lathes

LIO SHING

LS-160(8T)

Round Tool Block

Overall Dimension
84*80*67

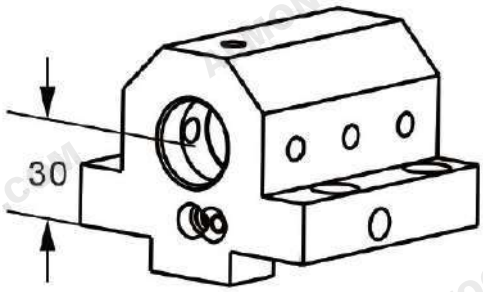

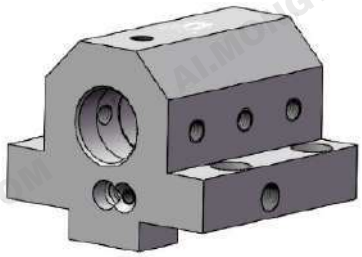

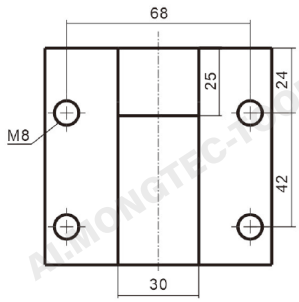

Bore Dia Φ32/25

LS-240(12T)、200(12T)、160

Round Tool Block

Overall Dimension
84*80*67

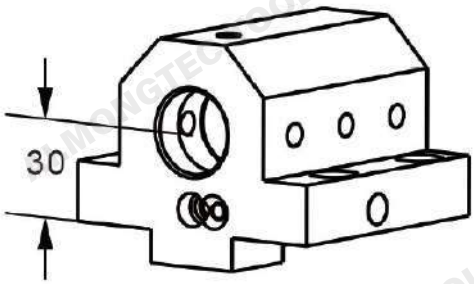

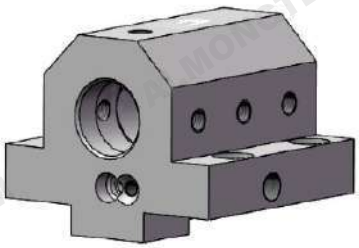

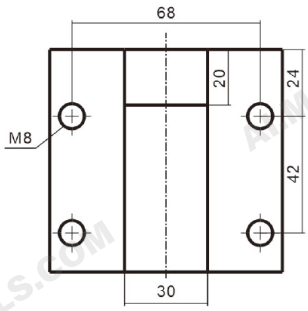

Bore Dia Φ32/25

Applicable to Lathes

SUCCESSFUL CASES

Round Tool Block

Overall Dimension
118*118*90

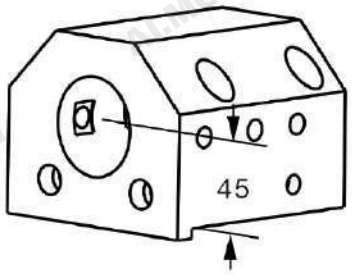

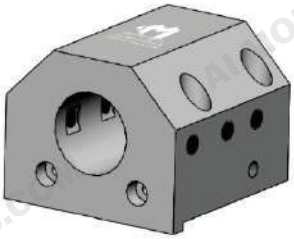

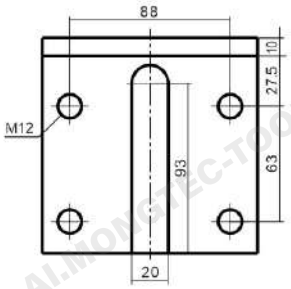

Bore Dia Φ50

Rectangle Tool Block

Overall Dimension
118*118*62

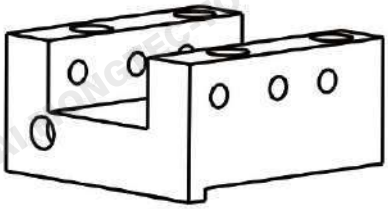

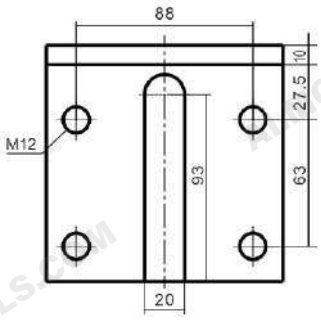

Slot 32X32

Applicable to Lathes

SUCCESSFUL CASES

Round Tool Block with Back Coolant

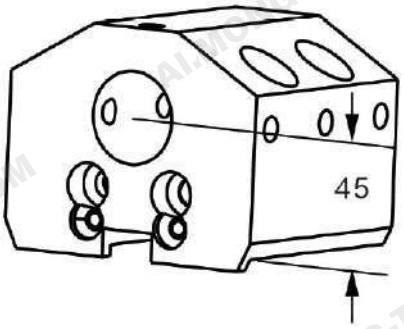

Bore Dia Φ40/32

Overall Dimension
100*90*80

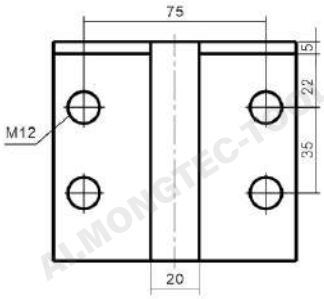

Round Tool Block

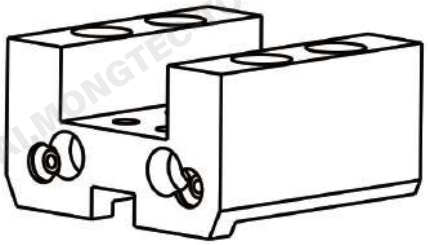

Slot 25X25

Overall Dimension
100*95*56

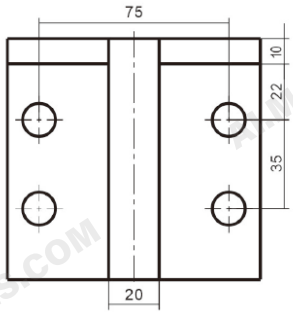

Facebook WeChat YouTube Mongtec Web LINE WhatsApp

Mongtec Precision Inc.

TEL : +886-4-22653360

FAX : +886-4-22653386

E-mail : info@mongtec.com

No. 87, Sec. 1, Daqing St., South Dist., Taichung City 402024, Taiwan (R.O.C.)

Ver 2026.09