MONGTEC®
CNC職人のこだわり

Mongtec PSC

mongtec | mongtec-tools.com | ai.mongtec-tools.com | info@mongtec.com

Table of contents

Naming And Coding Rules 4

External Turning Tool Body

DCLNR/L-Kr 95° 5
DCMNN-Kr 50° 7
DCRNR/L-Kr 75° 8
DDJNR/L-Kr 93° DDHNR/L-Kr 107.5° DDNNN-Kr 62.5° 10
DDMNL-Kr 93° 12
DSKNR/L-Kr 75° DSDNN-Kr 45° DSSNR/L-Kr 45° 13
DWLNR/L-Kr 95° 16
DVJNR/L-Kr 93° DVVNN-Kr 72.5° 18
DTJNR/L-Kr 93° 19
DRSNR/L 21
PCLNR/L-Kr 95° 22
PCLNR/L-Kr 95(° HP) PCMNN-Kr 50(° HP) 24
PCRNR/L-Kr 75(° HP) 26
PDJNR/L-Kr 93° PDUNR/L-Kr 93° 27
PDJNR/L-Kr 93(° HP) PDUNR/L-Kr 93(° HP) 29
PRSCR/L 31
PRSCR/L-C 32
PSSNR/L-Kr 45(° HP) 33
PSKNR/L-Kr 75° 35
PSKNR/L-Kr 75(° HP) PSDNN-Kr 45(° HP) PSRNR/L-Kr 75(° HP) 36
SCLCR/L-Kr 95° 37
SDJCR/L-Kr 93° SDNCN-Kr 62.5° 39
SVHBR/L-Kr 107.5° SVJBR/L-Kr 93° SVMBR/L-Kr 95° 40
SVUBR/L-Kr 93° 42
SRDCN SRSCR/L 43
SRSCR/L(HP) 45

Internal Turning Tool Body

DCLNR/L-Kr 95° 46
DDUNR/L-Kr 93° 47
DWLNR/L-Kr 95° 48
PCLNR/L-Kr 95° 49
PCLNR/L-Kr 95(° HP) 51
PSKNR/L-Kr 75° 53
PSKNR/L-Kr 75° (HP) 54
PDUNR/L-Kr 93(° HP) 56
PTFNR/L-Kr 91°(HP) 58
SCLCR/L-Kr 95° 59
SCLCR/L-Kr 93°(HP) 61
SDUCR/L-Kr 93° 62

Specifications and dimensions are for reference only and subject to change without notice. Please confirm the latest specifications before ordering.

Table of contents

Internal Turning Tool Body

SDUCR/L-Kr 93°(HP) 64
STFCR/L-Kr 91° 65
STFCR/L-Kr 91° (HP) 66
SVQBR/L-Kr 107.5° 67
SVQBR/L-Kr 107.5(° HP) 69

PSC Face Slotting Adapter

PSC-SR Face Slotting Adapter-F 70
PSC-SR Adapter Handle-F 72
PSC-SR Adapter Handle 74
PSC-SR Adapter Handle-R/L 75
PSC-SR Adapter Handle 76
PSC-SR Adapter Handle-R/LX 77
PSC-SR Adapter Handle-R/LX-T 79
PSC-SR Adapter Handle-R/LX-L1 80
PSC-SR70 Adapter Handle-R/LF 81
PSC-SR70 Adapter Handle-R/LG 82
PSC-SR70 Adapter Handle-R/LX 83
PSC-SR Face Slotting Adapter 84
PSC-SR Face Slotting Adapter-R/L 86

Tool Holder Adaptor

Tool Holder Adaptor Naming And Coding Rules 89
General Purpose 0° Adaptor 90
General Purpose 90° Adaptor 91
General Purpose 0° Both-sides Adaptor 92
General Purpose 0° tri-sides Adaptor 93
General Purpose 45° Adaptor 94

PSC Clamping Unit

PSC Blank 95
PSC Clamping Unit Naming And Coding Rules 97
CUSA 98
Clamping device R \ L Rusa application design description 99
VDI External Receiver 100
VDI Machine Tool Interface Center Pull Stud Clamping 102
Horizontal Lathe Receiver 103
PSC Square Shank Internal Receiver 104
Hydraulic Actuated Receiver-High-pressure cooling 105
Hydraulic Actuated Receiver-Low-pressure cooling 106

Specifications and dimensions are for reference only and subject to change without notice. Please confirm the latest specifications before ordering.

Table of contents

Adaptor

Adaptor Naming And Coding Rules	107
PSC Extension Adaptor	108
PSC Extension Adaptor	109
PSC Reduction Adaptor	110
PSC Side Lock End Mill Holder	113
PSC Side Lock End Mill Holder-Axial	115
PSC with Type ER	117
PSC with Type Arbor Adaptor	118
SK with Type PSC Adaptor	120
HSK with Type PSC Adaptor	122
BT with Type PSC Adapto	123
BT with Type PSC Adaptor	124

Specifications and dimensions are for reference only and subject to change without notice. Please confirm the latest specifications before ordering.

Naming And Coding Rules

PSC40	-	D	C	L	N	R	-	27	050	-	12	X
01		02	03	04	05	06		07	08		09	10

01 Coupling Type	
PSC	32
	40
	50
	63
	80
	100

02 Clamping	
D	Platen
P	Hook
S	Screw

06 Direction of Tool	
L	Left
R	Right
N	Null

Insert

03 Shape	05 Angle		09 Length
CC12	DC07	RC10	VB16
CN12	DC11	RC16	VN16
CN16	DN11	SN12	WN06
CN19	DN15	SN19	WN08
			TN16

07 F1 Size

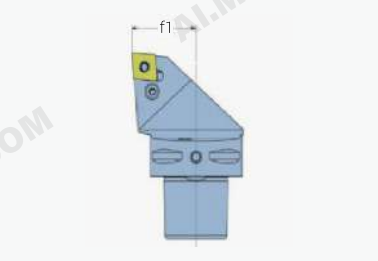

08 L1 Size

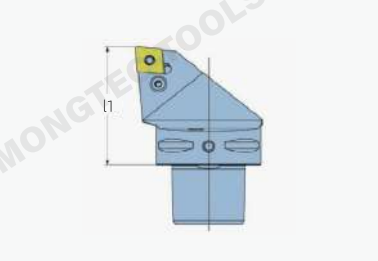

04 Kr

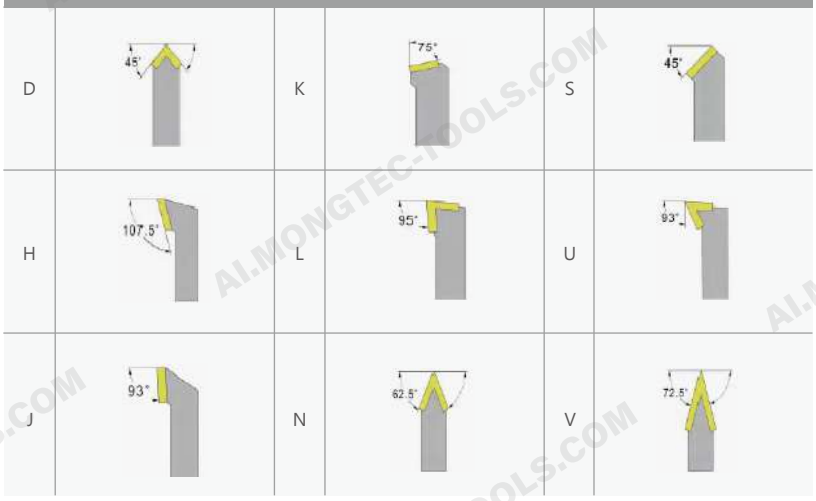

10	
X	Back Boring
HP	High Pressure Cooling
C	Top And Bottom Cooling

Specifications and dimensions are for reference only and subject to change without notice. Please confirm the latest specifications before ordering.

DCLNR/L-Kr 95°

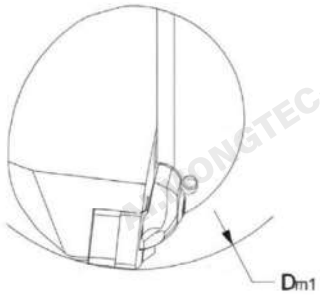

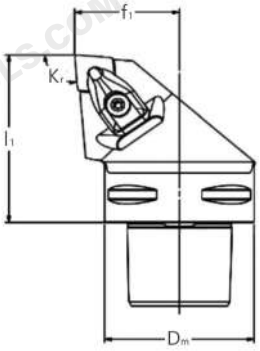

CNMM CNMG CNMA CNGA
The insert is for illustration only

› Technical parameters

Unit：mm

80°	Ordering code	DmD	m1	f1	l1	γ	λ	m (kg)	ISO insert
12	PSC32-DCLNR-22045-12	32	60	22	45	-6°	-6°	0.2	CN.. 1204..
12	PSC32-DCLNL-22045-12	32	60	22	45	-6°	-6°	0.2	
12	PSC40-DCLNR-27050-12	40	110	27	50	-6°	-6°	0.37	
12	PSC40-DCLNL-27050-12	40	110	27	50	-6°	-6°	0.37	
12	PSC50-DCLNR-35060-12	50	110	35	60	-6°	-6°	0.7	
12	PSC50-DCLNL-35060-12	50	110	35	60	-6°	-6°	0.7	
12	PSC63-DCLNR-45065-12	63	110	45	65	-6°	-6°	1.2	
12	PSC63-DCLNL-45065-12	63	110	45	65	-6°	-6°	1.2	
12	PSC80-DCLNR-55080-12	80	110	55	80	-6°	-6°	2.62	
12	PSC80-DCLNL-55080-12	80	110	55	80	-6°	-6°	2.62	
16	PSC40-DCLNR-27055-16	40	125	27	55	-6°	-6°	0.4	CN.. 1606..
16	PSC40-DCLNL-27055-16	40	125	27	55	-6°	-6°	0.4	
16	PSC50-DCLNR-35060-16	50	125	35	60	-6°	-6°	0.7	
16	PSC50-DCLNL-35060-16	50	125	35	60	-6°	-6°	0.7	
16	PSC63-DCLNR-45065-16	63	125	45	65	-6°	-6°	1.2	
16	PSC63-DCLNL-45065-16	63	125	45	65	-6°	-6°	1.2	
16	PSC80-DCLNR-55080-16	80	125	55	80	-6°	-6°	2.44	
16	PSC80-DCLNL-55080-16	80	125	55	80	-6°	-6°	2.44	

see next page →

Specifications and dimensions are for reference only and subject to change without notice. Please confirm the latest specifications before ordering.

DCLNR/L-Kr 95°

› Technical parameters

Unit：mm

80°	Ordering code	Dm	Dm1f	1l	1	γ	λ	m (kg)	ISO insert
19	PSC50-DCLNR-35060-19	508	03	5	60	-6°	-6°	0.7	CN.. 1906..
19	PSC50-DCLNL-35060-19	508	03	5	60	-6°	-6°	0.7	
19	PSC63-DCLNR-45065-19	63	81	45	65	-6°	-6°	1.2	
19	PSC63-DCLNL-45065-19	63	81	45	65	-6°	-6°	1.2	
19	PSC80-DCLNR-55080-19	80	100	55	80	-6°	-6°	2.44	
19	PSC80-DCLNL-55080-19	80	100	55	80	-6°	-6°	2.44	
25	PSC80-DCLNR-55080-25	80	100	55	80	-6°	-6°	2.47	CN.. 2509..
25	PSC80-DCLNL-55080-25	80	100	55	80	-6°	-6°	2.47	

› Main spare parts

PSC size	Insert	Shim screw	Shim	Key	Complete clamp set
PSC32	12	ILD4085	322.236.03	248.150.10	412.028.021
PSC40-PSC80	12	ILD4085	322.234.01	248.150.10	412.028.021
PSC40-PSC80	16	ILD5011	322.234.03	248.200.10	412.028.031
PSC50-PSC80	19	ILD5011	322.236.01	248.200.10	413.028.041
PSC80	25	ILD6012	322.234.05	245.250.10	413.028.051

The insert need to be ordered seperately. Other accessories are included in the order

The sapare parts can be ordered separately. Please inquire on demand

Specifications and dimensions are for reference only and subject to change without notice. Please confirm the latest specifications before ordering.

DCMNN-Kr 50°

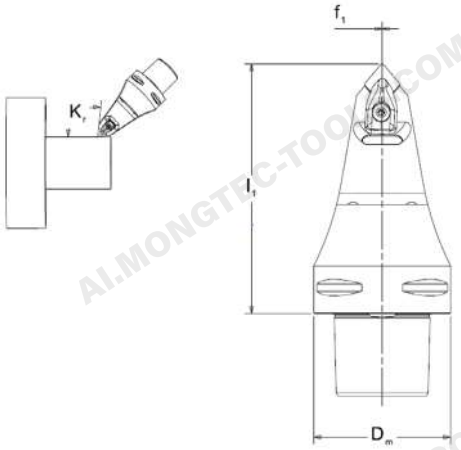

CNMM CNMG CNMA CNGA
The insert is for illustration only

› Technical parameters

Unit：mm

55°	Ordering code	Dm	f1	l1	γ	λ	m (kg)	ISO insert
12	PSC50-DCMNN-00105-12	50	0	105	-6°	-6°	1.14	CN.. 1204..
12	PSC63-DCMNN-00090-12	63	09	0	-6°	-6°	1.39	
12	PSC63-DCMNN-00115-12	63	0	115	-6°	-6°	1.84	
16	PSC63-DCMNN-00090-16	63	09	0	-6°	-6°	1.32	CN.. 1606..
16	PSC80-DCMNN-00150-16	80	0	150	-6°	-6°	4	

› Main spare parts

PSC size	Insert	Shim screw	Shim	Key	Complete clamp set
PSC50-PSC63	12	ILD4085	322.234.01	248.150.10	412.028.021
PSC63-PSC80	16	ILD5011	322.234.03	248.200.10	412.028.031

The insert need to be ordered seperately. Other accessories are included in the order
The sapare parts can be ordered separately. Please inquire on demand

Specifications and dimensions are for reference only and subject to change without notice. Please confirm the latest specifications before ordering.

DCRNR/L-Kr 75°

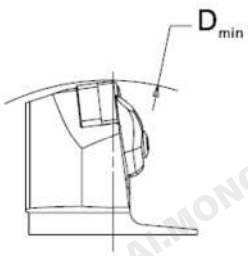

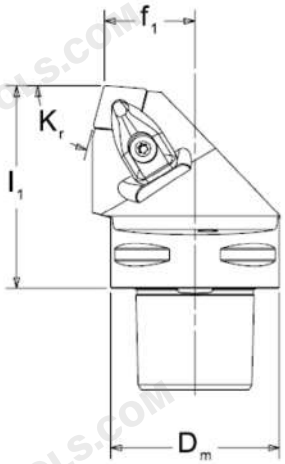

CNMM CNMG CNMA CNGA
The insert is for illustration only

› Technical parameters

Unit：mm

55°	Ordering code	Dm	Dmin	f1	l1	γ	λ	m (kg)I	SO insert
12	PSC40-DCRNR-22050-12	40	140	22	50	-6°	-6°	0.46	CN.. 1204..
12	PSC40-DCRNL-22050-12	40	140	22	50	-6°	-6°	0.46	
12	PSC50-DCRNR-27060-12	50	165	27	60	-6°	-6°	0.75	
12	PSC50-DCRNL-27060-12	50	165	27	60	-6°	-6°	0.75	
12	PSC63-DCRNR-35065-12	63	190	35	65	-6°	-6°	1.40	
12	PSC63-DCRNL-35065-12	63	190	35	65	-6°	-6°	1.40	
16	PSC50-DCRNR-27060-16	50	165	27	60	-6°	-6°	0.74	CN.. 1606..
16	PSC50-DCRNL-27060-16	50	165	27	60	-6°	-6°	0.74	
16	PSC63-DCRNR-35065-16	63	190	35	65	-6°	-6°	1.34	
16	PSC63-DCRNL-35065-16	63	190	35	65	-6°	-6°	1.34	
16	PSC80-DCRNR-55080-16	80	250	55	80	-6°	-6°	2.68	
16	PSC80-DCRNL-55080-16	80	250	55	80	-6°	-6°	2.68	
19	PSC63-DCRNR-35065-19	63	190	35	65	-6°	-6°	1.33	CN.. 1906..
19	PSC63-DCRNL-35065-19	63	190	35	65	-6°	-6°	1.33	
19	PSC80-DCRNR-55080-19	80	250	55	80	-6°	-6°	2.68	
19	PSC80-DCRNL-55080-19	80	250	55	80	-6°	-6°	2.68	

see next page →

Specifications and dimensions are for reference only and subject to change without notice. Please confirm the latest specifications before ordering.

DCRNR/L-Kr 75°

› Main spare parts

PSC size	Insert	Shim screw	Shim	Key	Complete clamp set
PSC40-PSC63	12	ILD4085	322.234.01	248.150.10	412.028.021
PSC50-PSC80	16	ILD5011	322.234.03	248.200.10	412.028.031
PSC63-PSC80	19	ILD5011	322.236.01	248.200.10	413.028.041

The insert need to be ordered seperately. Other accessories are included in the order

The sapare parts can be ordered separately. Please inquire on demand

Specifications and dimensions are for reference only and subject to change without notice. Please confirm the latest specifications before ordering.

DDJNR/L-Kr 93° DDHNR/L-Kr 107.5° DDNNN-Kr 62.5°

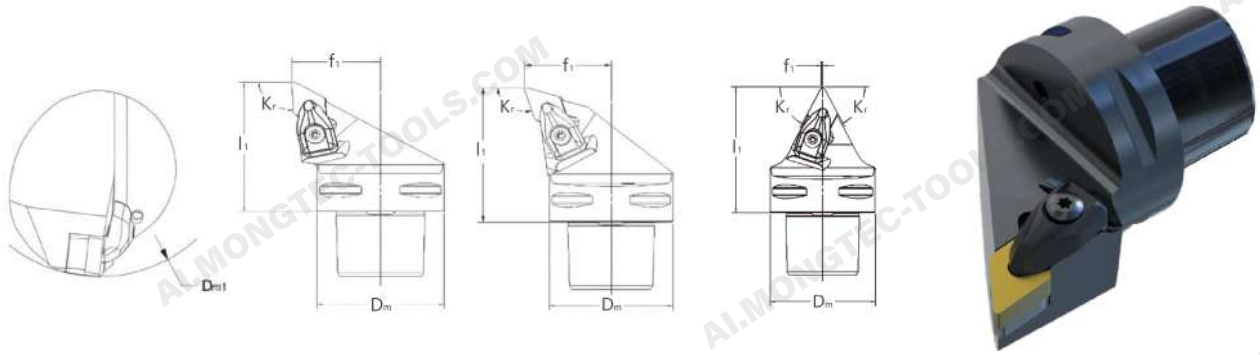

DNMM DNMX DNMG DNMA DNGA

The insert is for illustration only

› Technical parameters

Unit：mm

55°	Ordering code	Dm	Dm1f	1l	1	γ	λ	m (kg)I	SO insert
11	PSC32-DDJNR-22045-11	32	60	22	45	-6°	-7°	0.19	DN.. 1104..
11	PSC32-DDJNL-22045-11	32	60	22	45	-6°	-7°	0.19	
11	PSC40-DDJNR-27050-11	40	60	27	50	-6°	-7°	0.34	
11	PSC40-DDJNL-27050-11	40	60	27	50	-6°	-7°	0.34	
11	PSC50-DDJNR-35060-11	50	65	35	60	-6°	-7°	0.65	
11	PSC50-DDJNL-35060-11	50	65	35	60	-6°	-7°	0.65	
11	PSC63-DDJNR-45065-11	63	81	45	65	-6°	-7°	1.08	
11	PSC63-DDJNL-45065-11	63	81	45	65	-6°	-7°	1.08	
15	PSC40-DDJNR-27055-15	40	110	27	55	-6°	-7°	0.36	DN.. 1506..
15	PSC40-DDJNL-27055-15	40	110	27	55	-6°	-7°	0.36	
15	PSC50-DDJNR-35060-15	50	110	35	60	-6°	-7°	0.36	
15	PSC50-DDJNL-35060-15	50	110	35	60	-6°	-7°	0.36	
15	PSC63-DDJNR-45065-15	63	110	45	65	-6°	-7°	1.05	
15	PSC63-DDJNL-45065-15	63	110	45	65	-6°	-7°	1.05	
15	PSC80-DDJNR-55080-15	80	110	55	80	-6°	-7°	2.16	
15	PSC80-DDJNL-55080-15	80	110	55	80	-6°	-7°	2.16	

see next page →

Specifications and dimensions are for reference only and subject to change without notice. Please confirm the latest specifications before ordering.

DDJNR/L-Kr 93° DDHNR/L-Kr 107.5° DDNNN-Kr 62.5°

› Technical parameters

Unit：mm

55°	Ordering code	Dm	Dm1f	1l	1	γ	λ	m (kg)	ISO insert
15	PSC40-DDHNR-27055-15	40	110	27	55	-6°	-7°	0.38	DN.. 1506..
15	PSC40-DDHNL-27055-15	40	110	27	55	-6°	-7°	0.38	
15	PSC50-DDHNR-35060-15	50	110	35	60	-6°	-7°	0.66	
15	PSC50-DDHNL-35060-15	50	110	35	60	-6°	-7°	0.66	
15	PSC63-DDHNR-45065-15	63	110	456	5	-6°	-7°	1.15	
15	PSC63-DDHNL-45065-15	63	110	456	5	-6°	-7°	1.15	
15	PSC80-DDHNR-55080-15	80	110	55	80	-6°	-7°	2.36	
15	PSC80-DDHNL-55080-15	80	110	55	80	-6°	-7°	2.36	
15	PSC40-DDNNN-00055-15	40	-	0.5	55	-5°	-9°	0.38	DN.. 1506..
15	PSC50-DDNNN-00060-15	50	-	0.5	60	-5°	-9°	0.62	
15	PSC63-DDNNN-00065-15	63	-	0.5	65	-5°	-9°	1.06	
15	PSC80-DDNNN-00080-15	80	-	0.5	80	-5°	-9°	2.1	
15	PSC80-DDUNR-55080-15	80	80	55	80	-6°	-7°	2.7	
15	PSC80-DDUNL-55080-15	80	80	55	80	-6°	-7°	2.7	

› Main spare parts

PSC size	Insert	Shim screw	Shim	Key	Complete clamp set
PSC32-PSC63	11	ILD3072	322.267.01	242.090.404	12.028.011
PSC40-PSC80	15	ILD4085	322.266.02	248.150.104	12.028.021

The insert need to be ordered seperately. Other accessories are included in the order

The sapare parts can be ordered separately. Please inquire on demand

Specifications and dimensions are for reference only and subject to change without notice. Please confirm the latest specifications before ordering.

DDMNL-Kr 93°

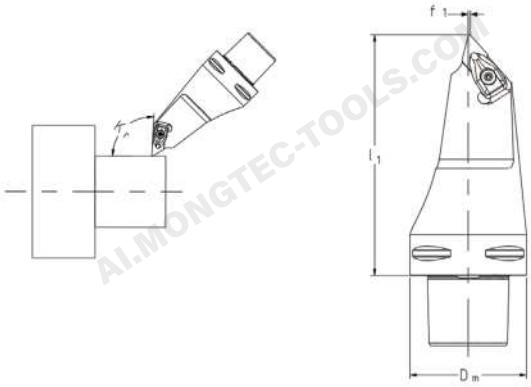

DNMM DNMX DNMG DNMA DNGA
The insert is for illustration only

› Technical parameters

Unit：mm

55°	Ordering code	Dm	f1	l1	γ	λ	m (kg)	ISO insert
15	PSC50-DDMNL-00115-15	50	1	115	-5°	-6°	1.24	DN.. 1506..
15	PSC63-DDMNL-00130-15	63	1	130	-5°	-6°	2.05	
15	PSC63-DDMNL-33120-15	63	1	120	-5°	-6°	2.12	
15	PSC80-DDMNL-00160-15	80	1	160	-5°	-6°	4.13	

› Main spare parts

PSC size	Insert	Shim screw	Shim	Key	Complete clamp set
PSC50-PSC80	15	ILD4085	322.266.02	248.150.10	412.028.021

The insert need to be ordered seperately. Other accessories are included in the order
The sapare parts can be ordered separately. Please inquire on demand

Specifications and dimensions are for reference only and subject to change without notice. Please confirm the latest specifications before ordering.

DSKNR/L-Kr 75° DSDNN-Kr 45° DSSNR/L-Kr 45°

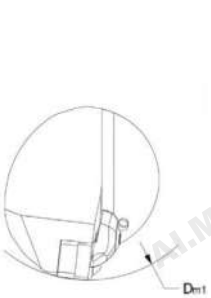

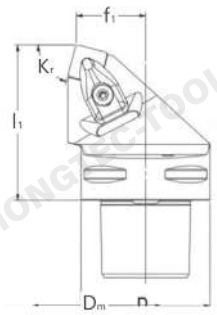

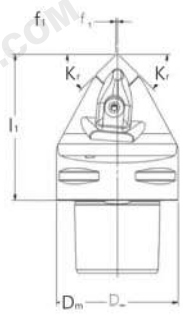

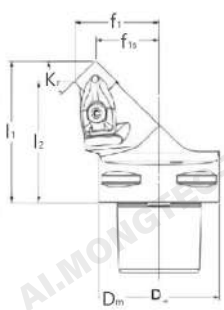

SNMM SNMG SNMA SNGA
The insert is for illustration only

› Technical parameters

Unit：mm

90°	Ordering code	Dm	Dm1	f1	l1	f1sl	1s	γ	λ	m (kg)	ISO insert
12	PSC32-DSKNR-22040-12	32	60	22	40	--		-6°-	6°	0.2	SN..1204..
12	PSC32-DSKNL-22040-12	32	60	22	40	--		-6°-	6°	0.2	
12	PSC40-DSKNR-27050-12	40	110	27	50	--		-6°-	6°	0.35	
12	PSC40-DSKNL-27050-12	40	110	27	50	--		-6°-	6°	0.35	
12	PSC50-DSKNR-35060-12	50	110	35	60	--		-6°-	6°	0.75	
12	PSC50-DSKNL-35060-12	50	110	35	60	--		-6°-	6°	0.75	
12	PSC63-DSKNR-45065-12	63	110	45	65	--		-6°-	6°	1.24	
12	PSC63-DSKNL-45065-12	63	110	45	65	--		-6°-	6°	1.24	
15	PSC50-DSKNR-35060-15	50	125	35	60	--		-6°-	6°	0.85	SN..1506..
15	PSC50-DSKNL-35060-15	50	125	35	60	--		-6°-	6°	0.85	
15	PSC63-DSKNR-45065-15	63	125	45	65	--		-6°-	6°	1.38	
15	PSC63-DSKNL-45065-15	63	125	45	65	--		-6°-	6°	1.38	
19	PSC50-DSKNR-35060-19	50	125	35	60	--		-6°-	6°	0.76	SN..1906..
19	PSC50-DSKNL-35060-19	50	125	35	60	--		-6°-	6°	0.76	
19	PSC63-DSKNR-45065-19	63	125	45	65	--		-6°-	6°	1.27	
19	PSC63-DSKNL-45065-19	63	125	45	65	--		-6°-	6°	1.27	
19	PSC80-DSKNR-55080-19	80	125	55	80	--		-6°-	6°	2.54	
19	PSC80-DSKNL-55080-19	80	125	55	80	--		-6°-	6°	2.54	

see next page →

Specifications and dimensions are for reference only and subject to change without notice. Please confirm the latest specifications before ordering.

DSKNR/L-Kr 75° DSDNN-Kr 45° DSSNR/L-Kr 45°

› Technical parameters

Unit：mm

90°	Ordering code	Dm	Dm1f	1l	1f	1s	l1s	γ	λ	m (kg)	ISO insert
12	PSC32-DSRNR-19048-12	32	124	19	48	--		-6°	-6°	0.26	SN..1204..
12	PSC32-DSRNL-19048-12	32	124	19	48	--		-6°	-6°	0.26	
12	PSC40-DSRNR-22050-12	40	140	22	50	--		-6°	-6°	0.4	
12	PSC40-DSRNL-22050-12	40	140	22	50	--		-6°	-6°	0.4	
12	PSC50-DSRNR-27060-12	50	165	27	60	--		-6°	-6°	0.72	
12	PSC50-DSRNL-27060-12	50	165	27	60	--		-6°	-6°	0.72	
19	PSC63-DSRNR-35065-12	63	190	35	65	--		-6°	-6°	1.24	SN..1506..
19	PSC63-DSRNL-35065-12	63	190	35	65	--		-6°	-6°	1.24	
15	PSC50-DSRNR-27060-15	50	165	27	60	-	--	6°	-6°	0.76	
15	PSC50-DSRNL-27060-15	50	165	27	60	--		-6°	-6°	0.76	
19	PSC63-DSRNR-35065-15	63	190	35	65	--		-6°	-6°	1.31	
19	PSC63-DSRNL-35065-15	63	190	35	65	--		-6°	-6°	1.31	
19	PSC63-DSRNR-35065-19	63	190	35	65	--		-6°	-6°	1.3	SN..1906..
19	PSC63-DSRNL-35065-19	63	190	35	65	--		-6°	-6°	1.3	
19	PSC80-DSRNR-45080-19	80	250	45	80	--		-6°	-6°	2.54	
19	PSC80-DSRNL-45080-19	80	250	45	80	--		-6°	-6°	2.54	
12	PSC32-DSDNN-00048-12	32	-0	.3	48	--		-6°	-6°	0.19	SN..1204..
12	PSC40-DSDNN-00050-12	40	-0	.3	50	--		-6°	-6°	0.32	
12	PSC50-DSDNN-00060-12	50	-0	.3	60	--		-6°	-6°	0.61	
12	PSC63-DSDNN-00065-12	63	-0	.3	65	--		-6°	-6°	1.07	
15	PSC50-DSDNN-00060-15	50	-0	.3	60	--		-6°	-6°	0.78	SN..1506..
15	PSC63-DSDNN-00065-15	63	-0	.5	65	--		-6°	-6°	1.2	
19	PSC50-DSDNN-00065-19	50	-0	.5	65	--		-6°	-6°	0.76	SN..1906..
19	PSC63-DSDNN-00070-19	63	-0	.5	70	--		-6°	-6°	1.24	
12	PSC32-DSSNR-22040-12	32	60	22	40	13.7	48.3	-8°0	°0	.19	SN..1204..
12	PSC32-DSSNL-22040-12	32	60	22	40	13.7	48.3	-8°0	°0	.19	
12	PSC40-DSSNR-27042-12	40	110	27	42	18.7	50.3	-8°0	°	0.31	
12	PSC40-DSSNL-27042-12	40	110	27	42	18.7	50.3	-8°0	°	0.31	
12	PSC50-DSSNR-35052-12	50	110	35	52	26.7	60.3	-8°0	°0	.6	
12	PSC50-DSSNL-35052-12	50	110	35	52	26.7	60.3	-8°0	°0	.6	
12	PSC63-DSSNR-45056-12	63	110	45	56	36.7	64.3	-8°0	°0	.99	
12	PSC63-DSSNL-45056-12	63	110	45	56	36.7	64.3	-8°0	°0	.99	

see next page →

Specifications and dimensions are for reference only and subject to change without notice. Please confirm the latest specifications before ordering.

DSKNR/L-Kr 75° DSDNN-Kr 45° DSSNR/L-Kr 45°

› Technical parameters

Unit：mm

90°	Ordering code	Dm	Dm1f	1l	1f	1s	l1s	γ	λ	m (kg)	ISO insert
15	PSC63-DSSNR-45054-156	31	25	45	54	34.8	64.2	-8°0	°1	.12	SN..1506..
15	PSC63-DSSNL-45054-156	31	25	45	54	34.8	64.2	-8°0	°1	.12	
19	PSC63-DSSNR-45052-196	31	25	45	52	32.5	64.5	-8°0	°1	.15	SN..1906..
19	PSC63-DSSNL-45052-196	31	25	45	52	32.5	64.5	-8°0	°1	.15	

› Main spare parts

PSC size	Insert	Shim screw	Shim	Key	Complete clamp set
PSC32	12	ILD40853	22.426.02	248.150.10	412.028.021
PSC40-PSC63	12	ILD40853	22.425.012	48.150.104	12.028.021
PSC50-PSC63	15	ILD50113	22.425.032	48.200.104	12.028.031
PSC50-PSC80	19	ILD50113	22.425.042	48.200.104	12.028.041

The insert need to be ordered seperately. Other accessories are included in the order

The sapare parts can be ordered separately. Please inquire on demand

Specifications and dimensions are for reference only and subject to change without notice. Please confirm the latest specifications before ordering.

DWLNR/L-Kr 95°

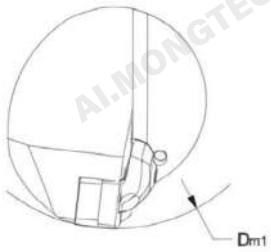

WNMM WNMG WNGA WNMA
The insert is for illustration only

› Technical parameters

Unit：mm

80°	Ordering code	Dm	Dm1	f1	l1	γ	λ	m (kg)	ISO insert
6	PSC32-DWLNR-22040-06	32	60	22	40	-6°-	6°	0.18	WN.. 0604..
6	PSC32-DWLNL-22040-06	32	60	22	40	-6°-	6°	0.18	
6P	SC40-DWLNR-27050-06	40	60	27	50	-6°-	6°	0.35	
6	PSC40-DWLNL-27050-06	40	60	27	50	-6°-	6°	0.35	
6P	SC50-DWLNR-35060-06	50	65	35	60	-6°-	6°	0.67	
6	PSC50-DWLNL-35060-06	50	65	35	60	-6°-	6°	0.67	
6P	SC63-DWLNR-45065-06	63	81	45	65	-6°-	6°	1.21	
6	PSC63-DWLNL-45065-06	63	81	45	65	-6°-	6°	1.21	

see next page →

Specifications and dimensions are for reference only and subject to change without notice. Please confirm the latest specifications before ordering.

DWLNR/L-Kr 95°

› Technical parameters

Unit：mm

80°	Ordering code	Dm	Dm1f	1l	1	γ	λ	m (kg)	ISO insert
8	PSC40-DWLNR-27050-084	0	110	27	50	-6°	-6°	0.35	WN.. 0804..
8P	SC40-DWLNL-27050-08	40	110	27	50	-6°	-6°	0.35	
8P	SC50-DWLNR-35060-085	0	110	35	60	-6°	-6°	0.67	
8P	SC50-DWLNL-35060-08	50	110	35	60	-6°	-6°	0.67	
8P	SC63-DWLNR-45065-086	3	110	45	65	-6°	-6°	1.22	
8P	SC63-DWLNL-45065-08	63	110	45	65	-6°	-6°	1.22	
8P	SC80-DWLNR-55080-088	0	110	55	80	-6°	-6°	2.44	
8	PSC80-DWLNL-55080-08	80	110	55	80	-6°	-6°	2.44	

› Main spare parts

PSC size	Insert	Shim screw	Shim	Key	Complete clamp set
PSC32-PSC63	6	ILD30723	22.328.01	242.090.40	412.028.011
PSC40-PSC80	8	ILD4085	322.331.12	248.150.10	412.028.021

The insert need to be ordered seperately. Other accessories are included in the order

The sapare parts can be ordered separately. Please inquire on demand

Specifications and dimensions are for reference only and subject to change without notice. Please confirm the latest specifications before ordering.

DVJNR/L-Kr 93° DVVNN-Kr 72.5°

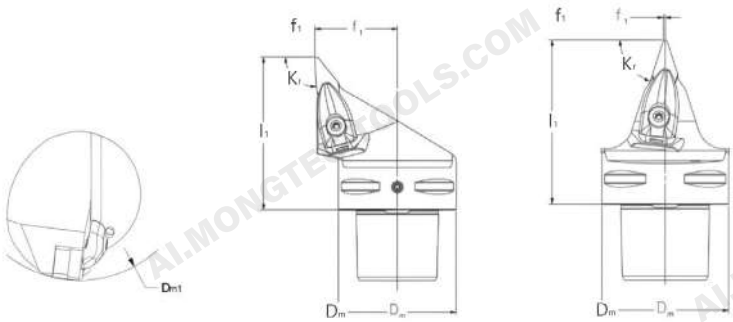

VNMG VNGP

The insert is for illustration only

› Technical parameters

Unit：mm

35°	Ordering code	Dm	Dm1	f1	l1	γ	λ	m (kg)	ISO insert
16	PSC40-DVJNR-27062-164	06	02	76	24	°-	13°	0.4	VN.. 1604..
16P	SC40-DVJNL-27062-164	06	02	76	24	°-	13°	0.4	
16P	SC50-DVJNR-35065-165	06	53	56	54	°-	13°	0.65	
16P	SC50-DVJNL-35065-165	06	53	56	54	°-	13°	0.65	
16P	SC63-DVJNR-45065-166	38	1	45	65	4°	-13°	1.01	
16P	SC63-DVJNL-45065-166	38	1	45	65	4°	-13°	1.01	
16P	SC80-DVJNR-55080-168	01	00	55	80	4°	-13°	2.1	
16P	SC80-DVJNL-55080-168	01	00	55	80	4°	-13°	2.1	
16P	SC40-DVVNN-00062-164	0-		0.66	24	°	-13°	0.41	VN.. 1604..
16P	SC50-DVVNN-00065-165	0-		0.66	54	°-	13°	0.63	
16P	SC63-DVVNN-00065-166	3-		0.66	54	°-	13°	1.03	
16	PSC80-DVVNN-00080-168	0-		0.68	04	°-	13°	2	

› Main spare parts

PSC size	Insert	Shim screw	Shim	Key	Complete clamp set
PSC40-PSC80	16	ILD3581	322.269.01	248.150.104	12.028.61

The insert need to be ordered seperately. Other accessories are included in the order

The sapare parts can be ordered separately. Please inquire on demand

Specifications and dimensions are for reference only and subject to change without notice. Please confirm the latest specifications before ordering.

DTJNR/L-Kr 93°

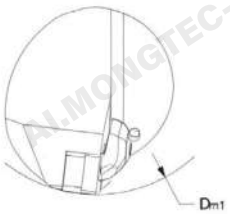

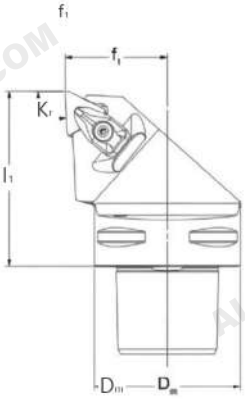

TNMM TNMX TNMG TNMA TNGA
The insert is for illustration only

› Technical parameters

Unit：mm

△	Ordering code	Dm	Dm1f	1l	1	γ	λ	m (kg)	ISO insert
16	PSC32-DTJNR-22040-163	26	02	24	0	-6°	-6°	0.2KG	TN..1604..
16	PSC32-DTJNL-22040-163	26	02	24	0	-6°	-6°	0.2KG	
16	PSC40-DTJNR-27050-164	0	110	27	50	-6°	-6°	0.43	
16	PSC40-DTJNL-27050-164	0	110	27	50	-6°	-6°	0.43	
16	PSC50-DTJNR-35060-165	0	110	35	60	-6°	-6°	0.78	
16	PSC50-DTJNL-35060-165	0	110	35	60	-6°	-6°	0.78	
16	PSC63-DTJNR-45065-166	3	110	45	65	-6°	-6°	1.34	
16	PSC63-DTJNL-45065-166	3	110	45	65	-6°	-6°	1.34	
22	PSC40-DTJNR-27050-224	0	110	27	50	-6°	-6°	0.5	TN..2204..
22	PSC40-DTJNL-27050-224	0	110	27	50	-6°	-6°	0.5	
22	PSC50-DTJNR-35060-225	0	110	35	60	-6°	-6°	0.98	
22	PSC50-DTJNL-35060-225	0	110	35	60	-6°	-6°	0.98	
22	PSC63-DTJNR-45065-226	3	110	45	65	-6°	-6°	1.4	
22	PSC63-DTJNL-45065-226	3	110	45	65	-6°	-6°	1.4	

see next page →

Specifications and dimensions are for reference only and subject to change without notice. Please confirm the latest specifications before ordering.

DTJNR/L-Kr 93°

› Main spare parts

PSC size	Insert	Shim screw	Shim	Key	Complete clamp set
PSC32	16	ILD3072	322.316.01	242.090.404	12.028.011
PSC40-PSC63	16	ILD3072	322.315.02	242.090.404	12.028.011
PSC40-PSC63	22	ILD4085	322.315.04	245.150.104	12.028.021

The insert need to be ordered seperately. Other accessories are included in the order

The sapare parts can be ordered separately. Please inquire on demand

Specifications and dimensions are for reference only and subject to change without notice. Please confirm the latest specifications before ordering.

mongtec-tools.com

DRSNR/L

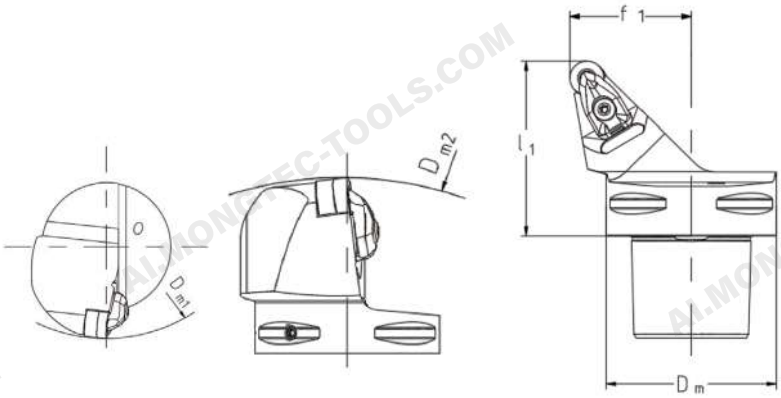

RNMG RNGA
The insert is for illustration only

› Technical parameters

Unit：mm

55°	Ordering code	Dm	Dmin	f1	l1	γ	λ	m (kg)	ISO insert
12	PSC40-DRSNR-27050-12	40	110	27	50	-6°	-6°	0.38	RN..1204..
12	PSC40-DRSNL-27050-12	40	110	27	50	-6°	-6°	0.38	
12	PSC50-DRSNR-35060-12	50	110	35	60	-6°	-6°	0.70	
12	PSC50-DRSNL-35060-12	50	110	35	60	-6°	-6°	0.70	
12	PSC63-DRSNR-45065-12	63	110	45	65	-6°	-6°	1.11	
12	PSC63-DRSNL-45065-12	63	110	45	65	-6°	-6°	1.11	

› Main spare parts

PSC size	Insert	Shim screw	Shim	Key	Complete clamp set
PSC40-PSC63	12	ILD4085	322.155.02	248.150.104	12.028.021

The insert need to be ordered seperately. Other accessories are included in the order
The sapare parts can be ordered separately. Please inquire on demand

Specifications and dimensions are for reference only and subject to change without notice. Please confirm the latest specifications before ordering.

PCLNR/L-Kr 95°

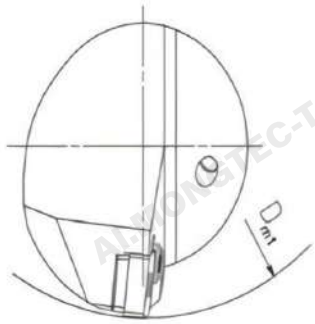

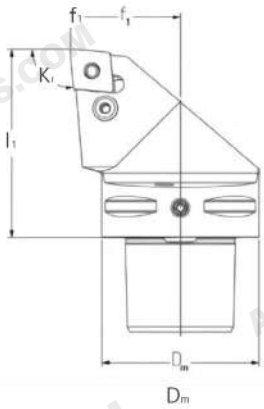

CNMM CNMG CNMA CNGA
The insert is for illustration only

› Technical parameters

Unit：mm

80°	Ordering code	Dm	f1	l1	γ	λ	m (kg)I	SO insert
12	PSC40-PCLNR-27050-12	40	27	50	-6°	-6°	0.36	CN.. 1204..
12	PSC40-PCLNL-27050-12	40	27	50	-6°	-6°	0.36	
12	PSC50-PCLNR-35060-12	50	35	60	-6°	-6°	0.68	
12	PSC50-PCLNL-35060-12	50	35	60	-6°	-6°	0.68	
12	PSC63-PCLNR-45165-12	63	45	165	-6°	-6°	3.7	
12	PSC63-PCLNL-45165-12	63	45	165	-6°	-6°	3.7	
12	PSC63-PCLNR-45065-12	63	45	65	-6°	-6°	1.19	
12	PSC63-PCLNL-45065-12	63	45	65	-6°	-6°	1.19	
12	PSC80-PCLNR-55080-12	80	55	80	-6°	-6°	2.39	
12	PSC80-PCLNL-55080-12	80	55	80	-6°	-6°	2.39	
16	PSC40-PCLNR-27050-16	40	27	50	-6°	-6°	0.35	CN.. 1606..
16	PSC40-PCLNL-27050-16	40	27	50	-6°	-6°	0.35	
16	PSC50-PCLNR-35060-16	50	35	60	-6°	-6°	0.68	
16	PSC50-PCLNL-35060-16	50	35	60	-6°	-6°	0.68	
16	PSC63-PCLNR-45065-16	63	45	65	-6°	-6°	1.19	
16	PSC63-PCLNL-45065-16	63	45	65	-6°	-6°	1.19	
16	PSC80-PCLNL-55080-16	80	55	80	-6°	-6°	2.39	
16	PSC80-PCLNL-55080-16	80	55	80	-6°	-6°	2.39	

see next page →

Specifications and dimensions are for reference only and subject to change without notice. Please confirm the latest specifications before ordering.

PCLNR/L-Kr 95°

› Technical parameters

Unit：mm

80°	Ordering code	Dm	f1	l1	γ	λ	m (kg)	ISO insert
19	PSC50-PCLNR-35060-19	50	35	60	-6°	-6°	0.68	CN.. 1906..
19	PSC50-PCLNL-35060-19	50	35	60	-6°	-6°	0.68	
19	PSC63-PCLNR-45065-19	63	45	65	-6°	-6°	1.19	
19	PSC63-PCLNL-45065-19	63	45	65	-6°	-6°	1.19	
19	PSC80-PCLNR-55080-19	80	55	80	-6°	-6°	2.39	
19	PSC80-PCLNL-55080-19	80	55	80	-6°	-6°	2.39	
19	PSC100-PCLNR-68110-19	100	68	110	-6°	-6°	6.6	
19	PSC100-PCLNL-68110-19	100	68	110	-6°	-6°	6.6	

› Main spare parts

PSC size	Insert	screw	Shim	Key	Lever
PSC40-PSC80	12	414.438.21	322.318.50	241.030.63	413.438.41
PSC40-PSC80	16	414.838.31	322.318.52	241.030.63	413.838.40
PSC50-PSC100	19	414.438.22	322.318.51	241.040.70	413.438.42

The insert need to be ordered seperately. Other accessories are included in the order

The sapare parts can be ordered separately. Please inquire on demand

Specifications and dimensions are for reference only and subject to change without notice. Please confirm the latest specifications before ordering.

PCLNR/L-Kr 95(° HP) PCMNN-Kr 50(° HP)

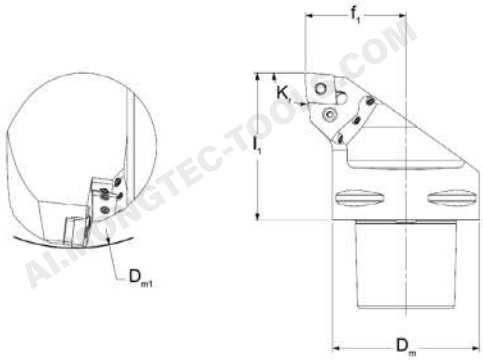

CNMM CNMG CNMA CNGA
The insert is for illustration only

› Technical parameters

Unit：mm

80°	Ordering code	Dm	f1	l1	γ	λ	m (kg)	ISO insert
12	PSC40-PCMNN-00095-12HP	40	09	5	-6°	-6°	0.76	CN.. 1204..
12	PSC50-PCMNN-00115-12HP	50	0	115	-6°	-6°	1.38	
12	PSC63-PCMNN-00115-12HP	63	0	115	-6°	-6°	1.98	
12	PSC80-PCMNN-00150-12HP	80	0	115	-6°	-6°	4.14	
12	PSC100-PCMNN-00110-19HP	100	0	110	-6°	-6°	5.78	CN.. 1906..
12	PSC40-PCLNR-27050-12HP	40	27	50	-6°	-6°	0.47	CN.. 1204..
12	PSC40-PCLNL-27050-12HP	40	27	50	-6°	-6°	0.47	
12	PSC50-PCLNR-35060-12HP	50	35	60	-6°	-6°	0.79	
12	PSC50-PCLNL-35060-12HP	50	35	60	-6°	-6°	0.79	
12	PSC63-PCLNR-45165-12HP	63	45	165	-6°	-6°	3.7	
12	PSC63-PCLNL-45165-12HP	63	45	165	-6°	-6°	3.7	
12	PSC63-PCLNR-45065-12HP	63	45	65	-6°	-6°	1.36	
12	PSC63-PCLNL-45065-12HP	63	45	65	-6°	-6°	1.36	
12	PSC80-PCLNR-55080-12HP	80	55	80	-6°	-6°	2.67	
12	PSC80-PCLNL-55080-12HP	80	55	80	-6°	-6°	2.67	

see next page →

Specifications and dimensions are for reference only and subject to change without notice. Please confirm the latest specifications before ordering.

PCLNR/L-Kr 95(° HP) PCMNN-Kr 50(° HP)

› Technical parameters

Unit：mm

80°	Ordering code	Dm	f1	l1	γ	λ	m (kg)	ISO insert
16	PSC50-PCLNR-35060-16HP	50	35	60	-6°	-6°	0.85	CN.. 1606..
16	PSC50-PCLNL-35060-16HP	50	35	60	-6°	-6°	0.85	
16	PSC63-PCLNR-45065-16HP	63	45	65	-6°	-6°	1.36	
16	PSC63-PCLNL-45065-16HP	63	45	65	-6°	-6°	1.36	
16	PSC80-PCLNR-55080-16HP	80	55	80	-6°	-6°	2.72	
16	PSC80-PCLNL-55080-16HP	80	55	80	-6°	-6°	2.72	
19	PSC63-PCLNR-45065-19HP	63	45	65	-6°	-6°	1.38	CN.. 1906..
19	PSC63-PCLNL-45065-19HP	63	45	65	-6°	-6°	1.38	
19	PSC80-PCLNR-55080-19HP	80	55	80	-6°	-6°	2.69	
19	PSC80-PCLNL-55080-19HP	80	55	80	-6°	-6°	2.69	
19	PSC100-PCLNR-68110-19HP	100	68	110	-6°	-6°	6.6	
19	PSC100-PCLNL-68110-19HP	100	68	110	-6°	-6°	6.6	

› Main spare parts

PSC size	Insert	screw	Shim	Key	Lever	Nozzle
PSC40-PSC80	12	414.438.21	322.318.50	241.030.63	413.438.41	691.026.03
PSC40-PSC80	16	414.838.31	322.318.52	241.030.63	413.838.40	691.026.03
PSC50-PSC80	19	414.438.22	322.318.51	241.040.70	413.438.42	691.026.03

The insert need to be ordered seperately. Other accessories are included in the order

The sapare parts can be ordered separately. Please inquire on demand

Specifications and dimensions are for reference only and subject to change without notice. Please confirm the latest specifications before ordering.

PCRNR/L-Kr 75(° HP)

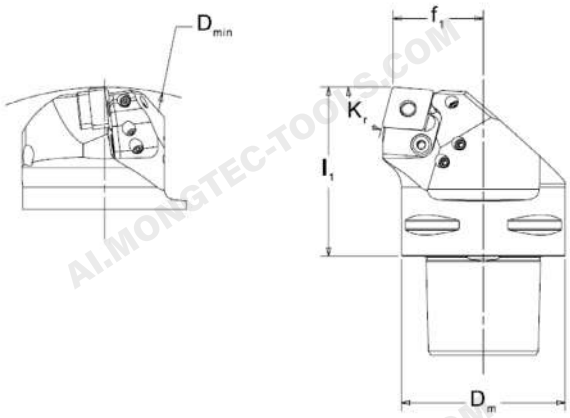

SNMM SNMG SNMA SNGA
The insert is for illustration only

› Technical parameters

Unit：mm

55°	Ordering code	Dm	Dmin	f1	l1	γ	λ	m (kg)	ISO insert
16	PSC63-PCRNR-35065-16HP	63	190	35	65	-6°	-6°	1.50	CN.. 1606..
16	PSC63-PCRNL-35065-16HP	63	190	35	65	-6°	-6°	1.50	
19	PSC63-PCRNR-35065-19HP	63	190	35	65	-6°	-6°	1.48	CN.. 1906..
19	PSC63-PCRNL-35065-19HP	63	190	35	65	-6°	-6°	1.48	

› Main spare parts

PSC size	Insert	screw	Shim	Key	Lever	Nozzle
PSC63	16	413.838.40	414..838.31	322.318.52	241.030.63	691.026.03
PSC63	19	413.438.42	414.438.22	322.318.51	241.040.70	691.026.03

The insert need to be ordered seperately. Other accessories are included in the order
The sapare parts can be ordered separately. Please inquire on demand

Specifications and dimensions are for reference only and subject to change without notice. Please confirm the latest specifications before ordering.

PDJNR/L-Kr 93° PDUNR/L-Kr 93°

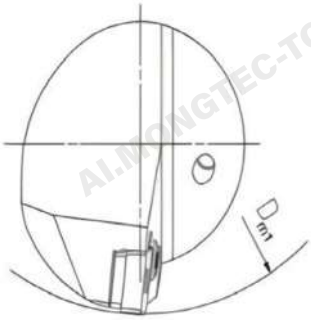

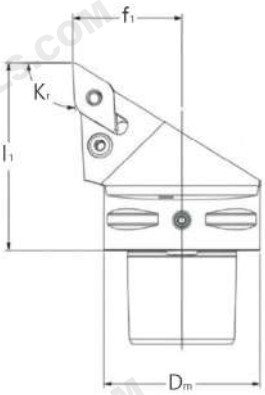

DNMM DNMX DNMG DNMA DNGA
The insert is for illustration only

› Technical parameters

Unit：mm

55°	Ordering code	Dm	f1	l1	γ	λ	m (kg)	ISO insert
11	PSC40-PDJNR-27050-11	40	27	50	-6°	-7°	0.47	DN..1104..
11	PSC40-PDJNL-27050-11	40	27	50	-6°	-7°	0.47	
11	PSC50-PDJNR-35060-11	50	35	60	-6°	-7°	0.79	
11	PSC50-PDJNL-35060-11	50	35	60	-6°	-7°	0.79	
15	PSC40-PDJNR-27055-15	40	27	55	-6°	-7°	0.36	DN..1506..
15	PSC40-PDJNL-27055-15	40	27	55	-6°	-7°	0.36	
15	PSC50-PDJNR-35060-15	50	35	60	-6°	-7°	0.62	
15	PSC50-PDJNL-35060-15	50	35	60	-6°	-7°	0.62	
15	PSC63-PDJNR-45065-15	63	45	65	-6°	-7°	1.05	
15	PSC63-PDJNL-45065-15	63	45	65	-6°	-7°	1.05	
15	PSC80-PDJNR-55080-15	80	55	80	-6°	-7°	2.74	
15	PSC80-PDJNL-55080-15	80	55	80	-6°	-7°	2.74	
15	PSC100-PDJNR-68110-15	100	68	110	-6°	-7°	6.05	
15	PSC100-PDJNL-68110-15	100	68	110	-6°	-7°	6.05	

see next page →

Specifications and dimensions are for reference only and subject to change without notice. Please confirm the latest specifications before ordering.

PDJNR/L-Kr 93° PDUNR/L-Kr 93°

› Technical parameters

Unit：mm

55°	Ordering code	Dm	f1	l1	γ	λ	m (kg)	ISO insert
15	PSC63-PDUNR-45065-15	63	45	65	-6°	-7°	1.31	DN..1506..
15	PSC63-PDUNL-45065-15	63	45	65	-6°	-7°	1.31	
15	PSC80-PDUNR-55080-15	80	55	80	-6°	-7°	2.77	
15	PSC80-PDUNL-55080-15	80	55	80	-6°	-7°	2.77	

› Main spare parts

PSC size	Insert	screw	Shim	Key	Lever
PSC40-PSC50	11	414.438.20	322.255.01	241.025.56	413.001.01
PSC40-PSC100	15	414.438.30	322.358.51	241.030.63	413.438.47

The insert need to be ordered seperately. Other accessories are included in the order

The sapare parts can be ordered separately. Please inquire on demand

Specifications and dimensions are for reference only and subject to change without notice. Please confirm the latest specifications before ordering.

PDJNR/L-Kr 93(° HP) PDUNR/L-Kr 93(° HP)

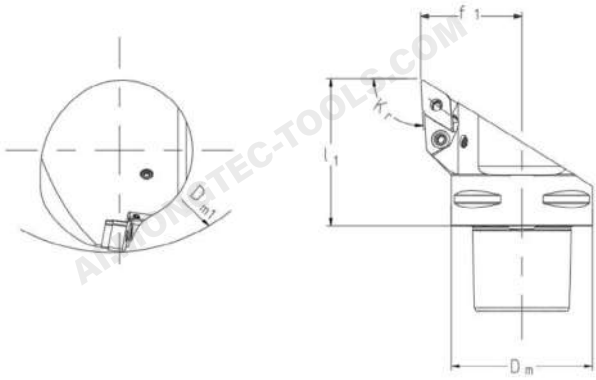

DNMM DNMX DNMG DNMA DNGA
The insert is for illustration only

› Technical parameters

Unit : mm

80°	Ordering code	Dm	f1	l1	γ	λ	m (kg)	ISO insert
11	PSC40-PDJNR-27050-11HP	40	27	50	-6°	-7°	0.44	DN..1104..
11	PSC40-PDJNL-27050-11HP	40	27	50	-6°	-7°	0.44	
11	PSC50-PDJNR-35060-11HP	50	35	60	-6°	-7°	0.79	
11	PSC50-PDJNL-35060-11HP	50	35	60	-6°	-7°	0.79	
15	PSC40-PDJNR-27055-15HP	40	27	55	-6°	-7°	0.48	DN..1506..
15	PSC40-PDJNL-27055-15HP	40	27	55	-6°	-7°	0.48	
15	PSC50-PDJNR-35060-15HP	50	35	60	-6°	-7°	0.79	
15	PSC50-PDJNL-35060-15HP	50	35	60	-6°	-7°	0.79	
15	PSC63-PDJNR-45065-15HP	63	45	65	-6°	-7°	1.31	
15	PSC63-PDJNL-45065-15HP	63	45	65	-6°	-7°	1.31	
15	PSC80-PDJNR-55080-15HP	80	55	80	-6°	-7°	2.74	
15	PSC80-PDJNL-55080-15HP	80	55	80	-6°	-7°	2.74	
15	PSC100-PDJNR-68110-15HP	100	68	110	-6°	-7°	6.05	
15	PSC100-PDJNL-68110-15HP	100	68	110	-6°	-7°	6.05	

see next page →

Specifications and dimensions are for reference only and subject to change without notice. Please confirm the latest specifications before ordering.

PDJNR/L-Kr 93(° HP) PDUNR/L-Kr 93(° HP)

› Technical parameters

Unit：mm

80°	Ordering code	Dm	f1	l1	γ	λ	m (kg)	ISO insert
15	PSC63-PDUNR-45065-15HP	63	45	65	-6°	-7°	1.36	DN..1506..
15	PSC63-PDUNL-45065-15HP	63	45	65	-6°	-7°	1.36	
15	PSC80-PDUNR-55080-15HP	80	55	80	-6°	-7°	2.77	
15	PSC80-PDUNL-55080-15HP	80	55	80	-6°	-7°	2.77	

› Main spare parts

PSC size	Insert	screw	Shim	Key	Lever	Nozzle
PSC40-PSC50	11	414.438.20	322.255.01	241.025.56	413.001.01	691.026.03
PSC40-PSC100	15	414.438.303	22.358.51	241.030.63	413.438.476	91.026.03

The insert need to be ordered seperately. Other accessories are included in the order

The sapare parts can be ordered separately. Please inquire on demand

Specifications and dimensions are for reference only and subject to change without notice. Please confirm the latest specifications before ordering.

PRSCR/L

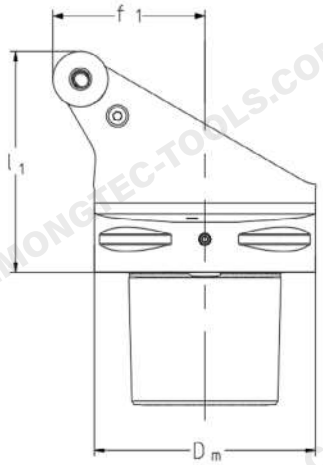

RCMX RCMT

The insert is for illustration only

Technical parameters

Unit：mm

	Ordering code	Dm	f1	l1	γ	λ	m (kg)	ISO insert
20	PSC80-PRSCR-55080-20	80	55	80	0°	0°	2.45	RC..2006..
20	PSC80-PRSCL-55080-20	80	55	80	0°	0°	2.45	

Main spare parts

PSC size	Insert	screw	Shim	Key	Lever
PSC80	20	414.438.25	322.398.53	241.030.63	413.639.843

The insert need to be ordered seperately. Other accessories are included in the order

The sapare parts can be ordered separately. Please inquire on demand

Specifications and dimensions are for reference only and subject to change without notice. Please confirm the latest specifications before ordering.

PRSCR/L-C

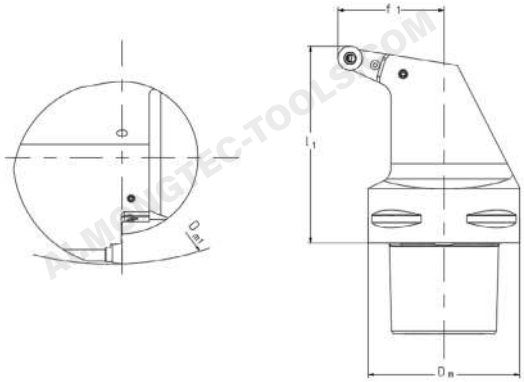

RCMX RCMT
The insert is for illustration only

› Technical parameters

Unit：mm

55°	Ordering code	Dm	Dmin	f1	l1	γ	λ	m (kg)	ISO insert
16	PSC100-PRSCR-70130-16C	1005	00	70	130	0°	0°	6.84	RC..1606..
16	PSC100-PRSCL-70130-16C1	00	5007	0	130	0°	0°	6.84	

› Main spare parts

PSC size	Insert	screw	Shim	Key	Lever	Nozzle
PSC100	16	414.438.33	322.639.852	241.025.56	413.639.842	691.026.03

The insert need to be ordered seperately. Other accessories are included in the order
The sapare parts can be ordered separately. Please inquire on demand

Specifications and dimensions are for reference only and subject to change without notice. Please confirm the latest specifications before ordering.

PSSNR/L-Kr 45(° HP)

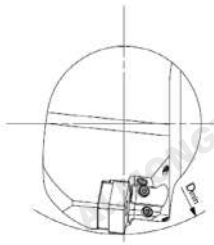

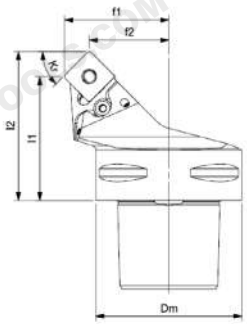

SNMM SNMG SNMA SNGA
The insert is for illustration only

› Technical parameters

Unit：mm

55°	Ordering code	Dm	Dmin	f1	l1	f2	l2	γ	λ	m (kg)	ISO insert
12	PSC40-PSSNR-27042-12HP	40	90	27	42	18.7	50.3	-8°	0°	0.3	SN.. 1204..
12	PSC40-PSSNL-27042-12HP	40	90	27	42	18.7	50.3	-8°	0°	0.3	
12	PSC50-PSSNR-35052-12HP	50	1103	55	22	6.76	0.3	-8°	0°	0.7	
12	PSC50-PSSNL-35052-12HP	50	1103	55	22	6.76	0.3	-8°	0°	0.7	
12	PSC63-PSSNR-45056-12HP	63	1104	55	63	6.76	4.3	-8°	0°	1.1	
12	PSC63-PSSNL-45056-12HP	63	1104	55	63	6.76	4.3	-8°	0°	1.1	
12	PSC80-PSSNR-55080-12HP	80	2005	58	04	6.78	8.3	-8°	0°	2.4	
12	PSC80-PSSNL-55080-12HP	80	2005	58	04	6.78	8.3	-8°	0°	2.4	
15	PSC50-PSSNR-35052-15HP	50	1103	55	0	24.8	60.2	-8°	0°	0.7	SN..1506..
15	PSC50-PSSNL-35052-15HP	50	1103	55	0	24.8	60.2	-8°	0°	0.7	
15	PSC63-PSSNR-45054-15HP	63	1104	55	4	34.8	64.2	-8°	0°	1.1	
15	PSC63-PSSNL-45054-15HP	63	1104	55	4	34.8	64.2	-8°	0°	1.1	

see next page →

Specifications and dimensions are for reference only and subject to change without notice. Please confirm the latest specifications before ordering.

PSSNR/L-Kr 45(° HP)

› Technical parameters

Unit：mm

55°	Ordering code	Dm	Dmin	f1	l1	f2	l2	γ	λ	m (kg)	ISO insert
19	PSC63-PSSNR-45052-19HP	63	110	45	52	32.5	64.5	-8°	0°	1.1	SN.. 1906..
19	PSC63-PSSNL-45052-19HP	63	110	45	52	32.5	64.5	-8°	0°	1.1	
19	PSC80-PSSNR-55080-19HP	80	200	55	80	42.5	92.5	-8°	0°	2.55	
19	PSC80-PSSNL-55080-19HP	80	200	55	80	42.5	92.5	-8°	0°	2.55	
19	PSC100-PSSNR-68092-19HP1	00	260	68	92	55.5	104.5	-8°	0°	4.45	
19	PSC100-PSSNL-68092-19HP	100	260	68	92	55.5	104.5	-8°	0°	4.45	

› Main spare parts

PSC size	Insert	screw	Shim	Key	Lever	Nozzle
PSC40-PSC80	12	414.438.21	322.438.51	241.030.634	13.438.416	91.026.03
PSC50-PSC63	15	414.838.31	322.438.57	241.030.634	13.838.406	91.026.03
PSC63-PSC100	19	414.438.22	322.438.52	241.040.70	413.438.42	691.026.03

The insert need to be ordered seperately. Other accessories are included in the order

The sapare parts can be ordered separately. Please inquire on demand

Specifications and dimensions are for reference only and subject to change without notice. Please confirm the latest specifications before ordering.

PSKNR/L-Kr 75°

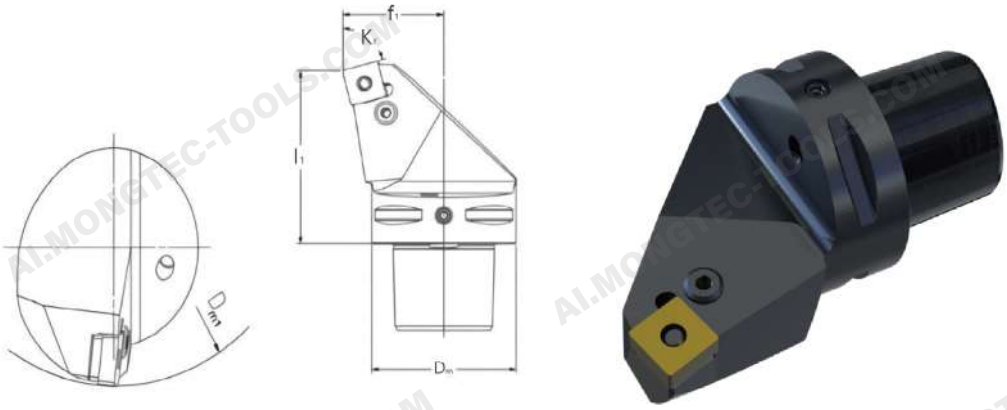

SNMM SNMG SNMA SNGA
The insert is for illustration only

› Technical parameters

Unit：mm

90°	Ordering code	Dm	f1	l1	γ	λ	m (kg)	ISO insert
12	PSC40-PSKNR-27050-12	40	27	50	-6°-	6°	0.34	SN.. 1204..
12	PSC40-PSKNL-27050-124	02	75	0-	6°	-6°0	.34	
12	PSC50-PSKNR-35060-12	50	35	60	-6°-	6°	0.72	
12	PSC50-PSKNL-35060-125	03	56	0-	6°	-6°0	.72	
12	PSC63-PSKNR-45065-12	63	45	65	-6°-	6°	1.15	
12	PSC63-PSKNL-45065-126	34	56	5-	6°	-6°1	.15	

› Main spare parts

PSC size	Insert	Shim screw	Shim	Key	Lever
PSC40-PSC631	2	414.438.21	322.438.51	241.030.634	13.438.41

The insert need to be ordered seperately. Other accessories are included in the order
The sapare parts can be ordered separately. Please inquire on demand

Specifications and dimensions are for reference only and subject to change without notice. Please confirm the latest specifications before ordering.

PSKNR/L-Kr 75(° HP) PSDNN-Kr 45(° HP) PSRNR/L-Kr 75(° HP)

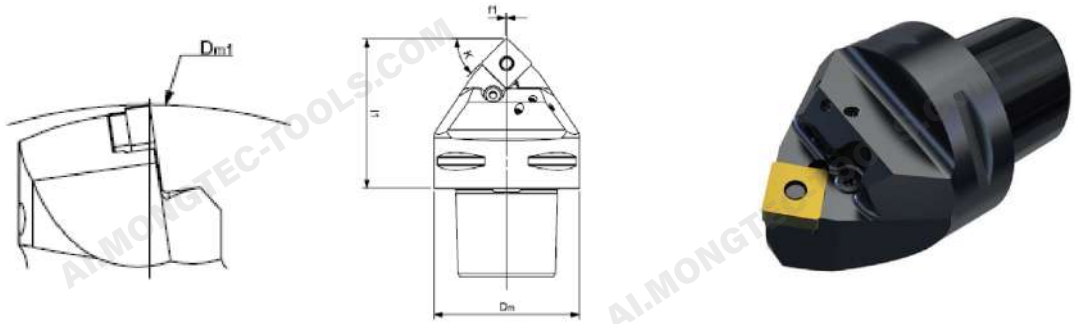

SNMM SNMG SNMA SNGA
The insert is for illustration only

› Technical parameters

Unit：mm

80°	Ordering code	Dm	f1	l1	γ	λ	m (kg)	ISO insert
15	PSC63-PSDNN-00065-15HP	63	0.56	5	-6°	-6°	1.29	SN..1506..
19	PSC63-PSDNN-00065-19HP	63	0.56	5	-6°	-6°	1.29	SN..1906..
15	PSC63-PSKNR-45065-15HP	63	45	65	-6°	-6°	1.52	SN..1506..
15	PSC63-PSKNL-45065-15HP	63	45	65	-6°	-6°1	.52	
19	PSC63-PSKNR-45065-19HP	63	45	65	-6°-	6°	1.6	SN..1906..
19	PSC63-PSKNL-45065-19HP	63	45	65	-6°-	6°	1.6	
15	PSC63-PSRNR-35065-15HP	63	35	65	-6°-	6°	1.48	SN..1506..
15	PSC63-PSRNL-35065-15HP	63	35	65	-6°	-6°	1.48	
19	PSC63-PSRNR-35065-19HP	63	35	65	-6°	-6°	1.47	SN..1906..
19	PSC63-PSRNL-35065-19HP	63	35	65	-6°	-6°	1.47	

› Main spare parts

PSC size	Insert	screw	Shim	Key	Lever	Nozzle
PSC63	16	414.838.31	322.438.57	241.030.63	413.838.406	91.026.03
PSC63	19	414.438.42	322.438.52	241.040.70	413.438.426	91.026.03

The insert need to be ordered seperately. Other accessories are included in the order
The sapare parts can be ordered separately. Please inquire on demand

Specifications and dimensions are for reference only and subject to change without notice. Please confirm the latest specifications before ordering.

SCLCR/L-Kr 95°

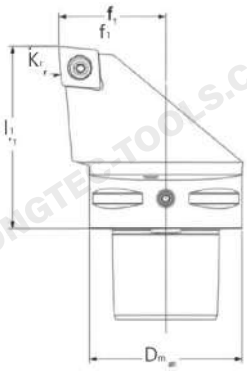

CCMT CCGT CCGX CCET CCMW
The insert is for illustration only

› Technical parameters

Unit：mm

80°	Ordering code	Dm	f1	l1	γ	λ	m (kg)	ISO insert
09	PSC32-SCLCR-22040-09	32	22	40	0°	0°	0.24	CC..09T3..
09	PSC32-SCLCL-22040-09	32	22	40	0°	0°	0.24	
09	PSC40-SCLCR-27050-09	40	27	50	0°	0°	0.43	
09	PSC40-SCLCL-27050-09	40	27	50	0°	0°	0.43	
09	PSC50-SCLCR-35060-09	50	35	60	0°	0°	0.87	
09	PSC50-SCLCL-35060-09	50	35	60	0°	0°	0.87	
09	PSC63-SCLCR-45065-09	63	45	65	0°	0°	1.5	
09	PSC63-SCLCL-45065-09	63	45	65	0°	0°	1.5	
12	PSC32-SCLCR-22040-12	32	22	40	0°	0°	0.2	CC..1204..
12	PSC32-SCLCL-22040-12	32	22	40	0°	0°	0.2	
12	PSC40-SCLCR-27050-12	40	27	50	0°	0°	0.44	
12	PSC40-SCLCL-27050-12	40	27	50	0°	0°	0.44	
12	PSC50-SCLCR-35060-12	50	35	60	0°	0°	0.77	
12	PSC50-SCLCL-35060-12	50	35	60	0°	0°	0.77	
12	PSC63-SCLCR-45065-12	63	45	65	0°	0°	1.34	
12	PSC63-SCLCL-45065-12	63	45	65	0°	0°	1.34	

see next page →

Specifications and dimensions are for reference only and subject to change without notice. Please confirm the latest specifications before ordering.

SCLCR/L-Kr 95°

› Main spare parts

PSC size	Insert	Shim screw	Shim	Key	Insert screw
PSC32-PSC63	09	512.090.01	322 232.01	241.035.65&248.150.10I	LD3512
PSC32-PSC63	12	512.090.03	322.232.02	241.040.70&248.150.10I	LD4014

The insert need to be ordered seperately. Other accessories are included in the order

The sapare parts can be ordered separately. Please inquire on demand

Specifications and dimensions are for reference only and subject to change without notice. Please confirm the latest specifications before ordering.

SDJCR/L-Kr 93° SDNCN-Kr 62.5°

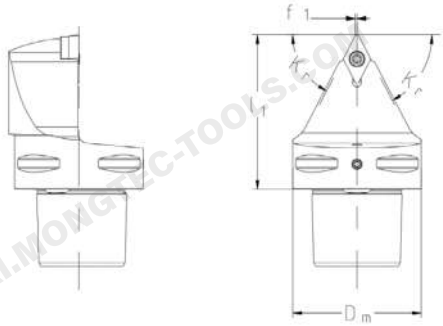

DCMT DCMX DCGT DCGX DCET DCMW
The insert is for illustration only

› Technical parameters

Unit：mm

55°	Ordering code	Dm	f1	l1	γ	λ	m (kg)	ISO insert
07	PSC32-SDJCR-22040-07	32	22	40	0°	0°	0.21	DC..0702..
07	PSC40-SDJCR-27050-07	40	27	50	0°	0°	0.26	
11	PSC32-SDJCR-22040-11	32	22	40	0°	0°	0.16	DC..11T3..
11	PSC32-SDJCL-22040-11	32	22	40	0°	0°	0.16	
11	PSC40-SDJCR-27050-11	40	27	50	0°	0°	0.33	
11	PSC40-SDJCL-27050-11	40	27	50	0°	0°	0.33	
11	PSC50-SDJCR-35060-11	50	35	60	0°	0°	0.63	
11	PSC50-SDJCL-35060-11	50	35	60	0°	0°	0.63	
11	PSC63-SDJCR-45065-11	63	45	65	0°	0°	1.05	
11	PSC63-SDJCL-45065-11	63	45	65	0°	0°	1.05	
11	PSC32-SDNCN-00040-11	32	0.5	40	0°	0°	0.2	
11	PSC40-SDNCN-00050-11	40	0.5	50	0°	0°	0.38	
11	PSC50-SDNCN-00060-11	50	0.5	60	0°	0°	0.66	

› Main spare parts

PSC size	Insert	Shim screw	Shim	Key	Insert screw
PSC32-PSC40	07	--		242.070.35	ILD2565
PSC32-PSC63	11	512.090.01	322.263.01	241.035.65&248.150.10	ILD3512

The insert need to be ordered seperately. Other accessories are included in the order

The sapare parts can be ordered separately. Please inquire on demand

Specifications and dimensions are for reference only and subject to change without notice. Please confirm the latest specifications before ordering.

SVHBR/L-Kr 107.5° SVJBR/L-Kr 93° SVMBR/L-Kr 95°

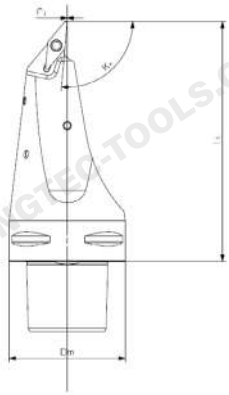

VBMT VBGT VCGX VCEX VCGT VCET VBMW VCMW
The insert is for illustration only

› Technical parameters

Unit：mm

35°	Ordering code	Dm	f1	l1	γ	λ	m (kg)	ISO insert
11	PSC32-SVHBR-22040-11	32	22	40	0°	0°	0.2	
11	PSC32-SVHBL-22040-11	32	22	40	0°	0°	0.2	
11	PSC40-SVHBR-27050-11	40	27	50	0°	0°	0.3	VB..1102..
11	PSC40-SVHBL-27050-11	40	27	50	0°	0°	0.3	VC..1102..
11	PSC50-SVHBR-35060-11	50	35	60	0°	0°	0.74	
11	PSC50-SVHBL-35060-11	50	35	60	0°	0°	0.74	
16	PSC40-SVHBR-27050-16	40	27	50	0°	0°	0.38	
16	PSC40-SVHBL-27050-16	40	27	50	0°	0°	0.38	
16	PSC50-SVHBR-35060-16	50	35	60	0°	0°	0.64	VB..1604..
16	PSC50-SVHBL-35060-16	50	35	60	0°	0°	0.64	VC..1604..
16	PSC63-SVHBR-45065-16	63	45	65	0°	0°	1.12	
16	PSC63-SVHBL-45065-16	63	45	65	0°	0°	1.12	
11	PSC32-SVJBR-22040-11	32	22	40	0°	0°	0.19	
11	PSC32-SVJBL-22040-11	32	22	40	0°	0°	0.19	
11	PSC40-SVJBR-27050-11	40	27	50	0°	0°	0.35	VB..1102..
11	PSC40-SVJBL-27050-11	40	27	50	0°	0°	0.35	VC..1102..
11	PSC50-SVJBR-35060-11	50	35	60	0°	0°	0.74	
11	PSC50-SVJBL-35060-11	50	35	60	0°	0°	0.74	

see next page →

Specifications and dimensions are for reference only and subject to change without notice. Please confirm the latest specifications before ordering.

SVHBR/L-Kr 107.5° SVJBR/L-Kr 93° SVMBR/L-Kr 95°

› Technical parameters

Unit：mm

35°	Ordering code	Dm	f1	l1	γ	λ	m (kg)	ISO insert
16	PSC40-SVJBR-27050-16	40	27	50	0°	0°	0.35	
16	PSC40-SVJBL-27050-16	40	27	50	0°	0°	0.35	
16	PSC50-SVJBR-35060-16	50	35	60	0°	0°	0.7	"VB..1604..
16	PSC50-SVJBL-35060-16	50	35	60	0°	0°	0.7	VC..1604.."
16	PSC63-SVJBR-45065-16	63	45	65	0°	0°	1.11	
16	PSC63-SVJBL-45065-16	63	45	65	0°	0°	1.11	
16	PSC40-SVVBN-00050-16	40	0.6	50	0°	0°	0.29	
16	PSC50-SVVBN-00060-16	50	0.6	60	0°	0°	0.56	"VB..1604..
16	PSC63-SVVBN-00065-16	63	0.6	65	0°	0°	0.97	VC..1604.."
16	PSC50-SVMBL-00115-16	50	1.2	115	0°	0°	1	
16	PSC63-SVMBL-00130-16	63	1.2	130	0°	0°	1.77	"VB..1604..
16	PSC63-SVMBR-00130-16HP	63	1.2	130	0°	0°	1.96	VC..1604.."
16	PSC63-SVMBL-00130-16HP	63	1.2	130	0°	0°	1.96	

› Main spare parts

PSC size	Insert	Shim screw	Shim	Key	Insert screw	Nozzle
PSC32-PSC50	11	--		242.070.35	ILD2565	-
PSC32-PSC63	16	512.090.01	322.270.01	248.150.10 & 241.035.65	ILD3512	691.029.03

The insert need to be ordered seperately. Other accessories are included in the order

The sapare parts can be ordered separately. Please inquire on demand

Specifications and dimensions are for reference only and subject to change without notice. Please confirm the latest specifications before ordering.

SVUBR/L-Kr 93°

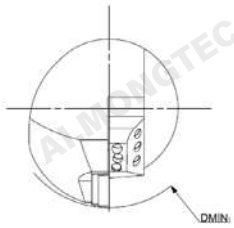

VBMT VBGT VCGX VCEX VCGT VCET VBMW VCMW
The insert is for illustration only

› Technical parameters

Unit：mm

55°	Ordering code	Dm	Dmin	f1	l1	γ	λ	m (kg)	ISO insert
16	PSC63-SVUBR-45065-16HP	63	85	45	65	0°	0°	1.41	VB..1604.. VC..1604..
16	PSC63-SVUBL-45065-16HP	63	85	45	65	0°	0°	1.41	
16	PSC80-SVUBR-55080-16HP	80	100	55	80	0°	0°	2.79	
16	PSC80-SVUBL-55080-16HP	80	100	55	80	0°	0°	2.79	

› Main spare parts

PSC size	Insert	Shim screw	Shim	Key	Insert screw	Nozzle
PSC63-PSC80	16	512.090.01	322.270.01	248.150.10 & 241.035.65	ILD3512	691.026.03

The insert need to be ordered seperately. Other accessories are included in the order
The sapare parts can be ordered separately. Please inquire on demand

Specifications and dimensions are for reference only and subject to change without notice. Please confirm the latest specifications before ordering.

SRDCN SRSCR/L

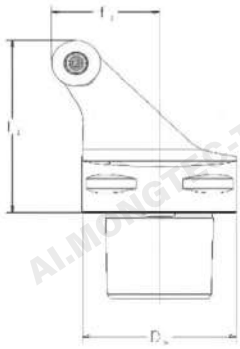

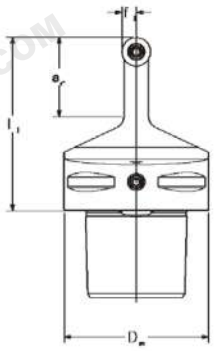

RCMT RCGX-AL

The insert is for illustration only

› Technical parameters

Unit：mm

	Ordering code	Dm	ar	f1	l1	γ	λ	m (kg)	ISO insert
10	PSC32-SRDCN-00040-10A	32	20	54	00	°0	°0	.13	RC.10T3M0
10	PSC40-SRDCN-00050-10A	40	25	55	00	°0	°	0.27	
10	PSC50-SRDCN-00060-10A	50	25	56	00	°0	°	0.51	
10	PSC63-SRDCN-00065-10A	63	25	56	50	°0	°0	.91	
06	PSC32-SRSCR-22040-06	32	-2	24	00	°0	°0	.15	RC.0602M0
06	PSC32-SRSCL-22040-06	32	-2	24	00	°0	°0	.15	
06	PSC40-SRSCR-27050-06	40	-2	75	00	°0	°	0.4	
06	PSC40-SRSCL-27050-06	40	-2	75	00	°0	°	0.4	
06	PSC50-SRSCR-35060-06	50	-3	56	00	°0	°0	.72	
06	PSC50-SRSCL-35060-06	50	-3	56	00	°0	°0	.72	
08	PSC32-SRSCR-22040-08	32	-2	24	00	°0	°0	.15	RC.0803M0
08	PSC32-SRSCL-22040-08	32	-2	24	00	°0	°0	.15	
08	PSC40-SRSCR-27050-08	40	-2	75	00	°0	°	0.36	
08	PSC40-SRSCL-27050-08	40	-2	75	00	°0	°	0.36	
08	PSC50-SRSCR-35060-08	50	-3	56	00	°0	°0	.7	
08	PSC50-SRSCL-35060-08	50	-3	56	00	°0	°0	.7	
10	PSC32-SRSCR-22040-103	2-		22	40	0°	0°	0.22	RC.10T3M0
10	PSC32-SRSCL-22040-103	2-		22	40	0°	0°	0.22	
10	PSC40-SRSCR-27050-104	0-		27	50	0°	0°	0.41	
10	PSC40-SRSCL-27050-104	0-		27	50	0°	0°	0.41	

see next page →

Specifications and dimensions are for reference only and subject to change without notice. Please confirm the latest specifications before ordering.

SRDCN SRSCR/L

› Technical parameters

Unit：mm

	Ordering code	Dm	ar	f1	l1	γ	λ	m (kg)	ISO insert
10	PSC50-SRSCR-35060-10	50	-3	56	00	°	0°	0.75	RC.10T3M0
10	PSC50-SRSCL-35060-10	50	-3	56	00	°	0°	0.75	
10	PSC63-SRSCR-45065-10	63	-4	56	50	°	0°	1.2	
10	PSC63-SRSCL-45065-10	63	-4	56	50	°	0°	1.2	
12	PSC40-SRSCR-27050-12	40	-2	75	00	°	0°	0.4	RC.1204M0
12	PSC40-SRSCL-27050-12	40	-2	75	00	°	0°	0.4	
12	PSC50-SRSCR-35060-12	50	-3	56	00	°	0°	0.75	
12	PSC50-SRSCL-35060-12	50	-3	56	00	°	0°	0.75	
12	PSC63-SRSCR-45065-12	63	-4	56	50	°	0°	1.24	
12	PSC63-SRSCL-45065-12	63	-4	56	50	°	0°	1.24	
16	PSC50-SRSCR-35060-16	50	-3	56	00	°	0°	0.56	RC.1606M0
16	PSC50-SRSCL-35060-16	50	-3	56	00	°	0°	0.56	
16	PSC63-SRSCR-45065-16	63	-4	56	50	°	0°	1.03	
16	PSC63-SRSCL-45065-16	63	-4	56	50	°	0°	1.03	
20	PSC50-SRSCR-35060-20	50	-3	56	00	°	0°	0.86	RC.2006M0
20	PSC50-SRSCL-35060-20	50	-3	56	00	°	0°	0.86	
20	PSC63-SRSCR-45065-20	63	-4	56	50	°	0°	1.31	
20	PSC63-SRSCL-45065-20	63	-4	56	50	°	0°	1.31	

› Main spare parts

PSC size	Insert	Shim screw	Shim	Key	Insert screw
PSC32-PSC50	06	--		242.070.35	ILD2565
PSC32-PSC50	08	--		242.090.40	ILD3072
PSC32-PSC63	10	512.090.01	300.110.01	248.150.10&241.035.65	ILD3510
PSC40-PSC63	12	512.090.01	322.110.02	248.150.10&241.035.65	ILD3512
PSC50-PSC63	16	512.090.06	322.110.03	248.200.10&241.050.80	ILD5017
PSC50-PSC63	20	512.090.08	322.110.04	245.250.10&241.060.90	ILD6018

The insert need to be ordered seperately. Other accessories are included in the order

The sapare parts can be ordered separately. Please inquire on demand

Specifications and dimensions are for reference only and subject to change without notice. Please confirm the latest specifications before ordering.

SRSCR/L(HP)

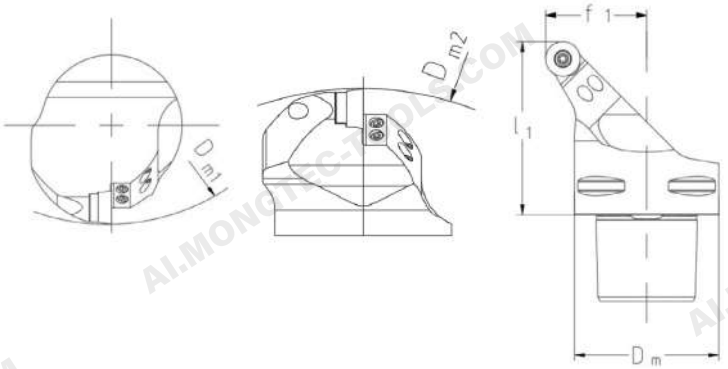

RCMT RCGX-AL
The insert is for illustration only

› Technical parameters

Unit：mm

55°	Ordering code	Dm	Dminf	1l	1	γ	λ	m (kg)	ISO insert
10	PSC50-SRSCR-35060-10HP	50	130	35	60	0°	0°	0.70	RC..10T3M0
10	PSC50-SRSCL-35060-10HP5	0	130	35	60	0°	0°	0.70	
12	PSC50-SRSCR-35060-12HP	50	130	35	60	0°	0°	0.70	RCMT 12 04 MO
12	PSC50-SRSCL-35060-12HP5	0	130	35	60	0°	0°	0.70	

› Main spare parts

PSC size	Insert	Shim screw	Shim	Key	Insert screw	Nozzle
PSC50	10	512.090.01	322.110.01	248.150.10 & 251.035.65	ILD3510	691.026.03
PSC50-PSC63	12	512.090.01	322.110.02	248.150.10 & 251.035.65	ILD3510	691.026.03

The insert need to be ordered seperately. Other accessories are included in the order
The sapare parts can be ordered separately. Please inquire on demand

Specifications and dimensions are for reference only and subject to change without notice. Please confirm the latest specifications before ordering.

DCLNR/L-Kr 95°

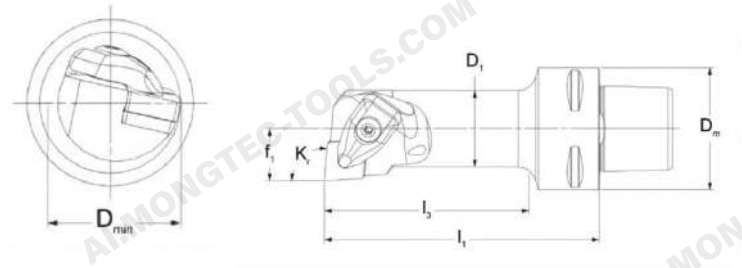

CNMM CNMG CNMA CNGA
The insert is for illustration only

› Technical parameters

Unit：mm

80°	Ordering code	Dm	Dmin	D1	f1	l1	l3	γ	λ	m (kg)	ISO insert
12P	SC40-DCLNR-17090-124	03	22	51	79	06	9	-6°	-12°	0.47	CN.. 1204..
12P	SC40-DCLNL-17090-124	03	22	51	79	06	9	-6°	-12°	0.47	
12P	SC50-DCLNR-17090-125	03	22	51	79	06	7	-6°	-12°	0.65	
12P	SC50-DCLNL-17090-125	03	22	51	79	06	7	-6°	-12°	0.65	
12P	SC63-DCLNR-17100-126	33	22	51	71	00	73	-6°	-12°	1.04	
12	PSC63-DCLNL-17100-126	33	22	51	71	00	73	-6°	-12°	1.04	

› Main spare parts

PSC size	Insert	Shim screw	Shim	Key	Complete clamp set
PSC40-PSC63	12	ILD4085	322.236.03	248.150.104	12.028.021

The insert need to be ordered seperately. Other accessories are included in the order
The sapare parts can be ordered separately. Please inquire on demand

Specifications and dimensions are for reference only and subject to change without notice. Please confirm the latest specifications before ordering.

DDUNR/L-Kr 93°

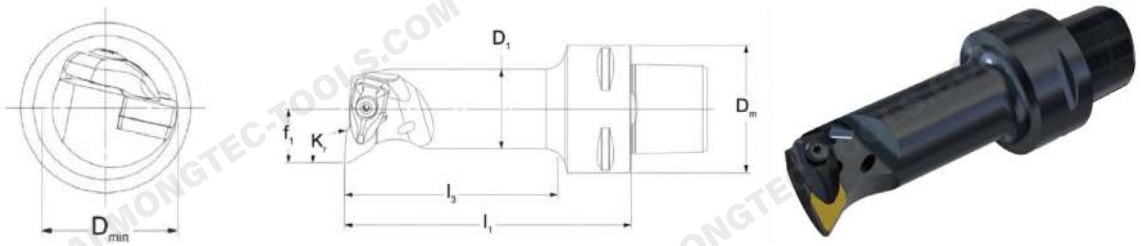

DNMM DNMX DNMG DNMA DNGA

The insert is for illustration only

› Technical parameters

Unit：mm

55°	Ordering code	Dm	Dmin	D1	f1	l1	l3	γ	λ	m (kg)	ISO insert
11	PSC40-DDUNR-17090-11	40	32	25	17	90	68	-6°	-12°	0.47	DN.. 1104..
11	PSC40-DDUNL-17090-11	40	32	25	17	90	68	-6°	-12°	0.47	
11	PSC50-DDUNR-17090-11	50	32	25	17	90	66	-6°	-12°	0.65	
11	PSC50-DDUNL-17090-11	50	32	25	17	90	66	-6°	-12°	0.65	
15	PSC40-DDUNR-27080-15	40	50	39.7	27	80	59	-6°	-11°	1.04	DN.. 1506..
15	PSC40-DDUNL-27080-15	40	50	39.7	27	80	59	-6°	-11°	1.04	
15	PSC50-DDUNR-27140-15	50	50	40	27	140	118	-6°	-11°	1.04	
15	PSC50-DDUNL-27140-15	50	50	40	27	140	118	-6°	-11°	1.04	
15	PSC63-DDUNR-27140-15	63	50	40	27	140	114	-6°	-11°	1.04	
15	PSC63-DDUNL-27140-15	63	50	40	27	140	114	-6°	-11°	1.04	

› Main spare parts

PSC size	Insert	Shim screw	Shim	Key	Complete clamp set
PSC40-PSC50	11	ILD3512	322 267.01	242.090.40	412.028.011
PSC40-PSC63	15	ILD4085	322.266.02	248.150.10	412.028.021

The insert need to be ordered seperately. Other accessories are included in the order

The sapare parts can be ordered separately. Please inquire on demand

Specifications and dimensions are for reference only and subject to change without notice. Please confirm the latest specifications before ordering.

DWLNR/L-Kr 95°

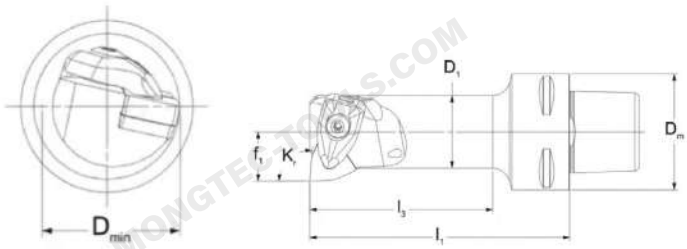

WNMM WNMG WNGA WNMA
The insert is for illustration only

› Technical parameters

Unit：mm

80°	Ordering code	Dm	Dmin	D1	f1	l1	l3	γ	λ	m (kg)	ISO insert
8P	SC40-DWLNR-17090-08	40	32	25	179	06	9	-0°	-6°0	.48	WN.. 0804..
8P	SC40-DWLNL-17090-08	40	32	25	179	06	9	-0°	-6°0	.48	
8P	SC50-DWLNR-17090-08	50	32	25	179	06	9	-0°	-6°0	.67	
8	PSC50-DWLNL-17090-08	50	32	25	179	06	9	-0°	-6°0	.67	

› Main spare parts

PSC size	Insert	Shim screw	Shim	Key	Complete clamp set
PSC40-PSC508		ILD4085	322.328.02	248.150.104	12.028.021

The insert need to be ordered seperately. Other accessories are included in the order
The sapare parts can be ordered separately. Please inquire on demand

Specifications and dimensions are for reference only and subject to change without notice. Please confirm the latest specifications before ordering.

MONGTEC
mongtec-tools.com

PCLNR/L-Kr 95°

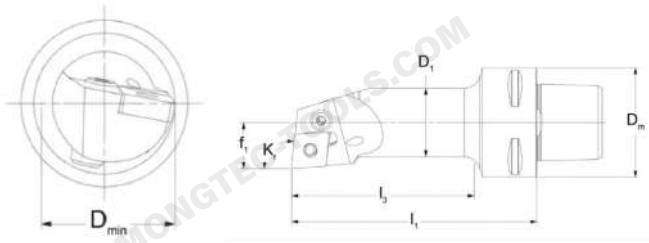

CNMM CNMG CNMA CNGA
The insert is for illustration only

› Technical parameters

Unit：mm

80°	Ordering code	Dm	Dmin	D1	f1	l1	l3	γ	λ	m (kg)	ISO insert
12P	SC32-PCLNR-17090-123	23	22	51	79	07	5-	6°	-11°0	.3	CN.. 1204..
12	PSC32-PCLNL-17090-123	23	22	51	79	07	5-	6°	-11°0	.3	
12	PSC32-PCLNR-22064-123	24	03	22	26	45	0-	6°	-11°0	.3	
12	PSC32-PCLNL-22064-123	24	03	22	26	45	0-	6°	-11°0	.3	
12P	SC32-PCLNR-22096-123	24	03	22	29	68	2-	6°	-11°0	.3	
12	PSC32-PCLNL-22096-123	24	03	22	29	68	2-	6°	-11°0	.3	
12P	SC40-PCLNR-17090-124	03	22	51	79	06	9-	6°	-11°0	.5	
12	PSC40-PCLNL-17090-124	03	22	51	79	06	9-	6°	-11°0	.5	
12P	SC40-PCLNR-22110-124	04	03	22	21	108	9-	6°	-11°0	.5	
12	PSC40-PCLNL-22110-124	04	03	22	21	108	9-	6°	-11°0	.5	
12P	SC40-PCLNR-27080-124	05	04	02	78	06	0-	6°	-10°	0.5	
12	PSC40-PCLNL-27080-124	05	04	02	78	06	0-	6°	-10°	0.5	
12P	SC40-PCLNR-27120-124	05	04	02	71	20	100	-6°-	11°0	.5	
12	PSC40-PCLNL-27120-124	05	04	02	71	20	100	-6°-	11°0	.5	
12P	SC50-PCLNR-17090-125	03	22	51	79	06	7-	6°	-11°	0.65	
12	PSC50-PCLNL-17090-125	03	22	51	79	06	7-	6°	-11°	0.65	

see next page →

Specifications and dimensions are for reference only and subject to change without notice. Please confirm the latest specifications before ordering.

MONGTEC
mongtec-tools.com

PCLNR/L-Kr 95°

› Technical parameters

Unit：mm

80°	Ordering code	Dm	Dmin	D1	f1	l1	l3	γ	λ	m (kg)	ISO insert
12	PSC50-PCLNR-22110-12	50	40	32	22	110	88	-6°	-11°0	.66	CN.. 1204..
12	PSC50-PCLNL-22110-12	50	40	32	22	110	88	-6°	-11°0	.66	
12	PSC50-PCLNR-27140-12	50	50	40	27	140	119-	6°	-10°0	.67	
12	PSC50-PCLNL-27140-12	50	50	40	27	140	119-	6°	-10°0	.67	
12	PSC50-PCLNR-35100-12	50	63	50	35	100	81	-6°-	7°	0.68	
12	PSC50-PCLNL-35100-12	50	63	50	35	100	81	-6°-	7°	0.68	
12	PSC63-PCLNR-17100-12	63	32	25	17	100	74	-6°	-11°1		
12	PSC63-PCLNL-17100-12	63	32	25	17	100	74	-6°	-11°1		
12	PSC63-PCLNR-22110-12	63	40	32	22	110	84	-6°	-11°	12	
12	PSC63-PCLNL-22110-12	63	40	32	22	110	84	-6°	-11°1	.2	

› Main spare parts

PSC size	Insert	screw	Shim	Key	Lever
PSC32-PSC63(D25)	12	414.838.32-		241.025.56	413.838.41-1
PSC32-PSC63(D32-D50)	12	414.438.21	322.318.502	41.030.63	413.438.41

The insert need to be ordered seperately. Other accessories are included in the order

The sapare parts can be ordered separately. Please inquire on demand

Specifications and dimensions are for reference only and subject to change without notice. Please confirm the latest specifications before ordering.

PCLNR/L-Kr 95(° HP)

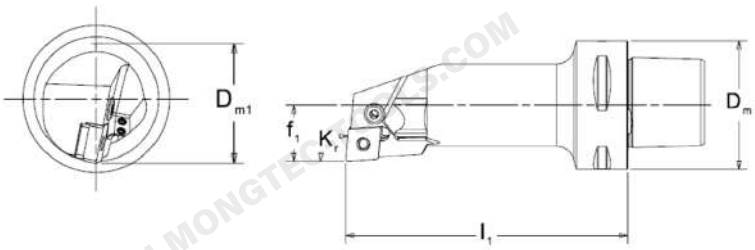

CNMM CNMG CNMA CNGA
The insert is for illustration only

› Technical parameters

Unit：mm

80°	Ordering code	Dm	Dmin	D1	f1	l1	γ	λ	m (kg)	ISO insert
09	PSC40-PCLNR-13080-09HP	40	25	20	13	80	-6°	-11°	0.41	CN.. 0903..
09	PSC40-PCLNL-13080-09HP	40	25	20	13	80	-6°	-11°	0.41	
09	PSC50-PCLNR-13080-09HP	50	25	20	13	80	-6°	-11°	0.61	
09	PSC50-PCLNL-13080-09HP	50	25	20	13	80	-6°	-11°	0.61	
12	PSC32-PCLNR-17090-12HP	32	32	25	17	90	-6°	-11°	0.37	CN.. 1204..
12	PSC32-PCLNL-17090-12HP	32	32	25	17	90	-6°	-11°	0.37	
12	PSC32-PCLNR-22064-12HP	32	40	32	22	64	-6°	-11°	0.37	
12	PSC32-PCLNL-22064-12HP	32	40	32	22	64	-6°	-11°	0.37	
12	PSC32-PCLNR-22096-12HP	32	40	32	22	96	-6°	-11°	0.55	
12	PSC32-PCLNL-22096-12HP	32	40	32	22	96	-6°	-11°	0.55	
12	PSC40-PCLNR-17090-12HP	40	32	25	17	90	-6°	-11°	0.51	
12	PSC40-PCLNL-17090-12HP	40	32	25	17	90	-6°	-11°	0.51	
12	PSC40-PCLNR-22110-12HP	40	40	32	22	110	-6°	-11°	0.77	
12	PSC40-PCLNL-22110-12HP	40	40	32	22	110	-6°	-11°	0.77	
12	PSC40-PCLNR-27080-12HP	40	50	40	27	80	-6°	-10°	0.72	
12	PSC40-PCLNL-27080-12HP	40	50	40	27	80	-6°	-10°	0.72	
12	PSC40-PCLNR-27120-12HP	40	50	40	27	120	-6°	-10°	1.08	
12	PSC40-PCLNL-27120-12HP	40	50	40	27	120	-6°	-10°	1.08	

see next page →

Specifications and dimensions are for reference only and subject to change without notice. Please confirm the latest specifications before ordering.

PCLNR/L-Kr 95(° HP)

› Technical parameters

Unit：mm

80°	Ordering code	Dm	Dmin	D1	f1	l1	γ	λ	m (kg)	ISO insert
12	PSC50-PCLNR-17090-12HP	50	32	25	17	90	-6°	-11°	0.7	CN.. 1204..
12	PSC50-PCLNL-17090-12HP5	03	22	51	79	0	-6°	-11°	0.7	
12	PSC50-PCLNR-22110-12HP	50	40	32	22	110	-6°	-11°	0.98	
12	PSC50-PCLNL-22110-12HP5	04	03	22	2	110	-6°	-11°	0.98	
12	PSC50-PCLNR-27140-12HP	50	50	40	27	140	-6°	-10°	1.47	
12	PSC50-PCLNL-27140-12HP5	05	04	02	7	140	-6°	-10°	1.47	
12	PSC50-PCLNR-35100-12HP	50	63	50	35	100	-6°	-7°	1.43	
12	PSC50-PCLNL-35100-12HP5	06	35	03	5	100	-6°	-7°	1.43	
12	PSC63-PCLNR-17100-12HP	63	32	25	17	100	-6°	-11°	1.13	
12	PSC63-PCLNL-17100-12HP6	33	22	51	7	100	-6°	-11°	1.13	
12	PSC63-PCLNR-22110-12HP	63	40	32	22	110	-6°	-11°	1.34	
12	PSC63-PCLNL-22110-12HP6	34	03	22	2	110	-6°	-11°	1.34	
12	PSC50-PCLNR-35150-16HP	50	63	50	35	150	-6°	-11°	2.11	CN.. 1606..
16	PSC50-PCLNL-35150-16HP5	06	35	0	35	150	-6°	-11°	2.11	
16	PSC63-PCLNR-27140-16HP	63	50	40	27	140	-6°	-11°	1.79	
16	PSC63-PCLNL-27140-16HP6	35	04	02	7	140	-6°	-11°	1.79	
16	PSC63-PCLNR-35175-16HP	63	63	50	35	175	-6°	-11°	2.89	
16	PSC63-PCLNL-35175-16HP6	36	35	03	5	175	-6°	-11°	2.89	

› Main spare parts

PSC size	Insert	screw	Shim	Key	Lever	Nozzle
PSC40-PSC50	09	414.438.29	-2	41.020.50	413.438.45-1	691.026.13
PSC32-PSC63（D25）	12	414.838.32	-2	41.025.56	413.838.41-1	691.026.13
PSC32-PSC63（D32-50）	12	414.438.21	322.318.50	241.030.63	413.438.41	691.026.13
PSC50-PSC63	16	414.838.31	322.318.52	241.030.63	413.838.40	691.026.13

The insert need to be ordered seperately. Other accessories are included in the order

The sapare parts can be ordered separately. Please inquire on demand

Specifications and dimensions are for reference only and subject to change without notice. Please confirm the latest specifications before ordering.

PSKNR/L-Kr 75°

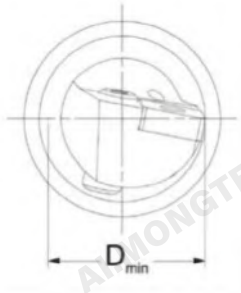

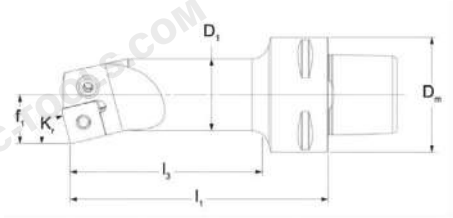

SNMM SNMG SNMA SNGA
The insert is for illustration only

› Technical parameters

Unit：mm

90°	Ordering code	Dm	Dmin	D1	f1	l1	l3	γ	λ	m (kg)	ISO insert
12	PSC40-PSKNR-17090-124	03	22	51	79	06	9	-6°	-11°	0.45	SN.. 1204..
12	PSC50-PSKNR-17090-125	03	22	51	79	06	7	-6°	-11°	0.51	
12	PSC50-PSKNR-22110-125	04	03	22	21	108	8	-6°	-10°	0.7	
12	PSC50-PSKNR-27140-125	05	04	02	71	40	119	-6°	-10°	1.4	
12	PSC63-PSKNR-22110-126	34	03	22	21	108	4	-6°	-10°	1.3	

› Main spare parts

PSC size	Insert	screw	Shim	Key	Lever
PSC40-PSC50(D25)	124	14.838.32	-2	41.025.56	413.838.41-1
PSC50-PSC63(D32-D40)	124	14.438.21	322.438.51	241.030.63	413.438.41

The insert need to be ordered seperately. Other accessories are included in the order
The sapare parts can be ordered separately. Please inquire on demand

Specifications and dimensions are for reference only and subject to change without notice. Please confirm the latest specifications before ordering.

PSKNR/L-Kr 75° (HP)

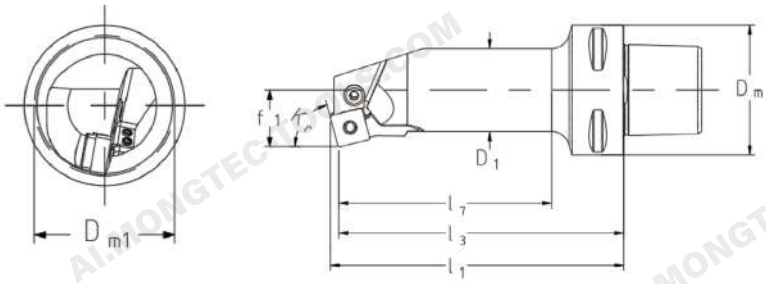

SNMM SNMG SNMA SNGA
The insert is for illustration only

› Technical parameters

Unit：mm

80°	Ordering code	Dm	Dmin	D1	f1	l1	γ	λ	m (kg)	ISO insert
12	PSC40-PSKNR-17090-12HP	40	32	25	17	90	-6°	-11°	0.51	SN..1204..
12	PSC40-PSKNL-17090-12HP	40	32	25	17	90	-6°	-11°	0.51	
12	PSC40-PSKNR-22110-12HP	40	40	32	22	110	-6°	-10°	0.79	
12	PSC40-PSKNL-22110-12HP	40	40	32	22	110	-6°	-10°	0.79	
12	PSC50-PSKNR-17090-12HP	50	32	25	17	90	-6°	-11°	0.71	
12	PSC50-PSKNL-17090-12HP	50	32	25	17	90	-6°	-11°	0.71	
12	PSC50-PSKNR-22110-12HP	50	40	32	22	110	-6°	-10°	0.98	
12	PSC50-PSKNL-22110-12HP	50	40	32	22	110	-6°	-10°	0.98	
12	PSC50-PSKNR-27140-12HP	50	50	40	27	140	-6°	-10°	1.49	
12	PSC50-PSKNL-27140-12HP	50	50	40	27	140	-6°	-10°	1.49	
12	PSC63-PSKNR-22110-12HP	63	40	32	22	110	-6°	-10°	1.35	
12	PSC63-PSKNL-22110-12HP	63	40	32	22	110	-6°	-10°	1.35	
15	PSC63-PSKNR-35175-15HP	63	63	50	35	175	-6°	-9°	2.96	SN..1506..
15	PSC63-PSKNL-35175-15HP	63	63	50	35	175	-6°	-9°	2.96	

see next page →

Specifications and dimensions are for reference only and subject to change without notice. Please confirm the latest specifications before ordering.

PSKNR/L-Kr 75° (HP)

› Main spare parts

PSC size	Insert	screw	Shim	Key	Lever	Nozzle
PSC40-PSC50（D 25）	12	414.838.32	/2	41.025.56	413.838.41-1	691.026.13
PSC40-PSC63（D 32-50）	12	414.438.21	322.438.51	241.030.63	413.438.41	691.026.13
PSC63	15	322.438.57	322.438.57	241.030.63	413.838.40	691.026.13

The insert need to be ordered seperately. Other accessories are included in the order

The sapare parts can be ordered separately. Please inquire on demand

Specifications and dimensions are for reference only and subject to change without notice. Please confirm the latest specifications before ordering.

PDUNR/L-Kr 93(° HP)

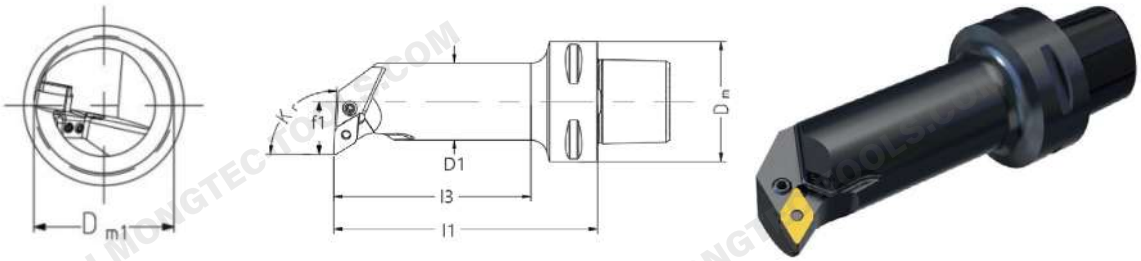

DNMM DNMX DNMG DNMA DNGA
The insert is for illustration only

› Technical parameters

Unit：mm

55°	Ordering code	Dm	Dmin	D1	f1	l1	l3	γ	λ	m (kg)	ISO insert
11	PSC32-PDUNR-17090-11HP	32	32	25	17	90	75	-6°	-11°	0.37	DN..1104..
11	PSC32-PDUNL-17090-11HP	32	32	25	17	90	75	-6°	-11°	0.37	
11	PSC40-PDUNR-17090-11HP	40	32	25	17	90	69	-6°	-11°	0.5	
11	PSC40-PDUNL-17090-11HP	40	32	25	17	90	69	-6°	-11°	0.5	
11	PSC40-PDUNR-22110-11HP	40	40	32	22	110	89	-6°	-10°	0.77	
11	PSC40-PDUNL-22110-11HP	40	40	32	22	110	89	-6°	-10°	0.77	
11	PSC50-PDUNR-17090-11HP	50	32	25	17	90	67	-6°	-11°	0.7	
11	PSC50-PDUNL-17090-11HP	50	32	25	17	90	67	-6°	-11°	0.7	
11	PSC50-PDUNR-22110-11HP	50	40	32	22	110	88	-6°	-10°	0.98	
11	PSC50-PDUNL-22110-11HP	50	40	32	22	110	88	-6°	-10°	0.98	
11	PSC63-PDUNR-17100-11HP	63	32	25	17	100	74	-6°	-11°	1.12	
11	PSC63-PDUNL-17100-11HP	63	32	25	17	100	74	-6°	-11°	1.12	

see next page →

Specifications and dimensions are for reference only and subject to change without notice. Please confirm the latest specifications before ordering.

PDUNR/L-Kr 93(° HP)

› Technical parameters

Unit：mm

55°	Ordering code	Dm	Dmin	D1	f1	l1	l3	γ	λ	m (kg)	ISO insert
15	PSC40-PDUNR-27080-15HP	40	50	40	27	80	60	-6°	-11°	0.7	DN..1506..
15	PSC40-PDUNL-27080-15HP	40	50	40	27	80	60	-6°	-11°	0.7	
15	PSC40-PDUNR-27120-15HP	40	50	40	27	120	100	-6°	-11°	1.07	
15	PSC40-PDUNL-27120-15HP	40	50	40	27	120	100	-6°	-11°	1.07	
15	PSC50-PDUNR-27140-15HP	50	50	40	27	140	119	-6°	-11°	1.45	
15	PSC50-PDUNL-27140-15HP	50	50	40	27	140	119	-6°	-11°	1.45	
15	PSC50-PDUNR-35100-15HP	50	63	50	35	100	81	-6°	-10°	1.43	
15	PSC50-PDUNL-35100-15HP	50	63	50	35	100	81	-6°	-10°	1.43	
15	PSC50-PDUNR-35150-15HP	50	63	50	35	150	131	-6°	-10°	2.15	
15	PSC50-PDUNL-35150-15HP	50	63	50	35	150	131	-6°	-10°	2.15	
15	PSC63-PDUNR-22110-15HP	63	40	32	22	110	84	-6°	-12°	1.33	
15	PSC63-PDUNL-22110-15HP	63	40	32	22	110	84	-6°	-12°	1.33	
15	PSC63-PDUNR-27140-15HP	63	50	40	27	140	115	-6°	-11°	1.81	
15	PSC63-PDUNL-27140-15HP	63	50	40	27	140	115	-6°	-11°	1.81	
15	PSC63-PDUNR-35175-15HP	63	63	50	35	175	152	-6°	-10°	2.91	
15	PSC63-PDUNL-35175-15HP	63	63	50	35	175	152	-6°	-10°	2.91	

› Main spare parts

PSC size	Insert	screw	Shim	Key	Lever	Nozzle
PSC32-PSC63（D 25）	11	414.838.30	-2	41.020.50	413.015.21	691.026.13
PSC40-PSC50（D 32）	11	414.438.20	322 255.01	241.025.56	413.001.01	691.026.13
PSC40-PSC63	15	414.438.30	322.358.51	241.030.63	413.438.47	691.026.13

The insert need to be ordered seperately. Other accessories are included in the order

The sapare parts can be ordered separately. Please inquire on demand

Specifications and dimensions are for reference only and subject to change without notice. Please confirm the latest specifications before ordering.

PTFNR/L-Kr 91°(HP)

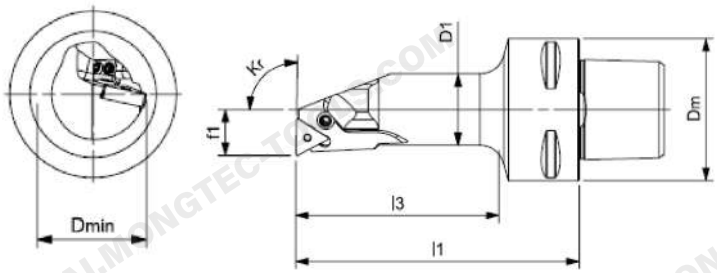

TNMM TNMX TNMG TNMA TNGA
The insert is for illustration only

› Technical parameters

Unit：mm

55°	Ordering code	Dm	DminD	1f	1l	1l	3	γ	λ	m (kg)	ISO insert
11	PSC40-PTFNR-13080-11HP	40.0	32.0	20.0	13.0	80.05	1.9	-6°	-12°	0.41	TN..1103..
11	PSC40-PTFNL-13080-11HP	40.0	32.0	20.0	13.0	80.05	1.9	-6°	-12°	0.41	

› Main spare parts

PSC size	Insert	screw	Shim	Key	Lever	Nozzle
PSC40	11	414.438.29	-2	41.030.63	413.438.46-1	691.026.23

The insert need to be ordered seperately. Other accessories are included in the order
The sapare parts can be ordered separately. Please inquire on demand

Specifications and dimensions are for reference only and subject to change without notice. Please confirm the latest specifications before ordering.

SCLCR/L-Kr 95°

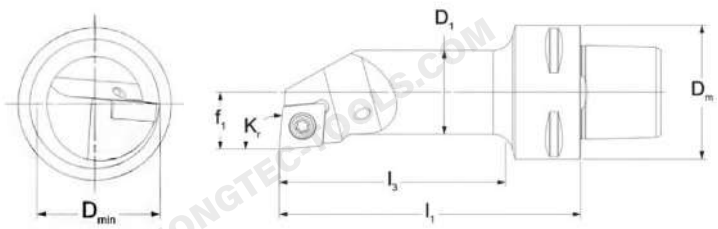

CCMT CCGT CCGX CCET CCMW
The insert is for illustration only

› Technical parameters

Unit：mm

80°	Ordering code	DmD	minD	1f	1l	1l	3	γ	λ	m (kg)	ISO insert
09	PSC32-SCLCR-11065-09	32	20	16	11	65	48	0°	-12°0	.21	CC..09T3..
09	PSC32-SCLCL-11065-09	32	20	16	11	65	48	0°	-12°0	.21	
09	PSC32-SCLCR-13075-09	32	25	20	13	75	58	0°	-8°0	.27	
09	PSC32-SCLCL-13075-09	32	25	20	13	75	58	0°	-8°0	.27	
09	PSC32-SCLCR-17090-09	32	32	25	17	90	74	0°	-6°0	.38	
09	PSC32-SCLCL-17090-09	32	32	25	17	90	74	0°	-6°0	.38	
09	PSC40-SCLCR-11070-09	40	20	16	11	70	47	0°	-12°0	.36	
09	PSC40-SCLCL-11070-09	40	20	16	11	70	47	0°	-12°0	.36	
09	PSC40-SCLCR-13080-09	40	25	20	13	80	57	0°	-8°0	.41	
09	PSC40-SCLCL-13080-09	40	25	20	13	80	57	0°	-8°0	.41	
09	PSC40-SCLCR-17090-09	40	32	25	17	90	68	0°	-6°0	.51	
09	PSC40-SCLCL-17090-09	40	32	25	17	90	68	0°	-6°0	.51	
09	PSC40-SCLCR-27080-09	40	50	40	27	80	60	0°	-6°0	.69	
09	PSC40-SCLCL-27080-09	40	50	40	27	80	60	0°	-6°0	.69	
09	PSC50-SCLCR-11070-09	50	20	16	11	70	46	0°	-12°0	.57	
09	PSC50-SCLCL-11070-09	50	20	16	11	70	46	0°	-12°0	.57	
09	PSC50-SCLCR-13080-09	50	25	20	13	80	56	0°	-8°0	.65	
09	PSC50-SCLCL-13080-09	50	25	20	13	80	56	0°	-8°0	.65	
09	PSC50-SCLCR-17090-09	50	32	25	17	90	67	0°	-6°0	.69	
09	PSC50-SCLCL-17090-09	50	32	25	17	90	67	0°	-6°0	.69	

see next page →

Specifications and dimensions are for reference only and subject to change without notice. Please confirm the latest specifications before ordering.

SCLCR/L-Kr 95°

› Technical parameters

Unit：mm

80°	Ordering code	Dm	Dmin	D1	f1	l1	l3	γ	λ	m (kg)	ISO insert
12	PSC32-SCLCR-17090-12	32	32	25	17	90	75	0°	-6°	0.32	CC..1204..
12	PSC32-SCLCL-17090-12	32	32	25	17	90	75	0°	-6°	0.32	
12	PSC32-SCLCR-22064-12	32	40	31.7	22	64	50	0°	-10°	0.31	
12	PSC32-SCLCL-22064-12	32	40	31.7	22	64	50	0°	-10°	0.31	
12	PSC32-SCLCR-22090-12	32	40	31.7	22	90	82	0°	-10°	0.5	
12	PSC32-SCLCL-22090-12	32	40	31.7	22	90	82	0°	-10°	0.5	
12	PSC32-SCLCR-22096-12	32	40	32	22	96	81	0°	-10°	0.54	
12	PSC32-SCLCL-22096-12	32	40	32	22	96	81	0°	-10°	0.54	
12	PSC40-SCLCR-17090-12	40	32	25	17	90	69	0°	-6°	0.45	
12	PSC40-SCLCL-17090-12	40	32	25	17	90	69	0°	-6°	0.45	
12	PSC40-SCLCR-22110-12	40	40	32	22	110	89	0°	-10°	0.68	
12	PSC40-SCLCL-22110-12	40	40	32	22	110	89	0°	-10°	0.68	
12	PSC40-SCLCR-27080-12	40	50	39.7	27	80	60	0°	-8°	0.63	
12	PSC40-SCLCL-27080-12	40	50	39.7	27	80	60	0°	-8°	0.63	
12	PSC50-SCLCR-17090-12	50	32	25	17	90	67	0°	-6°	0.63	
12	PSC50-SCLCL-17090-12	50	32	25	17	90	67	0°	-6°	0.63	
12	PSC50-SCLCR-22110-12	50	40	32	22	110	88	0°	-10°	0.87	
12	PSC50-SCLCL-22110-12	50	40	32	22	110	88	0°	-10°	0.87	
12	PSC50-SCLCR-27140-12	50	50	40	27	140	119	0°	-8°	1.35	
12	PSC50-SCLCL-27140-12	50	50	40	27	140	119	0°	-8°	1.35	
12	PSC50-SCLCR-35100-12	50	63	49.7	35	100	80	0°	-5°	1.27	
12	PSC50-SCLCL-35100-12	50	63	49.7	35	100	80	0°	-5°	1.27	

› Main spare parts

PSC size	Insert	Shim screw	Shim	Key	Insert screw
PSC32-PSC50（D16-20）	09	-	-	248.150.10	ILD3581
PSC32-PSC50（D25）	09	-	-	248.150.10	ILD3510
PSC32-PSC50（D40）	09	512.090.01	322 232.01	248.150.10&241.035.65	ILD3512
PSC32-PSC50（D25）	12	-	-	248.150.10	ILD4011-A
PSC32-PSC50（D32-50）	12	512.090.03	322.232.02	248.150.10&241.040.70	ILD4014

The insert need to be ordered seperately. Other accessories are included in the order

The sapare parts can be ordered separately. Please inquire on

Specifications and dimensions are for reference only and subject to change without notice. Please confirm the latest specifications before ordering.

SCLCR/L-Kr 93°(HP)

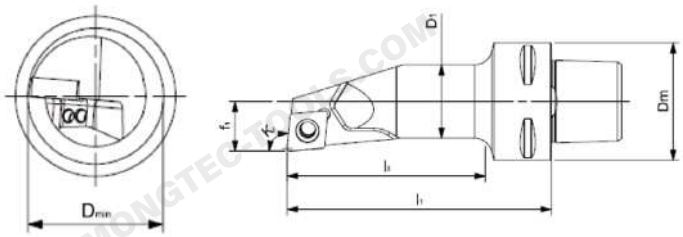

CCMT CCGT CCGX CCET CCMW
The insert is for illustration only

› Technical parameters

Unit：mm

55°	Ordering code	Dm	Dmin	D1	f1	l1	l3	γ	λ	m (kg)	ISO insert
09	PSC32-SCLCR-11065-09HP3	22	1.51	61	16	54	80	°-	12°0	.22	CC..09T3..
09	PSC32-SCLCL-11065-09HP3	22	1.51	61	16	54	80	°-	12°0	.22	
09	PSC40-SCLCR-11070-09HP4	02	1.51	61	17	04	70	°-	12°0	.36	
09	PSC40-SCLCL-11070-09HP4	02	1.51	61	17	04	70	°-	12°0	.36	
09	PSC40-SCLCR-13080-09HP4	02	52	01	38	05	70	°	-8°	0.41	
09	PSC40-SCLCL-13080-09HP4	02	52	01	38	05	70	°	-8°	0.41	
09	PSC50-SCLCR-11070-09HP5	02	1.51	61	17	04	60	°-	12°0	.56	
09	PSC50-SCLCL-11070-09HP5	02	1.51	61	17	04	60	°-	12°0	.56	
09	PSC50-SCLCR-13080-09HP5	02	52	01	38	05	60	°	-8°	0.61	
09	PSC50-SCLCL-13080-09HP5	02	52	01	38	05	60	°	-8°	0.61	
12	PSC40-SCLCR-17090-12HP4	03	22	51	79	06	90	°	-6°	0.50	CC..1204..
12	PSC40-SCLCL-17090-12HP4	03	22	51	79	06	90	°	-6°	0.50	
12	PSC50-SCLCR-17090-12HP5	03	22	51	79	06	70	°	-6°	0.69	
12	PSC50-SCLCL-17090-12HP5	03	22	51	79	06	70	°	-6°	0.69	

› Main spare parts

PSC size	Insert	Shim screw	Shim	Key	Insert screw	Nozzle
PSC32-PSC50	09	--		248.150.10	ILD3581	691.026.13
PSC40-PSC50	12-		-	248.150.10	ILD4011-A	691.026.13

The insert need to be ordered seperately. Other accessories are included in the order
The sapare parts can be ordered separately. Please inquire on demand

Specifications and dimensions are for reference only and subject to change without notice. Please confirm the latest specifications before ordering.

SDUCR/L-Kr 93°

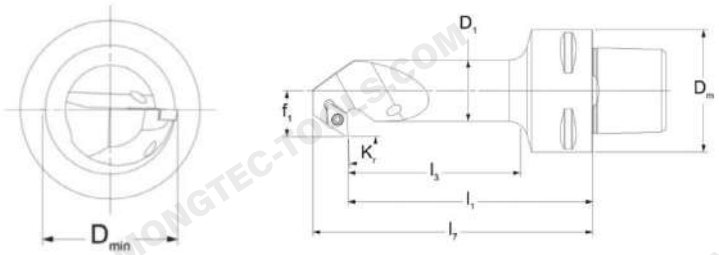

DCMT DCMX DCGT DCGX DCET DCMW
The insert is for illustration only

› Technical parameters

Unit：mm

55°	Ordering code	Dm	Dmin	D1	f1	l1	l3	l7	γ	λ	m (kg)	ISO insert
07	PSC32-SDUCR-13070-07X3	22	21	61	37	05	48	0.70	°	-6°	0.19	DC.. 0702..
07	PSC32-SDUCL-13070-07X	32	22	161	37	05	48	0.70	°	-6°	0.19	
07	PSC32-SDUCR-15080-07X3	22	72	01	58	06	49	1.5	0°	-3°	0.26	
07	PSC32-SDUCL-15080-07X	32	27	20	158	06	49	1.5	0°	-3°	0.26	
07	PSC40-SDUCR-13070-07X4	02	21	61	37	04	88	0.70	°	-6°	0.32	
07	PSC40-SDUCL-13070-07X	40	22	161	37	04	88	0.70	°	-6°	0.32	
07	PSC40-SDUCR-15080-07X4	02	72	01	58	05	89	1.5	0°	-3°	0.39	
07	PSC40-SDUCL-15080-07X	40	27	20	158	05	89	1.5	0°	-3°	0.39	
07	PSC40-SDUCR-18090-07X4	03	22	51	89	06	91	01.5	0°	-3°	0.49	
07	PSC40-SDUCL-18090-07X	40	32	25	189	06	91	01.5	0°	-3°	0.49	
07	PSC50-SDUCR-15080-07X5	02	72	01	58	05	89	1.5	0°	-3°	0.58	
07	PSC50-SDUCL-15080-07X	50	27	20	158	05	89	1.5	0°	-3°	0.58	
07	PSC50-SDUCR-18090-07X5	03	22	51	89	06	81	01.5	0°	-3°	0.67	
07	PSC50-SDUCL-18090-07X	50	32	25	189	06	81	01.5	0°	-3°	0.67	
07	PSC32-SDUCR-11065-07	32	20	161	1	65	48	-	0°	-8°	0.21	
07	PSC32-SDUCL-11065-073	22	01	61	1	65	48	-	0°	-8°	0.21	
07	PSC40-SDUCR-11070-07	40	20	161	1	70	47	-	0°	-8°	0.36	
07	PSC40-SDUCL-11070-074	02	01	61	1	70	47	-	0°	-8°	0.36	
07	PSC50-SDUCR-11070-07	50	20	161	1	70	46	-	0°	-8°	0.55	
07	PSC50-SDUCL-11070-075	02	01	61	1	70	46	-	0°	-8°	0.55	

see next page →

Specifications and dimensions are for reference only and subject to change without notice. Please confirm the latest specifications before ordering.

MONGTEC
mongtec-tools.com

SDUCR/L-Kr 93°

› Technical parameters

Unit：mm

55°	Ordering code	Dm	Dmin	D1	f1	l1	l3	l7	γ	λ	m (kg)	ISO insert
11	PSC32-SDUCR-13075-11	32	25	20	13	75	58	-	0°	-8°	0.26	DC..11T3..
11	PSC32-SDUCL-13075-11	32	25	20	13	75	58	-	0°	-8°	0.26	
11	PSC32-SDUCR-17090-11	32	32	25	17	90	73	-	0°	-6°	0.38	
11	PSC32-SDUCL-17090-11	32	32	25	17	90	73	-	0°	-6°	0.38	
11	PSC40-SDUCR-13080-11	40	25	20	13	80	57	-	0°	-8°	0.41	
11	PSC40-SDUCL-13080-11	40	25	20	13	80	57	-	0°	-8°	0.41	
11	PSC40-SDUCR-17090-11	40	32	25	17	90	68	-	0°	-6°	0.52	
11	PSC40-SDUCL-17090-11	40	32	25	17	90	68	-	0°	-6°	0.52	
11	PSC40-SDUCR-22110-11	40	40	32	22	110	89	-	0°	-6°	0.76	
11	PSC40-SDUCL-22110-11	40	40	32	22	110	89	-	0°	-6°	0.76	
11	PSC40-SDUCR-27080-11	40	50	40	27	80	60	-	0°	-6°	0.72	
11	PSC40-SDUCL-27080-11	40	50	40	27	80	60	-	0°	-6°	0.72	
11	PSC50-SDUCR-13080-11	50	25	20	13	80	56	-	0°	-8°	0.65	
11	PSC50-SDUCL-13080-11	50	25	20	13	80	56	-	0°	-8°	0.65	
11	PSC50-SDUCR-17090-11	50	32	25	17	90	67	-	0°	-6°	0.7	
11	PSC50-SDUCL-17090-11	50	32	25	17	90	67	-	0°	-6°	0.7	
11	PSC50-SDUCR-22110-11	50	40	32	22	110	88	-	0°	-6°	0.96	
11	PSC50-SDUCL-22110-11	50	40	32	22	110	88	-	0°	-6°	0.96	
11	PSC50-SDUCR-35100-11	50	63	50	35	100	80	-	0°	-4°	1.35	
11	PSC50-SDUCL-35100-11	50	63	50	35	100	80	-	0°	-4°	1.35	

› Main spare parts

PSC size	Insert	Shim screw	Shim	Key	Insert screw
PSC32-PSC50	07	--		242.070.35	ILD2565
PSC32-PSC50（D 20）	11	--		248.150.10	ILD3581
PSC32-PSC50（D 25）	11	--		248.150.10	ILD3510
PSC32-PSC50	11	512.090.01	322.263.01	248.150.10&241.035.65	ILD3512

The insert need to be ordered seperately. Other accessories are included in the order

The sapare parts can be ordered separately. Please inquire on demand

Specifications and dimensions are for reference only and subject to change without notice. Please confirm the latest specifications before ordering.

SDUCR/L-Kr 93°(HP)

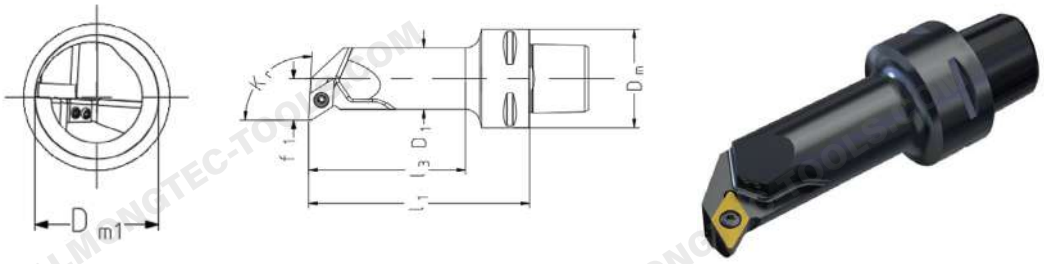

DCMT DCMX DCGT DCGX DCET DCMW
The insert is for illustration only

› Technical parameters

Unit：mm

55°	Ordering code	Dm	Dmin	D1	f1	l1	l3	γ	λ	m (kg)	ISO insert
11	PSC40-SDUCR-13080-11HP	40	25	20	13	80	58	0°	-8°	0.41	DC..11T3..
11	PSC40-SDUCL-13080-11HP	40	25	20	13	80	58	0°	-8°	0.41	
11	PSC40-SDUCR-17090-11HP	40	32	25	17	90	69	0°	-6°	0.5	
11	PSC40-SDUCL-17090-11HP	40	32	25	17	90	69	0°	-6°	0.5	
11	PSC50-SDUCR-13080-11HP	50	25	20	13	80	56	0°	-8°	0.6	
11	PSC50-SDUCL-13080-11HP	50	25	20	13	80	56	0°	-8°	0.6	
11	PSC50-SDUCR-17090-11HP	50	32	25	17	90	67	0°	-6°	0.69	
11	PSC50-SDUCL-17090-11HP	50	32	25	17	90	67	0°	-6°	0.69	

› Main spare parts

PSC size	Insert	Shim screw	Shim	Key	Insert screw	Nozzle
PSC40-PSC50（D20）	11	--		242.070.35	ILD3581	691.026.13
PSC40-PSC50（D25）	11	--		242.070.35	ILD3510	691.026.13

The insert need to be ordered seperately. Other accessories are included in the order
The sapare parts can be ordered separately. Please inquire on demand

Specifications and dimensions are for reference only and subject to change without notice. Please confirm the latest specifications before ordering.

STFCR/L-Kr 91°

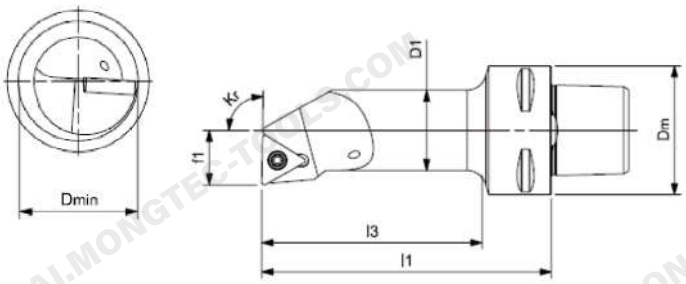

TCMT TCMX TCGT TCGX TCEX TCMW
The insert is for illustration only

› Technical parameters

Unit：mm

55°	Ordering code	Dm	Dmin	D1	f1	l1	l3	γ	λ	m (kg)	ISO insert
11	PSC40-STFCR-11070-11	40	20	16	11	70	47	0°	-4°0	.35	TC..1103
11	PSC40-STFCL-11070-11	40	20	16	11	70	47	0°	-4°0	.35	
11	PSC40-STFCR-13080-11	40	25	20	13	80	57	0°	-3°0	.4	
11	PSC40-STFCL-13080-11	40	25	20	13	80	57	0°	-3°0	.4	
16	PSC40-STFCR-17090-16	40	32	25	17	90	69	0°	-6°0	.45	TC..16T3..
16	PSC40-STFCL-17090-16	40	32	25	17	90	69	0°	-6°0	.45	
16	PSC40-STFCR-22110-16	40	40	32	22	110	89	0°	-10°	0.77	
16	PSC40-STFCL-22110-16	40	40	32	22	110	89	0°	-10°	0.77	

› Main spare parts

PSC size	Insert	Shim screw	Shim	Key	Insert screw
PSC40	11	--		242.070.35	ILD2565
PSC40（D 25）	16	--		248.150.10	ILD3510
PSC40（D 32）	16	512.090.01	322.320.01	248.150.10&241.035.65	ILD3512

The insert need to be ordered seperately. Other accessories are included in the order
The sapare parts can be ordered separately. Please inquire on demand

Specifications and dimensions are for reference only and subject to change without notice. Please confirm the latest specifications before ordering.

STFCR/L-Kr 91° (HP)

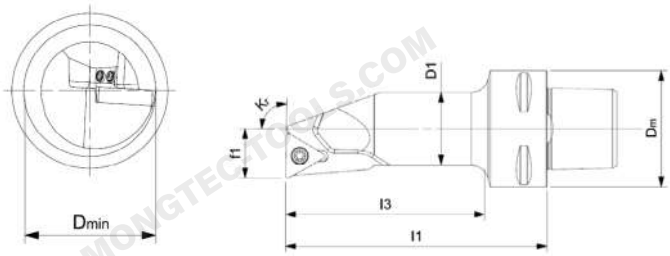

VBMT VBGT VCGX VCEX VCGT VCET VBMW VCMW
The insert is for illustration only

› Technical parameters

Unit：mm

55°	Ordering code	Dm	Dmin	D1	f1	l1	l3	γ	λ	m (kg)	ISO insert
16	PSC40-STFCR-17090-16HP	40.03	2.02	5.01	7.09	0.06	9.00	°	-6°	0.51	TC..16T3..
16	PSC40-STFCL-17090-16HP	40.03	2.02	5.01	7.09	0.06	9.00	°	-6°	0.51	
16	PSC50-STFCR-17090-16HP	50.03	2.02	5.01	7.09	0.06	7.00	°	-6°	0.70	
16	PSC50-STFCL-17090-16HP	50.03	2.02	5.01	7.09	0.06	7.00	°	-6°	0.70	
16	PSC50-STFCR-22110-16HP	50.04	0.03	2.02	2.0	110.0	88.00	°	-10°0	.96	
16	PSC50-STFCL-22110-16HP	50.04	0.03	2.02	2.0	110.0	88.00	°	-10°0	.96	

› Main spare parts

PSC size	Insert	Shim screw	Shim	Key	Insert screw	Nozzle
PSC40-PSC50（D25）	16	--		248.150.10	ILD35106	91.026.23
PSC50（D32）	16	512.090.01	322.320.01	248.150.10&241.035.65	ILD35126	91.026.23

The insert need to be ordered seperately. Other accessories are included in the order
The sapare parts can be ordered separately. Please inquire on demand

Specifications and dimensions are for reference only and subject to change without notice. Please confirm the latest specifications before ordering.

SVQBR/L-Kr 107.5°

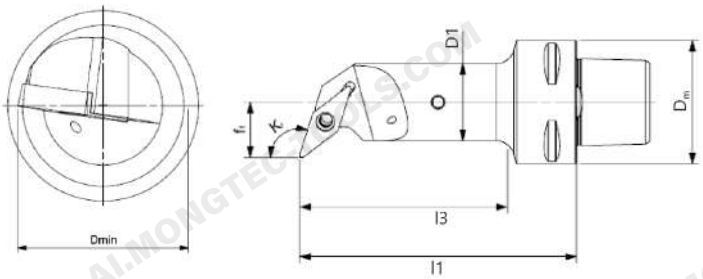

VBMT VBGT VCGX VCEX VCGT VCET VBMW VCMW
The insert is for illustration only

› Technical parameters

Unit：mm

55°	Ordering code	Dm	Dmin	D1	f1	l1	l3	γ	λ	m (kg)	ISO insert
16	PSC40-SVQBR-18090-16	40	33	25	18	90	69	0°	-6°	0.5	VB..1604..
16	PSC40-SVQBL-18090-16	40	33	25	18	90	69	0°	-6°	0.5	
16	PSC40-SVQBR-22110-16	40	40	32	22	110	89	0°	-8°	0.73	
16	PSC40-SVQBL-22110-16	40	40	32	22	110	89	0°	-8°	0.73	
16	PSC40-SVQBR-27120-16	40	50	40	27	120	100	0°	-8°	0.99	
16	PSC40-SVQBL-27120-16	40	50	40	27	120	100	0°	-8°	0.99	
16	PSC50-SVQBR-18090-16	50	33	25	18	90	67	0°	-6°	0.68	
16	PSC50-SVQBL-18090-16	50	33	25	18	90	67	0°	-6°	0.68	
16	PSC50-SVQBR-22110-16	50	40	32	22	110	88	0°	-8°	0.93	
16	PSC50-SVQBL-22110-16	50	40	32	22	110	88	0°	-8°	0.93	
16	PSC50-SVQBR-27140-16	50	50	40	27	140	119	0°	-8°	1.38	
16	PSC50-SVQBL-27140-16	50	50	40	27	140	119	0°	-8°	1.38	
16	PSC50-SVQBR-35150-16	50	63	50	35	150	131	0°	-7°	1.9	
16	PSC50-SVQBL-35150-16	50	63	50	35	150	131	0°	-7°	1.9	
16	PSC63-SVQBR-27145-16	63	50	40	27	145	120	0°	-8°	1.76	
16	PSC63-SVQBL-27145-16	63	50	40	27	145	120	0°	-8°	1.76	
16	PSC63-SVQBR-35175-16	63	63	50	35	175	152	0°	-8°	2.89	
16	PSC63-SVQBL-35175-16	63	63	50	35	175	152	0°	-8°	2.89	

see next page →

Specifications and dimensions are for reference only and subject to change without notice. Please confirm the latest specifications before ordering.

SVQBR/L-Kr 107.5°

› Main spare parts

PSC size	Insert	Shim screw	Shim	Key	Insert screw
PSC40-PSC50（D25）	16	--		248.150.10	ILD3510
PSC40-PSC63	16	512 090-01	322.270.01	248.150.10&241.035.65	ILD3512

The insert need to be ordered seperately. Other accessories are included in the order

The sapare parts can be ordered separately. Please inquire on demand

Specifications and dimensions are for reference only and subject to change without notice. Please confirm the latest specifications before ordering.

SVQBR/L-Kr 107.5(° HP)

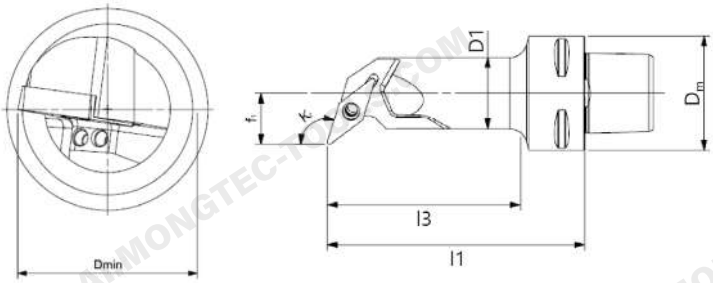

VBMT VBGT VCGX VCEX VCGT VCET VBMW VCMW
The insert is for illustration only

› Technical parameters

Unit：mm

55°	Ordering code	Dm	Dmin	D1	f1	l1	l3	γ	λ	m (kg)	ISO insert
16	PSC40-SVQBR-18090-16HP	40	33	25	18	90	68	0°	-6°	0.48	VB..1604..
16	PSC40-SVQBL-18090-16HP	40	33	25	18	90	68	0°	-6°	0.48	
16	PSC50-SVQBR-18090-16HP	50	33	25	18	90	67	0°	-6°	0.68	
16	PSC50-SVQBL-18090-16HP	50	33	25	18	90	67	0°	-6°	0.68	
16	PSC63-SVQBR-22120-16HP	63	40	32	22	120	94	0°	-8°	1.36	
16	PSC63-SVQBL-22120-16HP	63	40	32	22	120	94	0°	-8°	1.36	

› Main spare parts

PSC size	Insert	Shim screw	Shim	Key	Insert screw	Nozzle
PSC40-PSC50（D 25）	16	-	-	248.150.10	ILD3510	691.026.13
PSC63	16	512 090-01	322.270.01	248.150.10&241.035.65	ILD3512	691.026.13

The insert need to be ordered seperately. Other accessories are included in the order
The sapare parts can be ordered separately. Please inquire on demand

Specifications and dimensions are for reference only and subject to change without notice. Please confirm the latest specifications before ordering.

PSC-SR Face Slotting Adapter-F

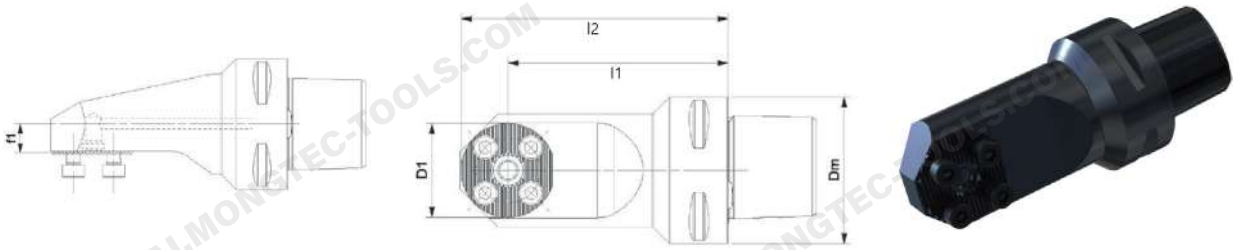

› Technical parameters

Unit：mm

Ordering code	Dm	D1(DCON-WS)	l2(LPR)	l1(LF)	f1(WF)	m (kg)
PSC40-SR32-60-RF	40	32	76	60	6	0.5
PSC40-SR32-60-LF	40	32	76	60	6	0.5
PSC40-SR40-60-RF	40	40	80	60	2	0.6
PSC40-SR40-60-LF	40	40	80	60	2	0.6
PSC50-SR32-75-RF	50	32	91	75	11	0.9
PSC50-SR32-75-LF	50	32	91	75	11	0.9
PSC50-SR40-75-RF	50	40	95	75	7	0.9
PSC50-SR40-75-LF	50	40	95	75	7	0.9
PSC63-SR32-90-RF	63	32	106	90	16	1.5
PSC63-SR32-90-LF	63	32	106	90	16	1.5
PSC63-SR40-90-RF	63	40	110	90	12	1.6
PSC63-SR40-90-LF	63	40	110	90	12	1.6

see next page →

Specifications and dimensions are for reference only and subject to change without notice. Please confirm the latest specifications before ordering.

PSC-SR Face Slotting Adapter-F

Main spare parts

Size	ScrewO	-ring	Key
32	113.050.121	82.061.162	41.040.70
40	113.060.121	82.061.162	41.050.80

The insert need to be ordered seperately. Other accessories are included in the order

The sapare parts can be ordered separately. Please inquire on demand

Naming And Coding Rules

PSC40 -- SR32 60 - R F

- F 90°
- L Left R Right
- Axial length L1
- D1 Serrated type size
- PSC size

PSC-SR Adapter Handle-F

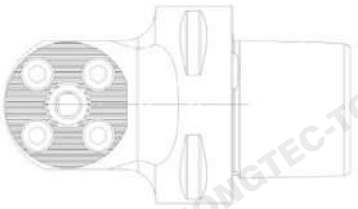

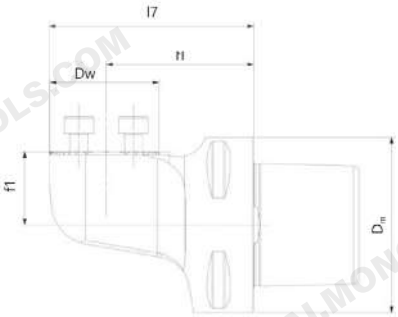

› Technical parameters

Unit：mm

Ordering code	Dm	Dw	L1	L7	F1	m (kg)
PSC32-SR25-33-RF	32	25	33	46	8	0.1
PSC32-SR25-33-LF	32	25	33	46	8	0.1
PSC40-SR25-37-RF	40	25	37	49	13	0.3
PSC40-SR25-37-LF	40	25	37	49	13	0.3
PSC40-SR32-59-RF	40	32	43	59	13	0.5
PSC40-SR32-59-LF	40	32	43	59	13	0.5
PSC40-SR40-68-RF	40	40	48	68	13	0.6
PSC40-SR40-68-LF	40	40	48	68	13	0.6
PSC50-SR25-48-RF	50	25	36	48	21	0.4
PSC50-SR25-48-LF	50	25	36	48	21	0.4
PSC50-SR32-58-RF	50	32	42	58	21	0.7
PSC50-SR32-58-LF	50	32	42	58	21	0.7
PSC50-SR40-66-RF	50	40	46	66	21	0.8
PSC50-SR40-66-LF	50	40	46	66	21	0.8
PSC63-SR25-46-RF	63	25	34	46	31	0.9
PSC63-SR25-46-LF	63	25	34	46	31	0.9
PSC63-SR32-54-RF	63	32	38	54	31	0.8
PSC63-SR32-54-LF	63	32	38	54	31	0.8
PSC63-SR40-62-RF	63	40	42	62	31	1.1
PSC63-SR40-62-LF	63	40	42	62	31	1.1

see next page →

Specifications and dimensions are for reference only and subject to change without notice. Please confirm the latest specifications before ordering.

PSC-SR Adapter Handle-F

› Technical parameters

Unit：mm

Ordering code	Dm	Dw	L1	L7	F1	m (kg)
PSC80-SR32-62-RF	80	32	46	62	41	1.7
PSC80-SR32-62-LF	80	32	46	62	41	1.7
PSC80-SR40-70-RF	80	40	50	70	41	2.4
PSC80-SR40-70-LF	80	40	50	70	41	2.4

› Main spare parts

Size	Screw	O-ring	Key
25	113.040.12	182.061.16	241.030.63
32	113.050.12		241.040.70
40	113.060.12		241.050.80

The insert need to be ordered seperately. Other accessories are included in the order

The sapare parts can be ordered separately. Please inquire on demand

› Naming And Coding Rules

PSC40 - SR32 - 59 - R F

- F 90°
- L Left R Right
- Axial length L1
- Serrated type size
- PSC size

PSC-SR Adapter Handle

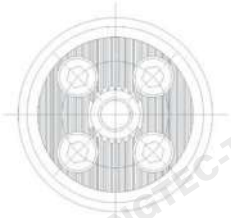

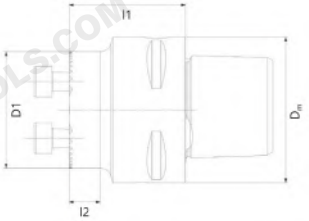

› Technical parameters

Unit：mm

Ordering code	TypeD	mD	1(DCON-WS)l	1(LF)	l2(LB)	m (kg)
PSC32-SR32-22-NG	13	23	22	2-		0.3
PSC40-SR32-32-NG	24	03	23	28		0.3
PSC40-SR40-32-NG	14	04	03	2-		0.4
PSC50-SR40-42-NG	25	04	0	42	17	0.5
PSC63-SR40-47-NG	26	34	04	71	61	.1

› Main spare parts

Size	ScrewO	-ring	Key
32	113.050.12	182.061.16	241.040.70
40	113.060.12	182.061.16	241.050.80

The insert need to be ordered seperately. Other accessories are included in the order

The sapare parts can be ordered separately. Please inquire on demand

› Naming And Coding Rules

PSC32 -- SR32 22 - N G

- G 0°
- N Null
- Axial length L1
- Serrated type size
- PSC size

PSC-SR Adapter Handle-R/L

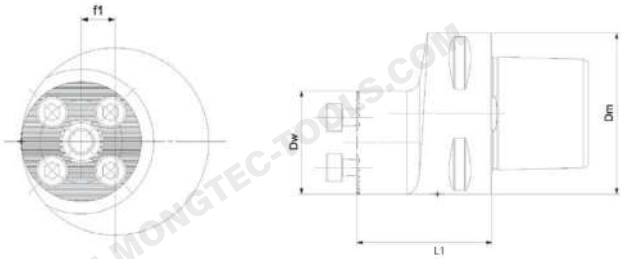

› Technical parameters

Unit : mm

Ordering code	Dm	Dw	F1	L1	m (kg)
PSC50-SR32-42-RG	50	32	9	42	0.6
PSC50-SR32-42-LG	50	32	9	42	0.6
PSC50-SR40-40-RG	50	40	11	40	0.7
PSC50-SR40-40-LG	50	40	11	40	0.7
PSC63-SR32-47-RG	63	32	15	47	1
PSC63-SR32-47-LG	63	32	15	47	1
PSC63-SR40-45-RG	63	40	21	45	1.1
PSC63-SR40-45-LG	63	40	21	45	1.1
PSC80-SR32-62-RG	80	32	24	62	1.8
PSC80-SR32-62-LG	80	32	24	62	1.8
PSC80-SR40-62-RG	80	40	20	62	2
PSC80-SR40-62-LG	80	40	20	62	2
PSC100-SR40-78-RG	100	40	30	78	4
PSC100-SR40-78-LG	100	40	30	78	4

see next page →

Specifications and dimensions are for reference only and subject to change without notice. Please confirm the latest specifications before ordering.

PSC-SR Adapter Handle

› Main spare parts

Size	ScrewO	-ring	Key
32	113.050.121	82.061.162	41.040.70
40	113.060.121	82.061.162	41.050.80

The insert need to be ordered seperately. Other accessories are included in the order

The sapare parts can be ordered separately. Please inquire on demand

› Naming And Coding Rules

PSC50 -- SR32 42 - R G

- G 0°
- L Left R Right
- Axial length L1
- Serrated type size
- PSC size

PSC-SR Adapter Handle-R/LX

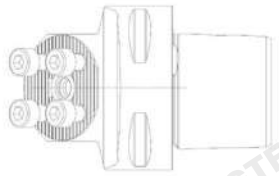

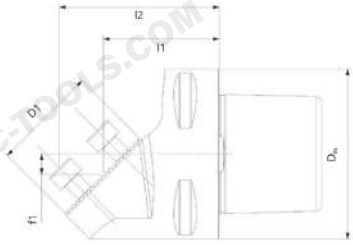

› Technical parameters

Unit : mm

Ordering code	Dm	D1(DCON-WS)	l2(LPR)	l1(LF)	f1(WF)	m (kg)
PSC50-SR25-RX-045	50	25	43	34	8	0.5
PSC50-SR25-LX-045	50	25	43	34	8	0.5
PSC50-SR32-RX-045	50	32	45	34	6	0.5
PSC50-SR32-LX-045	50	32	45	34	6	0.5
PSC50-SR40-RX-045-050	50	40	64	50	8	0.7
PSC50-SR40-LX-045-050	50	40	64	50	8	0.7
PSC63-SR25-RX-045	63	25	45	36	14	0.7
PSC63-SR25-LX-045	63	25	45	36	14	0.7
PSC63-SR32-RX-045	63	32	48	37	12	0.9
PSC63-SR32-LX-045	63	32	48	37	12	0.9
PSC63-SR40-RX-045-060	63	40	74	60	14	1.2
PSC63-SR40-LX-045-060	63	40	74	60	14	1.2

see next page →

Specifications and dimensions are for reference only and subject to change without notice. Please confirm the latest specifications before ordering.

PSC-SR Adapter Handle-R/LX

› Main spare parts

Size	ScrewO	-ring	Key
25	113.040.12	182.061.16	241.030.63
32	113.050.122		41.040.70
40	113.060.122		41.050.80

The insert need to be ordered seperately. Other accessories are included in the order

The sapare parts can be ordered separately. Please inquire on demand

› Naming And Coding Rules

PSC50 -- SR40 R X -- 045 050

- 050: Axial length L1
- 045: BAWS
- X: X 45°
- R: L Left R Right
- SR40: Serrated type size
- PSC50: Serrated type size

PSC-SR Adapter Handle-R/LX-T

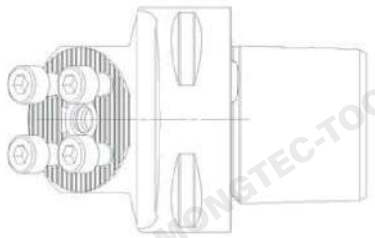

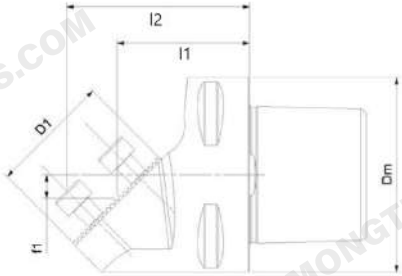

Technical parameters

Unit：mm

Ordering code	Dm	Dw	F1	L1	L2	BAWS	m (kg)
PSC40-SR32-RX-045-T4	03	21		22	33	45°	0.3
PSC40-SR32-LX-045-T	40	32	12	23	3	45°	0.3

› Main spare parts

Size	ScrewO	-ring	Key
32	113.050.121	82.061.162	41.040.70

The insert need to be ordered seperately. Other accessories are included in the order

The sapare parts can be ordered separately. Please inquire on demand

› Naming And Coding Rules

PSC40 -- SR32 R X -- 045 T

- T Short length
- BAWS
- X 45°
- L Left R Right
- Serrated type size
- Serrated type size

PSC-SR Adapter Handle-R/LX-L1

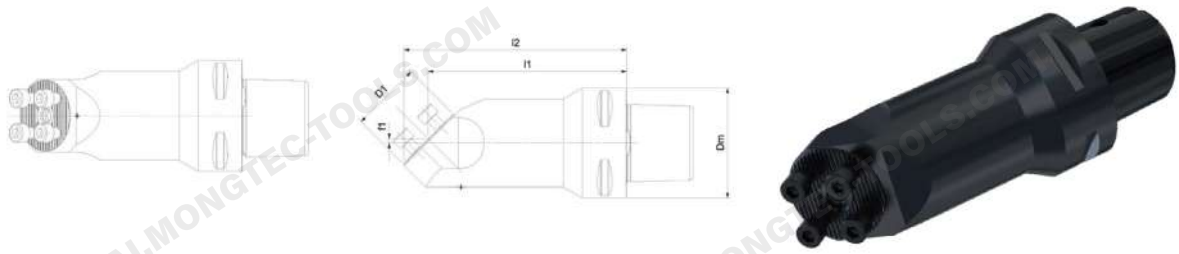

› Technical parameters

Unit：mm

Ordering code	Dm	D1	l2(LPR)	l1(LF)	f1(WF)	m (kg)
PSC50-SR32-RX-045-L15	03	21	01	90	21	.1
PSC63-SR32-RX-045-L16	33	21	11	1002		1.7
PSC63-SR40-RX-045-L16	34	01	14	1005		1.8
PSC80-SR40-RX-045-L18	04	01	49	1355		3.6
PSC63-SR40-47-NG	26	34	04	71	61	.1

› Main spare parts

Size	Screw	O-ring	Key
32	113.050.12	182.061.16	241.040.70
40	113.060.122		41.050.80

The insert need to be ordered seperately. Other accessories are included in the order

The sapare parts can be ordered separately. Please inquire on demand

› Naming And Coding Rules

PSC50 -- SR32 R X -- 045 L1

- L1 Extended length
- BAWS
- X 45°
- L Left RRight
- Serrated type size
- Serrated type size

Specifications and dimensions are for reference only and subject to change without notice. Please confirm the latest specifications before ordering.

PSC-SR70 Adapter Handle-R/LF

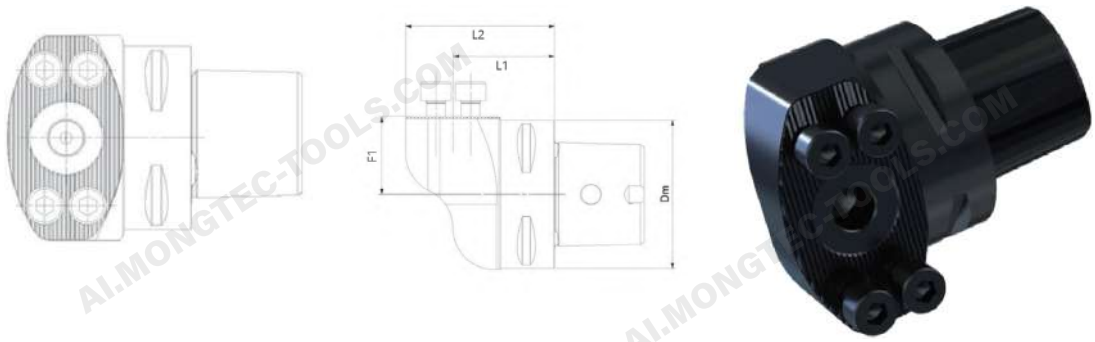

› Technical parameters

Unit：mm

Ordering code	Dm	F1	L1	L2	m (kg)
PSC50-SR70-RF-043	50	33	43	63	1.3
PSC50-SR70-LF-043	50	33	43	63	1.3
PSC63-SR70-RF-043	63	33	43	63	1.6
PSC63-SR70-LF-043	63	33	43	63	1.6
PSC80-SR70-RF-051	80	41	51	71	3.1
PSC80-SR70-LF-051	80	41	51	71	3.1
PSC100-SR70-RF-070	100	51	70	90	6.1
PSC100-SR70-LF-070	100	51	70	90	6.1

› Main spare parts

Size	Screw	O-ring	Key
SR70	113.080.16	182.121.16	241.060.90

The insert need to be ordered seperately. Other accessories are included in the order

The sapare parts can be ordered separately. Please inquire on demand

› Naming And Coding Rules

PSC50 - SR70 - R F - 043

- 043: Axial length L1
- F: F 90°
- R: L Left R Right
- SR70: Serrated type size
- PSC50: PSC size

PSC-SR70 Adapter Handle-R/LG

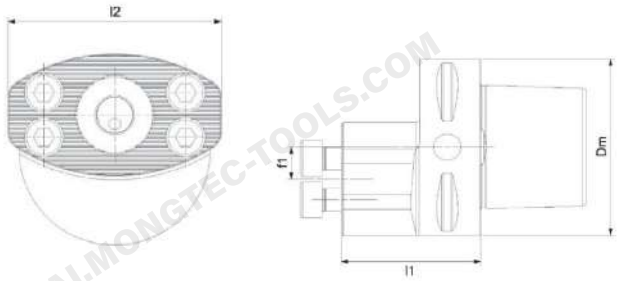

› Technical parameters

Unit：mm

Ordering code	Dm	l1（LF)	f1(WF)	l2(OAH)	m (kg)
PSC50-SR70-RG-050	50	50	11	70	0.9
PSC50-SR70-LG-050	50	50	11	70	0.9
PSC63-SR70-RG-050	63	50	11	70	1.2
PSC63-SR70-LG-050	63	50	11	70	1.2
PSC80-SR70-RG-090	80	90	35	70	2.9
PSC80-SR70-LG-090	80	90	35	70	2.9
PSC100-SR70-RG-100	100	100	48	70	5.1
PSC100-SR70-LG-100	100	100	48	70	5.1

› Main spare parts

Size	ScrewO	-ring	Key
SR70	113.080.16	182.121.162	41.060.90

The insert need to be ordered seperately. Other accessories are included in the order

The sapare parts can be ordered separately. Please inquire on demand

› Naming And Coding Rules

PSC50 -- SR70 R G - 050

- 050: Axial length L1
- G: G 0°
- R: L Left R Right
- SR70: Serrated type size
- PSC50: Serrated type size

Specifications and dimensions are for reference only and subject to change without notice. Please confirm the latest specifications before ordering.

PSC-SR70 Adapter Handle-R/LX

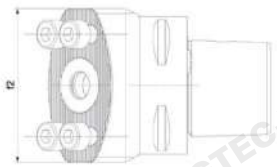

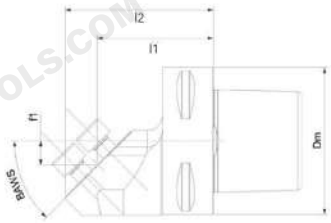

› Technical parameters

Unit : mm

Ordering code	Dm	F1	F2	L1	L2	BAWS	m (kg)
PSC50-SR70-RX-045-050	50	6	70.5	50	65	45°	0.9
PSC50-SR70-LX-045-050	50	6	70.5	50	65	45°	0.9
PSC50-SR70-RX-135-060	50	23	70.5	60	82	135°	1.5
PSC50-SR70-LX-135-060	50	23	70.5	60	82	135°	1.5
PSC63-SR70-RX-045-050	63	10	70.5	50	64	45°	1.3
PSC63-SR70-LX-045-050	63	10	70.5	50	64	45°	1.3
PSC63-SR70-RX-045-100	63	5	70.5	100	113	45°	2.6
PSC63-SR70-RX-005-100	63	11	70	100	102	5°	1.7
PSC80-SR70-RX-045-090	80	18	80	90	104	45°	3.4
PSC80-SR70-LX-045-090	80	18	80	90	104	45°	3.4

› Main spare parts

Size	ScrewO	-ring	Key
SR70	113.080.16	182.121.162	41.060.90

The insert need to be ordered seperately. Other accessories are included in the order

The sapare parts can be ordered separately. Please inquire on demand

› Naming And Coding Rules

PSC50 -- SR70 R X - 045 - 050

- 050: Axial length L1
- 045: BAWS
- X: X 45°
- R: L Left R Right
- SR70: Serrated type size
- PSC50: Serrated type size

Specifications and dimensions are for reference only and subject to change without notice. Please confirm the latest specifications before ordering.

PSC-SR Face Slotting Adapter

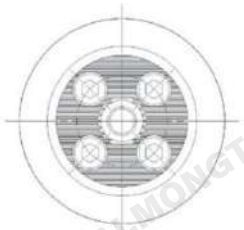

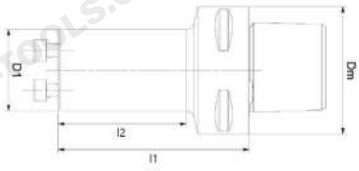

› Technical parameters

Unit：mm

Ordering code	Dm	D1(DOCN-WS)D	2(BD1)	l2(LB1)	l1(LF)	m (kg)
PSC32-SR16-045	32	16	16	26	45	0.2
PSC32-SR20-050	32	20	20	32	50	0.2
PSC32-SR25-064	32	25	25	46	64	0.3
PSC32-SR32-037	32	32	32	37	37	0.2
PSC32-SR32-053	32	32	32	53	53	0.3
PSC40-SR16-048	40	16	16	23	48	0.3
PSC40-SR20-058	40	20	20	34	58	0.3
PSC40-SR25-064	40	25	25	42	64	0.4
PSC40-SR32-074	40	32	32	51	74	0.6
PSC40-SR40-053	40	40	40	40	53	0.6
PSC40-SR40-073	40	40	40	73	73	0.8
PSC50-SR16-052	50	16	16	28	52	0.5
PSC50-SR20-059	50	20	20	33	59	0.5
PSC50-SR25-067	50	25	25	41	67	0.6
PSC50-SR32-075	50	32	32	48	75	0.9
PSC50-SR40-094	50	40	40	72	94	1.1
PSC50-SR50-090	50	50	50	90	90	1.3
PSC63-SR16-056	63	16	16	28	56	0.8
PSC63-SR20-068	63	20	20	40	67	0.8
PSC63-SR25-082	63	25	25	55	82	0.8

see next page →

Specifications and dimensions are for reference only and subject to change without notice. Please confirm the latest specifications before ordering.

PSC-SR Face Slotting Adapter

› Technical parameters

Unit：mm

Ordering code	Dm	D1(DOCN-WS)D	2(BD1)	l2(LB1)	l1(LF)	m (kg)
PSC63-SR32-081	63	32	32	51	81	1.1
PSC63-SR40-092	63	40	40	63	92	1.3
PSC63-SR50-114	63	50	50	87	114	2.3
PSC63-SR60-137	63	60	60	114	137	3.3
PSC80-SR40-105	80	40	40	73	105	2.3
PSC80-SR50-115	80	50	50	85	115	3.3
PSC80-SR60-140	80	60	60	111	140	3.3

› Main spare parts

Size	ScrewO	-ring	Key
16	113.025.08	-	241.020.50
20	113.030.10		241.025.56
25	113.040.12	182.061.16	241.030.63
32	113.050.12		241.040.70
40	113.060.12		241.050.80
50	113.080.16	182.081.162	41.060.90
60	113.080.16	182.121.162	41.060.90

The insert need to be ordered seperately. Other accessories are included in the order

The sapare parts can be ordered separately. Please inquire on demand

› Naming And Coding Rules

PSC32 -- SR16 045

- 045: Axial length L1
- SR16: Serrated type size
- PSC32: PSC size

PSC-SR Face Slotting Adapter-R/L

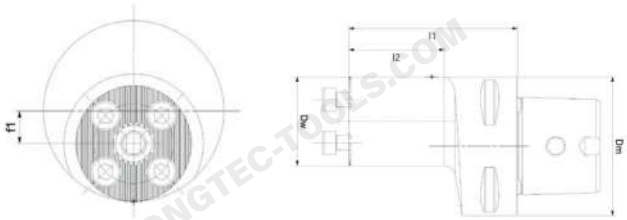

› Technical parameters

Unit：mm

Ordering code	Dm	Dw	D1	F1	L1	L2	m (kg)
PSC32-SR16-033R	32	16	16	8	33	12	0.1
PSC32-SR16-033L	32	16	16	8	33	12	0.1
PSC32-SR20-040R	32	20	20	6	40	20	0.1
PSC32-SR20-040L	32	20	20	6	40	20	0.1
PSC32-SR25-044R	32	25	25	3	44	25	0.2
PSC32-SR25-044L	32	25	25	3	44	25	0.2
PSC40-SR16-041R	40	16	16	12	41	12	0.3
PSC40-SR16-041L	40	16	16	12	41	12	0.3
PSC40-SR20-047R	40	20	20	10	47	20	0.3
PSC40-SR20-047L	40	20	20	10	47	20	0.3
PSC40-SR25-051R	40	25	25	7	51	25	0.4
PSC40-SR25-051L	40	25	25	7	51	25	0.4
PSC40-SR32-056R	40	32	32	4	56	32	0.5
PSC40-SR32-056L	40	32	32	4	56	32	0.5
PSC50-SR16-040R	50	16	16	12	40	12	0.5
PSC50-SR20-050R	50	20	20	15	50	20	0.5
PSC50-SR25-054R	50	25	25	12	54	25	0.6
PSC50-SR25-054L	50	25	25	12	54	25	0.6
PSC50-SR32-061R	50	32	32	9	61	32	0.7
PSC50-SR32-061L	50	32	32	9	61	32	0.7

see next page →

Specifications and dimensions are for reference only and subject to change without notice. Please confirm the latest specifications before ordering.

PSC-SR Face Slotting Adapter-R/L

› Technical parameters

Unit：mm

Ordering code	Dm	Dw	D1	F1	L1	L2	m (kg)
PSC50-SR40-075R	50	40	40	57	54	80	.9
PSC50-SR40-075L	50	40	40	57	54	80	.9
PSC63-SR16-045R	63	16	16	23	45	12	0.8
PSC63-SR20-052R	63	20	20	21	52	20	0.8
PSC63-SR25-056R	63	25	25	19	56	25	0.8
PSC63-SR25-056L	63	25	25	19	56	25	0.8
PSC63-SR32-066R	63	32	32	15	66	32	1.1
PSC63-SR32-066L	63	32	32	15	66	32	1.1
PSC63-SR40-080R	63	40	40	11	80	48	1.3
PSC63-SR40-080L	63	40	40	11	80	48	1.3
PSC63-SR50-097R40	63	40	50	12	976	81	.7
PSC63-SR50-097L40	63	40	50	12	976	81	.7
PSC63-SR60-112R40	63	40	60	10	112	88	2.4
PSC63-SR60-112L40	63	40	60	10	112	88	2.4
PSC80-SR40-081R	80	40	40	20	81	81	2.3
PSC80-SR40-081L	80	40	40	20	81	81	2.3
PSC80-SR50-102R40	80	40	50	20	102	68	2.3
PSC80-SR50-102L40	80	40	50	20	102	68	2.3
PSC80-SR60-119R40	80	40	60	20	119	88	3.3
PSC80-SR60-119L40	80	40	60	20	119	88	3.3

see next page →

Specifications and dimensions are for reference only and subject to change without notice. Please confirm the latest specifications before ordering.

PSC-SR Face Slotting Adapter-R/L

› Main spare parts

Size	ScrewO	-ring	Key
16	113.025.08	-	241.020.50
20	113.030.10		241.025.56
25	113.040.12	182.061.16	241.030.63
32	113.050.12		241.040.70
40	113.060.12		241.050.80
50	113.060.12		241.050.80
60	113.060.12		241.050.80

The insert need to be ordered seperately. Other accessories are included in the order

The sapare parts can be ordered separately. Please inquire on demand

› Naming And Coding Rules

PSC63 -- SR50 097 - R 40

- 40: DW
- R: L Left R Right
- 097: Axial length L1
- SR50: D1 Serrated type size
- PSC63: PSC size

Tool Holder Adaptor Naming And Coding Rules

PSC63	-	ASHR	-	122	-	25
01		02		03		04

01 Coupling Type	
PSC	32
	40
	50
	63
	80

02 Production Type	
ASHL	General Purpose 0° Left-Hand Adaptor
ASHR	General Purpose 0°Right-Hand Adaptor
ASHA	General Purpose 90° Adaptor
ASHS	General Purpose 0° Both-sides Adaptor
ASHTR/L	General Purpose 45° Adaptor
ASHR/L45	General Purpose 0° tri-sides Adaptor

03 Length

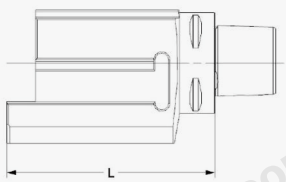

04 Height

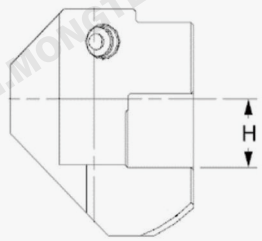

Specifications and dimensions are for reference only and subject to change without notice. Please confirm the latest specifications before ordering.

General Purpose 0° Adaptor

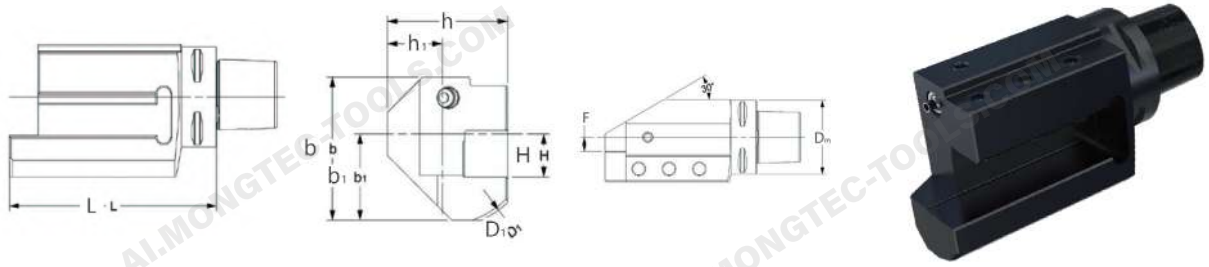

› Technical parameters

Unit：mm

PSC size	Square size	Ordering code	Dm	LF		Hb		hD	1h	1b	1	m (kg)	Screw
PSC50	20X20	PSC50-ASHR-095-20	50	95	10	20	55.5	69	85	37	30	1.69	251.080.20
PSC50	20X20	PSC50-ASHL-095-20	50	95	10	20	55.5	69	85	37	30	1.69	251.080.20
PSC632	0X20	PSC63-ASHR-105-20	63	1051	0	20	63.5	69	85	37	30	2.39	251.080.20
PSC632	0X20	PSC63-ASHL-105-20	63	1051	0	20	63.5	69	85	37	30	2.39	251.080.20
PSC632	5X25P	SC63-ASHR-122-25	63	122	13	25	70	78	100	46	38	3.17	251.100.18
PSC632	5X25P	SC63-ASHL-122-25	63	122	13	25	70	78	100	46	38	3.17	251.100.18
PSC80	25X25P	SC80-ASHR-122-25	80	122	15	25	80	86	1034	64	0	4.062	51.100.20
PSC80	25X25P	SC80-ASHL-122-25	80	122	15	25	80	86	1034	64	0	4.062	51.100.20
PSC80	32X32P	SC80-ASHR-140-328	0	140	83	28	0	95	110	55	40	5.13	251.120.30
PSC80	32X32P	SC80-ASHL-140-32	80	140	83	28	0	95	110	55	40	5.13	251.120.30

see next page →

Specifications and dimensions are for reference only and subject to change without notice. Please confirm the latest specifications before ordering.

General Purpose 90° Adaptor

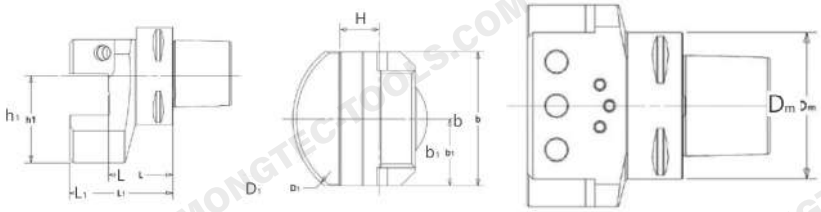

› Technical parameters

Unit：mm

PSC size	Square size	Ordering code	Dm	L1	L	H	b	D1	h1	b1	m (kg)	Screw
PSC50	20X20	PSC50-ASHA-065-20	50	65	45	20	64	85	37	32	1.4	251.120.20
PSC63	20X20	PSC63-ASHA-070-20	63	70	50	20	64	85	37	32	1.8	251.120.20
PSC63	25X25	PSC63-ASHA-080-25	63	80	55	25	76	100	46	38	2.4	251.120.20
PSC80	25X25	PSC80-ASHA-075-25	80	75	50	25	80	103	46	38	3.1	251.120.20
PSC80	32X32	PSC80-ASHA-085-32	80	85	53	32	110	142	65	55	4.4	251.120.20

Specifications and dimensions are for reference only and subject to change without notice. Please confirm the latest specifications before ordering.

General Purpose 0° Both-sides Adaptor

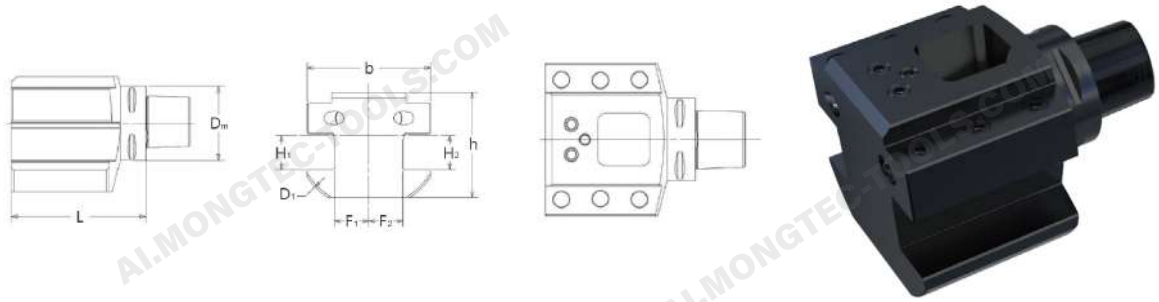

› Technical parameters

Unit：mm

PSC size	Square size	Ordering code	Dm	L1	L2	F1	F2	H1	H2	b	h	D1	m (kg)	Screw
PSC63	25X25	PSC63-ASHS-122-25	63	122	122	20	20	25	25	90	78	114	4.5	251.120.20
PSC80	25X25	PSC80-ASHS-122-25	80	122	122	30	30	25	25	110	75	128	5.9	251.120.20

Specifications and dimensions are for reference only and subject to change without notice. Please confirm the latest specifications before ordering.

General Purpose 0° tri-sides Adaptor

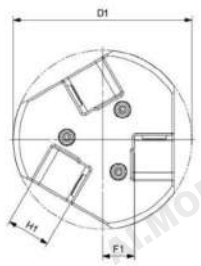

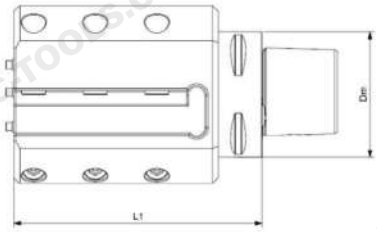

› Technical parameters

Unit：mm

Ordering code	Dm	D1	L1	H1	F1	m (kg)
PSC50-ASHTR-36123-20	50	90	123	20	16	3.4
PSC50-ASHTL-36123-20	50	90	123	20	16	3.4
PSC63-ASHTR-36125-20	63	90	125	20	16	3.8
PSC63-ASHTL-36125-20	63	90	125	20	16	3.8
PSC80-ASHTR-45150-32	80	120	150	32	20	7.5
PSC80-ASHTL-45150-32	80	120	150	32	20	7.5

Specifications and dimensions are for reference only and subject to change without notice. Please confirm the latest specifications before ordering.

General Purpose 45° Adaptor

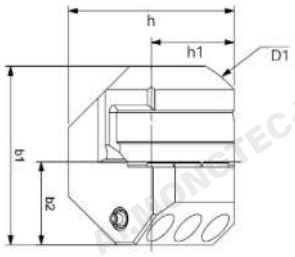

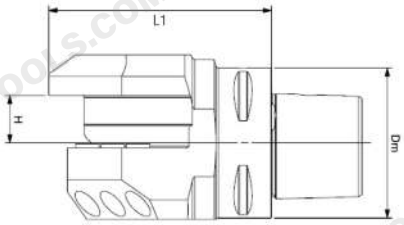

› Technical parameters

Unit：mm

Ordering code	Dm	L1	H	h	h1	b1	b2	D1	m (kg)
PSC50-ASHR45-085-20	50	85	20	64	32	69	37	85	1.6
PSC50-ASHL45-085-20	50	85	20	64	32	69	37	85	1.6
PSC63-ASHR45-095-20	63	95	20	64	32	69	37	85	2.2
PSC63-ASHL45-095-20	63	95	20	64	32	69	37	85	2.2
PSC63-ASHR45-114-25	63	114	25	72	36	78	46	100	2.8
PSC63-ASHL45-114-25	63	114	25	72	36	78	46	100	2.8

Specifications and dimensions are for reference only and subject to change without notice. Please confirm the latest specifications before ordering.

PSC Blank

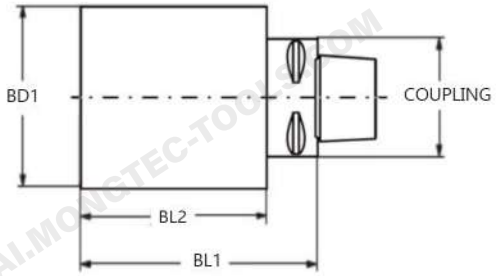

› Technical parameters

Unit : mm

PSC size	Ordering code	BD1	BL1	Stock
PSC32	BLPSC32A040110M4	0	110	▲
	BLPSC32A050110M5	0	110	●
	BLPSC32A050125M	50	125	▲
	BLPSC32A070060M7	0	60	▲
	BLPSC32A090070M9	0	70	▲
PSC40	BLPSC40A040095M	40	95	▲
	BLPSC40A060130M6	0	130	●
	BLPSC40A060165M	60	165	▲
	BLPSC40A080075M	80	75	▲
	BLPSC40A100085M	100	85	▲
PSC50	BLPSC50A050125M	50	125	●
	BLPSC50A075175M	75	175	●
	BLPSC50A090080M9	0	80	▲
	BLPSC50A110090M	110	90	▲
	BLPSC50A110130M	110	130	▲

see next page →

Specifications and dimensions are for reference only and subject to change without notice. Please confirm the latest specifications before ordering.

PSC Blank

› Technical parameters

Unit : mm

PSC size	Ordering code	BD1	BL1	Stock
PSC63	BLPSC63A072120M	72	120	●
	BLPSC63A075195M	75	195	●
	BLPSC63A100080M	100	80	●
	BLPSC63A110085M	110	85	▲
	BLPSC63A110180M	110	180	▲
	BLPSC63A130095M	130	95	●
PSC80	BLPSC80A080200M	80	200	▲
	BLPSC80A120095M	120	95	▲
	BLPSC80A120160M	120	160	●
	BLPSC80A130090M	130	90	●
PSC100	BLPSC100A100200M	100	200	▲
	BLPSC100A160120M	160	120	▲
	BLPSC100A150150M	150	150	▲

PSC blank have a 42-46HR C hardness front, which allows machining of special shapes

Specifications and dimensions are for reference only and subject to change without notice. Please confirm the latest specifications before ordering.

PSC Clamping Unit Naming And Coding Rules

PSC40	-	R	CUSA	-	24	043	M
01		02	03		04	05	06

01 Coupling Type	
PSC	32
	40
	50
	63
	80
	80X

02 Hand of Tool	
L	Left
R	Right
N	Null

03 Production Type	
CUSA	General Purpose Receiver
CVDI	VDI Receiver
CSQUA	Horizontal Lathe Receiver
CSQIR	Square Shank Internal Receiver
CVDI	Center Pull Stud Clamping Receiver
CHYD	Hydraulic Actuated Receiver

04 l1z Size

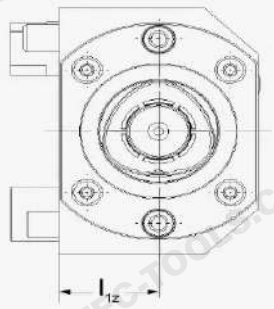

05 l1x Size

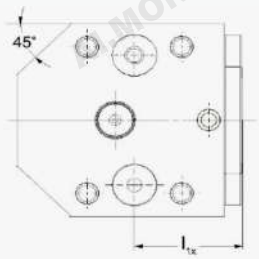

06 Format	
MS	tandard

Specifications and dimensions are for reference only and subject to change without notice. Please confirm the latest specifications before ordering.

CUSA

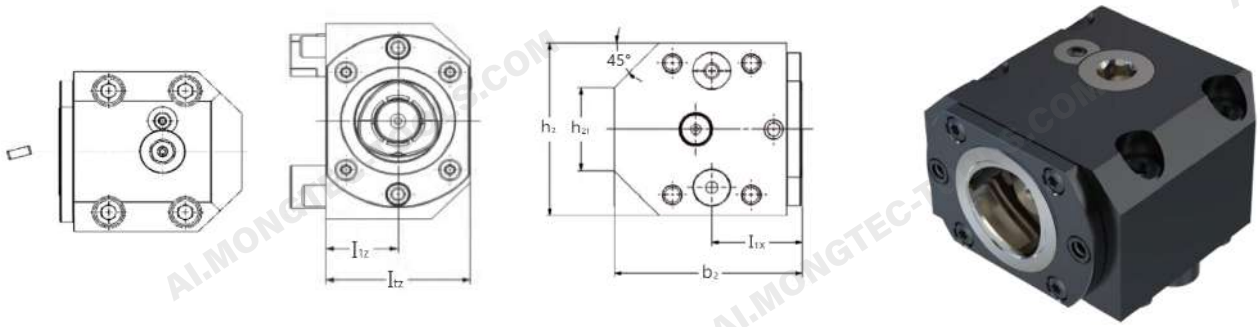

› Technical parameters

Unit：mm

PSC size	Ordering code	b_2	h_2	h_{21}	l_{1x}	l_{1z}	l_{tz}	m (kg)
PSC32	PSC32-RCUSA-19039	73	54	30	39	19	38	1.30
PSC32	PSC32-LCUSA-19039	73	54	30	39	19	38	1.30
PSC40	PSC40-RCUSA-24043	86	77	38	43	24	48	2.26
PSC40	PSC40-LCUSA-24043	86	77	38	43	24	48	2.26
PSC50	PSC50-RCUSA-32048	100	92	44	48	32	64	3.74
PSC50	PSC50-LCUSA-32048	100	92	44	48	32	64	3.74
PSC63	PSC63-RCUSA-42060	122	105	37	60	42	84	710
PSC63	PSC63-LCUSA-42060	122	105	37	60	42	84	710
PSC80	PSC80-RCUSA-50088	146	133	133	88	50	100	13.25
PSC80	PSC80-LCUSA-50088	146	133	133	88	50	100	13.25

Specifications and dimensions are for reference only and subject to change without notice. Please confirm the latest specifications before ordering.

Clamping device R \ L Rusa application design description

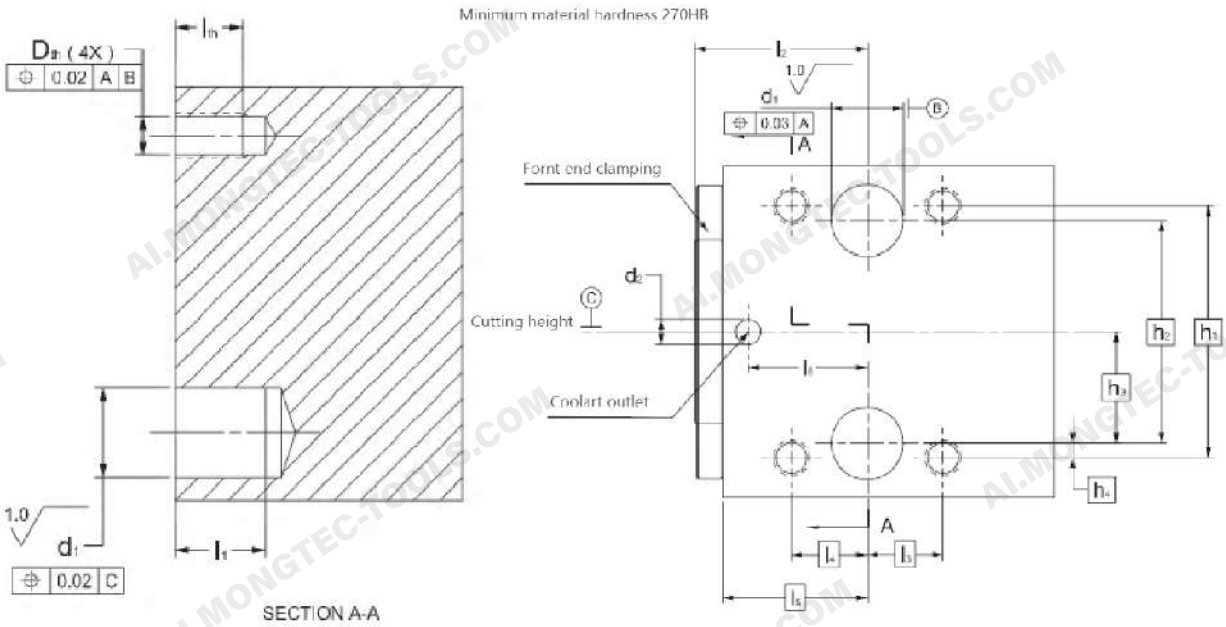

› Technical parameters

Unit：mm

Clamping device	d1 (H7)	d2	h1	h2	h3	h4	l1 (min)	l2	l3	l4	l5	l6	lth (min)	Dth
PSC32R\LCUSA19039	12	54	23	9	19.51	.5	8.53	91	91	9	33.52	87	.5	M6
PSC40R\LCUSA24043	16	76	05	52	752	.5	11	43	19	19	36.53	01	1M	8
PSC50R\LCUSA32048	20	77	06	23	14		12	48	21	21	39.53	31	3M	10
PSC63R\LCUSA42060	25	10	82	71	35.55	.5	20	60	24.5	24.5	50.54	11	2M	10
PSC80R\LCUSA50088	32	11	110	92	46	92	08	84	34	37	66	3	14.5M	12

Specifications and dimensions are for reference only and subject to change without notice. Please confirm the latest specifications before ordering.

VDI External Receiver

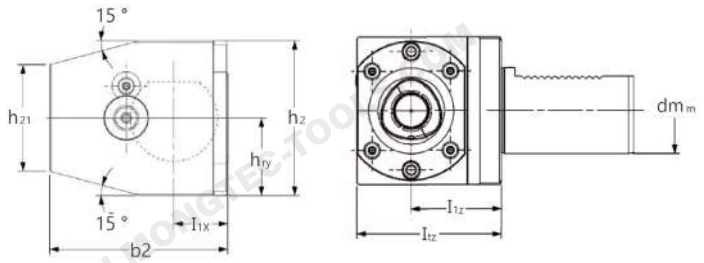

› Technical parameters

Unit : mm

VDI size	PSC size	Ordering code	b2	hryh	2	h21	l1xl	1z	ltzm	(kg)
30	PSC32	PSC32-RCVDI30-41020M7	43	0	57	38	20	41	60	2.1
30	PSC32	PSC32-LCVDI30-41020M7	43	0	57	38	20	41	60	2.1
30	PSC32	PSC32-RCVDI30-41030M7	33	0	57	41	30	41	60	2.2
30	PSC32	PSC32-LCVDI30-41030M7	33	0	57	41	30	41	60	2.2
40	PSC40	PSC40-RCVDI40-51030M8	63	87	55	43	0	51	75	3.2
40	PSC40	PSC40-LCVDI40-51030M8	63	87	55	43	0	51	75	3.2
50	PSC40	PSC40-RCVDI50-51040M8	63	87	56	0	40	51	75	3.2
50	PSC40	PSC40-LCVDI50-51040M8	63	87	56	0	40	51	75	3.2
40	PSC50	PSC50-RCVDI40-53030M9	94	18	2	47	30	53	85	5.7
40	PSC50	PSC50-LCVDI40-53030M9	94	18	24	73	0	53	85	5.7
40	PSC50	PSC50-RCVDI40-53040M9	94	18	25	34	0	53	85	5.7
40	PSC50	PSC50-LCVDI40-53040M9	94	18	25	34	0	53	85	5.7
50	PSC50	PSC50-RCVDI50-41030M8	64	38	66	63	0	41	65	5.7
50	PSC50	PSC50-LCVDI50-41030M8	64	38	66	63	0	41	65	5.7
50	PSC50	PSC50-RCVDI50-53030M9	94	38	65	93	0	53	85	5.7
50	PSC50	PSC50-LCVDI50-53030M9	94	38	65	93	0	53	85	5.7
50	PSC50	PSC50-RCVDI50-53040M9	94	38	66	54	0	53	85	5.7
50	PSC50	PSC50-LCVDI50-53040M9	94	38	66	54	0	53	85	5.7
60	PSC50	PSC50-RCVDI60-43040M9	95	39	47	64	0	43	75	5.7
60	PSC50	PSC50-LCVDI60-43040M9	95	39	47	64	0	43	75	5.7
60	PSC63	PSC63-RCVDI60-53040M	122	53	1057	0	40	53	95	6
60	PSC63	PSC63-LCVDI60-53040M	122	53	1057	0	40	53	95	6

Specifications and dimensions are for reference only and subject to change without notice. Please confirm the latest specifications before ordering.

VDI Internal Receiver

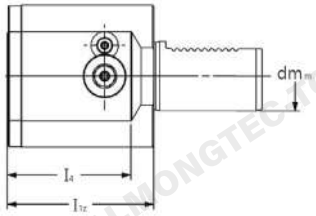

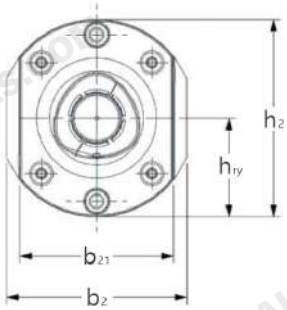

› Technical parameters

Unit：mm

VDI size	PSC size	Ordering code	b21	b2	hry	h2	l1z	l4	m (kg)
30	PSC32	PSC32-RCVDI30-00060M	38	50	34	61	60	44	1
30	PSC32	PSC32-LCVDI30-00060M	38	50	34	61	60	44	1
40	PSC40	PSC40-RCVDI40-00075M	48	75	41	75	75	53	2.2
40	PSC40	PSC40-LCVDI40-00075M	48	75	41	75	75	53	2.2
50	PSC40	PSC40-RCVDI50-00065M	64	75	41	82	85	72	3.2
50	PSC40	PSC40-LCVDI50-00065M	64	75	41	82	85	72	3.2
40	PSC50	PSC50-RCVDI40-00085M	48	70	49	83	65	39	2.2
40	PSC50	PSC50-LCVDI40-00085M	48	70	49	83	65	39	2.2
50	PSC50	PSC50-RCVDI50-00085M	64	83	49	91	85	62	3.2
50	PSC50	PSC50-LCVDI50-00085M	64	83	49	91	85	62	3.2
60	PSC50	PSC50-RCVDI60-00075M	64	80	58	100	75	56	5.7
60	PSC50	PSC50-LCVDI60-00075M	64	80	58	100	75	56	5.7
60	PSC63	PSC63-RCVDI60-00095M	84	84	58	111	95	50	6.1
60	PSC63	PSC63-LCVDI60-00095M	84	84	58	111	95	50	6.1

Specifications and dimensions are for reference only and subject to change without notice. Please confirm the latest specifications before ordering.

MONGTEC
mongtec-tools.com

VDI Machine Tool Interface Center Pull Stud Clamping

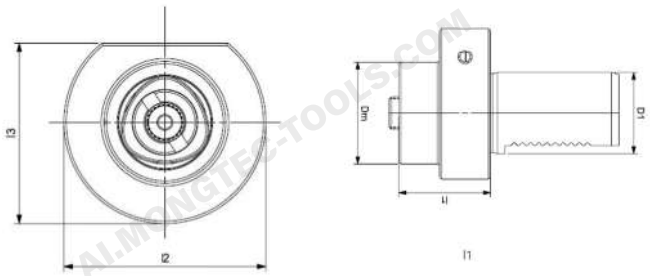

› Technical parameters

Unit : mm

Size	PSC size	Ordering code	Dm	D1	l1	l2	l3	m (kg)
30	PSC32	PSC32-NCVDI30-035M	32	30	35	68	62	0.8
30	PSC40	PSC40-NCVDI30-060M	40	30	60	68	62	0.9
40	PSC32	PSC32-NCVDI40-030M	32	40	30	83	74	1.4
40	PSC40	PSC40-NCVDI40-030M	40	40	30	83	74	1.5
40	PSC50	PSC50-NCVDI40-045M	50	40	45	83	74	1.6
40	PSC63	PSC63-NCVDI40-090M	63	40	90	83	74	2.5
50	PSC32	PSC32-NCVDI50-035M	32	50	35	98	84	2.4
50	PSC40	PSC40-NCVDI50-040M	40	50	40	98	84	2.5
50	PSC50	PSC50-NCVDI50-050M	50	50	50	98	84	2.6
50	PSC63	PSC63-NCVDI50-070M	63	50	70	98	84	3.1
50	PSC80	PSC80-NCVDI50-100M	80	50	100	98	90	4.5
60	PSC50	PSC50-NCVDI60-050M	50	60	50	123	104	4.3
60	PSC63	PSC63-NCVDI60-050M	63	60	50	123	104	4.2
60	PSC80	PSC80-NCVDI60-085M	80	60	85	123	104	5.7

PSC size	Thereaded sleeve	Pull stud	Key
PSC32	SRLM1815155123	SCFM1215D16050	241.080.00
PSC40	SRLM2215175143	SCFM1415D19057	241.080.00
PSC50	SRLM2515200163	SCFM1615D22069	241.100.00
PSC63	SRLM3015240203	SCFM2020D27087	241.140.00
PSC80	SRLM3015240203	SCFM2020D27087	241.140.00

Specifications and dimensions are for reference only and subject to change without notice. Please confirm the latest specifications before ordering.

Horizontal Lathe Receiver

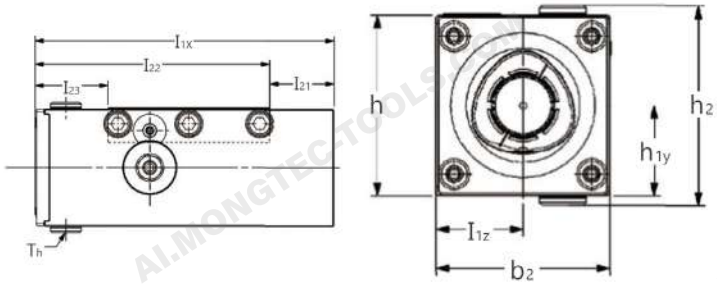

› Technical parameters

Unit：mm

PSC size	Ordering code	b2	h1y	h2	l1xl	1z	l21	l22l	23	Th	m (kg)
PSC32P	SC32-RCSQUA-4038M	38	20	62	95	19	16.5	78.5	25	G1/8	1.3
PSC32P	SC32-LCSQUA-4038M	38	20	62	95	19	16.5	78.5	25	G1/8	1.3
PSC40P	SC40-RCSQUA-5048M	48	25	54	125	24	24	1013	0.5G	1/8	2.3
PSC40P	SC40-LCSQUA-5048M	48	25	54	125	24	24	1013	0.5G	1/8	2.3
PSC50P	SC50-RCSQUA-6464M	64	32	68	145	32	27	1183	6G	1/8	3.2
PSC50P	SC50-LCSQUA-6464M	64	32	68	145	32	27	1183	6G	1/8	3.2

Specifications and dimensions are for reference only and subject to change without notice. Please confirm the latest specifications before ordering.

PSC Square Shank Internal Receiver

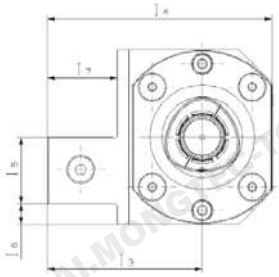

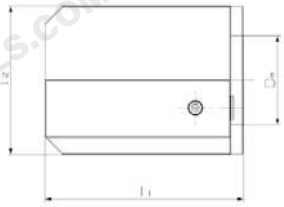

› Technical parameters

Unit：mm

Size	PSC size	Ordering code	Dm	l1	l2	l3	l4	l5	l6	l7	m (kg)
40	PSC40P	SC40-RCSQIR-59-110A	40	1107	75	98	32	51	32	62	.9
40	PSC40P	SC40-LCSQIR-59-110A	40	1107	75	98	32	51	32	62	.9
50	PSC50P	SC50-RCSQIR-77-110A	50	1109	27	7	109	32	14	33	5.1
50	PSC50	PSC50-LCSQIR-77-110A	50	1109	27	7	109	32	14	33	5.1
63	PSC63P	SC63-RCSQIR-93-140A	63	140	105	93	135	40	13	40	11.4
63	PSC63P	SC63-LCSQIR-93-140A	63	140	105	93	135	40	13	40	11.4

Specifications and dimensions are for reference only and subject to change without notice. Please confirm the latest specifications before ordering.

Hydraulic Actuated Receiver-High-pressure cooling

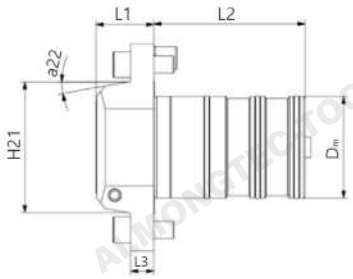

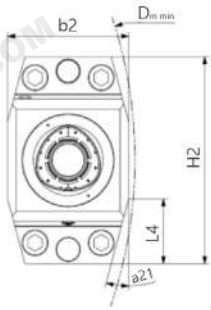

› Technical parameters

Unit：mm

PSC size	Ordering code	b2	Dm	Dm min	H2	H21L	2	L1	L3	L4	a21a	22
PSC40P	SC40-NCHYD-05625M	48	42	2609	25	67	42	51	02	21	5°	11°
PSC50P	SC50-NCHYD-07035M	64	55	300	112	70	88	35	12	30	16°1	0°
PSC63P	SC63-NCHYD-09040M	84	70	400	143	90	105	40	16	45	15°	10°
PSC80P	SC80-NCHYD-11050M	100	90	500	180	110	120	50	18	59	15°	10°

Specifications and dimensions are for reference only and subject to change without notice. Please confirm the latest specifications before ordering.

Hydraulic Actuated Receiver-Low-pressure cooling

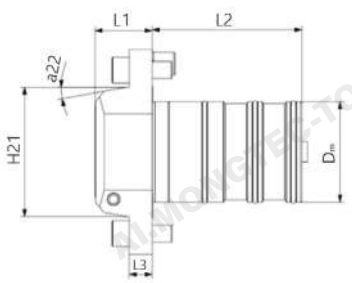

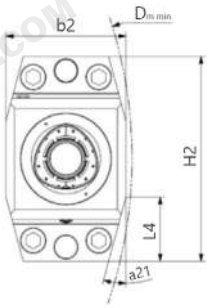

› Technical parameters

Unit：mm

PSC size	Ordering code	b2	Dm	Dm min	H2	H21L	2	L1	L3	L4	a21	a22
PSC63P	SC63-NCLYD-09040M	84	70	400	143	90	1054	01	64	51	5°	10°
PSC80P	SC80-NCLYD-11050M	100	90	500	180	110	1205	01	85	91	5°	10°

Specifications and dimensions are for reference only and subject to change without notice. Please confirm the latest specifications before ordering.

Adaptor Naming And Coding Rules

PSC40	PSC40	080	M
01	02	03	04

01 Coupling Type			
PSC	32	HSK	50
	40		63
	50		80
	63		100
	80	SK	40
	100		50
BT	30		
	40		
	50		

02 Coupling Type					
PSC	32	Arbor	A16A	SLN	6
	40		A22A		8
	50		A27A		10
	63		A32A		12
	80		A40A		14
SLNE	16		A40C		16
	20		A60C		18
	25	ER	16		20
	32		20		25
	40		25		32
	50		32		40
			40		50

03 Length					
25	25mm	65	65mm	125	125mm
30	30mm	70	70mm	135	135mm
32	32mm	75	75mm	140	140mm
33	33mm	80	80mm	145	145mm
35	35mm	85	85mm	150	150mm
40	40mm	90	90mm	155	155mm
45	45mm	95	95mm	175	175mm
50	50mm	100	100mm	185	185mm
55	55mm	110	110mm	200	200mm
60	60mm	120	120mm		

04 Format	
M	Standard
A	Short

Specifications and dimensions are for reference only and subject to change without notice. Please confirm the latest specifications before ordering.

PSC Extension Adaptor

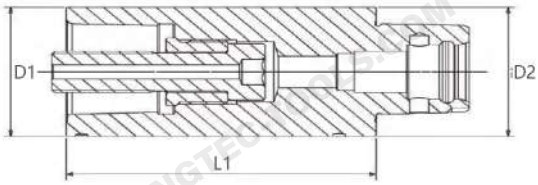

› Technical parameters

Unit：mm

Ordering code	D1	D2	L1	m (kg)
PSC32-PSC32-035A	32	32	35	0.22
PSC32-PSC32-060M	32	32	60	0.36
PSC32-PSC32-080M	32	32	80	0.47
PSC32-PSC32-095M	32	32	95	0.56
PSC40-PSC40-040A	40	40	40	0.4
PSC40-PSC40-060M	40	40	60	0.57
PSC40-PSC40-080M	40	40	80	0.7
PSC40-PSC40-120M	40	40	120	1.11
PSC50-PSC50-050A	50	50	50	0.73
PSC50-PSC50-080M	50	50	80	1.15
PSC50-PSC50-100M	50	50	100	1.38
PSC50-PSC50-150M	50	50	150	2.17
PSC63-PSC63-060A	63	63	60	1.36
PSC63-PSC63-100M	63	63	100	2.26
PSC63-PSC63-140M	63	63	140	3.17
PSC63-PSC63-185M	63	63	185	4.19
PSC80-PSC80-065A	80	80	65	2.41
PSC80-PSC80-100M	80	80	100	3.7
PSC80-PSC80-125M	80	80	125	4.64
PSC80-PSC80-200M	80	80	200	7.47
PSC100-PSC100-140M	100	100	140	7.93
PSC100-PSC100-200M	100	100	200	11.94

see next page →

Specifications and dimensions are for reference only and subject to change without notice. Please confirm the latest specifications before ordering.

PSC Extension Adaptor

› Main spare parts （M）

PSC size	Thereaded sleeve	Pull stud	Key
PSC32	SRLM1815155123	SCFM1215D16050	241.080.00
PSC40	SRLM2215175143	SCFM1415D19057	241.080.00
PSC50	SRLM2515200163	SCFM1615D22069	241.100.00
PSC63	SRLM3015240203	SCFM2020D27087	241.140.00
PSC80	SRLM3015240203	SCFM2020D27087	241.140.00
PSC100	SRLM4820360244	SCFM2420D36130	241.170.00

● The spare parts can be ordered separately. Please inquire on demand

› Main spare parts （A）

Ordering code	Pull stud	Retaining ring	Key
PSC32-PSC32-035A	512.068.01	545.040.02	241.080.00
PSC40-PSC40-040A	512.068.02	545.040.03	241.080.00
PSC50-PSC50-050A	512.068.03	545.040.07	241.080.00
PSC63-PSC63-060A	512.068.04	545.040.08	241.140.00
PSC80-PSC80-065A	512.068.05	545.040.08	241.140.00

Specifications and dimensions are for reference only and subject to change without notice. Please confirm the latest specifications before ordering.

PSC Reduction Adaptor

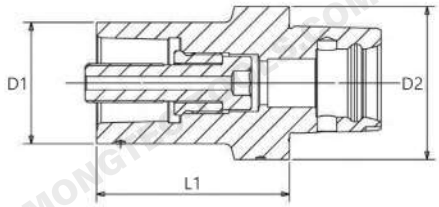

› Technical parameters

Unit : mm

Ordering code	D1	D2	L1	m (kg)
PSC40-PSC32-055M	32	40	55	0.49
PSC40-PSC32-070M	32	40	70	0.59
PSC40-PSC32-120M	32	40	120	0.81
PSC50-PSC32-033A	32	50	33	0.54
PSC50-PSC32-060M	32	50	60	0.68
PSC50-PSC32-120M	32	50	120	0.99
PSC50-PSC32-150M	32	50	150	1.65
PSC50-PSC40-040A	40	50	40	0.59
PSC50-PSC40-065M	40	50	65	0.8
PSC50-PSC40-085M	40	50	85	1.1
PSC50-PSC40-140M	40	50	140	1.46
PSC63-PSC32-032A	32	63	32	0.91
PSC63-PSC32-070M	32	63	70	1.12
PSC63-PSC32-125M	32	63	125	1.43
PSC63-PSC32-185M	32	63	185	2.99
PSC63-PSC40-040A	40	63	40	0.98
PSC63-PSC40-080M	40	63	80	1.32
PSC63-PSC40-145M	40	63	145	1.86
PSC63-PSC40-185M	40	63	185	3.23
PSC63-PSC50-050A	50	63	50	1.11

see next page →

Specifications and dimensions are for reference only and subject to change without notice. Please confirm the latest specifications before ordering.

PSC Reduction Adaptor

› Technical parameters

Unit：mm

Ordering code	D1	D2	L1	m (kg)
PSC63-PSC50-080M	50	63	80	1.53
PSC63-PSC50-110M	50	63	110	2.23
PSC63-PSC50-175M	50	63	175	2.79
PSC80-PSC32-060M	32	80	60	2.07
PSC80-PSC32-135M	32	80	135	2.53
PSC80-PSC40-070M	40	80	70	2.2
PSC80-PSC40-155M	40	80	155	2.97
PSC80-PSC40-200M	40	80	200	5.42
PSC80-PSC50-045A	50	80	45	2
PSC80-PSC50-080M	50	80	80	2.43
PSC80-PSC50-185M	50	80	185	3.88
PSC80-PSC50-200M	50	80	200	5.84
PSC80-PSC63-055A	63	80	55	2.15
PSC80-PSC63-080M	63	80	80	2.65
PSC80-PSC63-120M	63	80	120	4.1
PSC80-PSC63-200M	63	80	200	5.37
PSC100-PSC32-085M	32	100	85	4.15
PSC100-PSC40-090M	40	100	90	4.25
PSC100-PSC50-095M	50	100	95	4.42
PSC100-PSC63-055A	63	100	55	3.7
PSC100-PSC63-095M	63	100	95	4.68
PSC100-PSC63-200M	63	100	200	6.92
PSC100-PSC80-065A	80	100	65	3.92
PSC100-PSC80-100M	80	100	100	5.25
PSC100-PSC80-200M	80	100	200	8.92

see next page →

Specifications and dimensions are for reference only and subject to change without notice. Please confirm the latest specifications before ordering.

PSC Reduction Adaptor

› Main spare parts （M）

PSC size	Thereaded sleeve	Pull stud	Key
PSC32	SRLM1815155123	SCFM1215D16050	241.080.00
PSC40	SRLM2215175143	SCFM1415D19057	241.080.00
PSC50	SRLM2515200163	SCFM1615D22069	241.100.00
PSC63	SRLM3015240203	SCFM2020D27087	241.140.00
PSC80	SRLM3015240203	SCFM2020D27087	241.140.00

- The spare parts can be ordered separately. Please inquire on demand

› Main spare parts （A）

Ordering code	Pull stud	Retaining ring	Key
PSC50-PSC32-033A	512.068.01	545.040.02	241.080.00
PSC50-PSC40-040A	512.068.06	545.040.07	241.080.00
PSC63-PSC32-032A	512.068.01	545.040.02	241.080.00
PSC63-PSC40-040A	512.068.02	545.040.03	241.080.00
PSC63-PSC50-050A	512.068.07	545.040.08	241.100.00
PSC80-PSC50-045A	512.068.08	545.040.08	241.100.00
PSC80-PSC63-055A	512.068.05	545.040.08	241.140.00
PSC100-PSC63-055A	512.068.05	545.040.08	241.140.00
PSC100-PSC80-065A	512.068.05	545.040.08	241.140.00

Specifications and dimensions are for reference only and subject to change without notice. Please confirm the latest specifications before ordering.

PSC Side Lock End Mill Holder

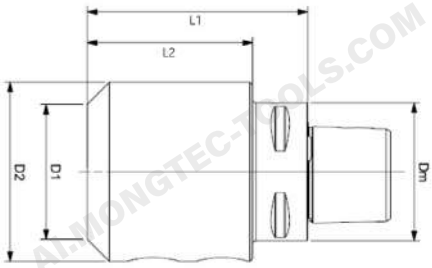

› Technical parameters

Unit : mm

Ordering code	Clamping hole dimensions	Dm	D1	D2	L1	L2	m (kg)
PSC32-SLN-06-045	6	32	17	25	45	29.5	0.30
PSC32-SLN-08-045	8	32	20	28	45	31.0	0.30
PSC32-SLN-10-050	10	32	27	35	50	-	0.40
PSC32-SLN-12-055	12	32	32	42	55	-	0.30
PSC40-SLN-06-050	6	40	17	25	50	29.8	0.40
PSC40-SLN-08-050	8	40	20	28	50	32.5	0.40
PSC40-SLN-10-050	10	40	27	35	50	31.0	0.50
PSC40-SLN-12-055	12	40	32	42	55	-	0.60
PSC40-SLN-14-055	14	40	34	42	55	-	0.60
PSC40-SLN-16-055	16	40	38	48	55	-	0.70
PSC50-SLN-06-050	6	50	17	25	50	30.0	0.62
PSC50-SLN-08-050	8	50	20	28	50	30.0	0.72
PSC50-SLN-10-055	10	50	27	35	55	35.0	0.72
PSC50-SLN-12-060	12	50	32	42	60	40.0	0.90
PSC50-SLN-14-060	14	50	34	44	60	40.0	0.90
PSC50-SLN-16-060	16	50	38	48	60	40.0	1.00
PSC50-SLN-18-060	18	50	40	50	60	-	0.90
PSC50-SLN-20-060	20	50	42	52	60	-	1.00
PSC50-SLN-25-080	25	50	49	65	80	-	1.70
PSC63-SLN-06-055	6	63	17	25	55	32.7	0.90
PSC63-SLN-08-055	8	63	20	28	55	33.1	0.90
PSC63-SLN-10-060	10	63	27	35	60	38.1	1.00
PSC63-SLN-12-060	12	63	32	42	60	37.9	1.10
PSC63-SLN-14-060	14	63	34	44	60	37.9	1.10

see next page →

Specifications and dimensions are for reference only and subject to change without notice. Please confirm the latest specifications before ordering.

PSC Side Lock End Mill Holder

› Technical parameters

Unit : mm

Ordering code	Clamping hole dimensions	Dm	D1	D2	L1	L2	m (kg)
PSC63-SLN-16-065	16	63	38	48	65	43.0	1.10
PSC63-SLN-18-065	18	63	40	50	65	42.7	1.10
PSC63-SLN-20-065	20	63	42	52	65	43.0	1.50
PSC63-SLN-25-080	25	63	49	65	80	-	1.90
PSC63-SLN-32-090	32	63	56	72	90	-	2.40
PSC63-SLN-40-100	40	63	74	90	100	-	3.70
PSC80-SLN-06-070	6	80	17	25	70	40.0	2.10
PSC80-SLN-08-070	8	80	20	28	70	40.0	2.10
PSC80-SLN-10-070	10	80	27	35	70	40.0	2.40
PSC80-SLN-12-070	12	80	32	42	70	40.0	2.40
PSC80-SLN-14-070	14	80	34	44	70	40.0	2.40
PSC80-SLN-16-070	16	80	38	48	70	40.0	2.40
PSC80-SLN-18-070	18	80	40	50	70	40.0	2.40
PSC80-SLN-20-070	20	80	42	52	70	40.0	2.40
PSC80-SLN-25-080	25	80	49	65	80	58.0	2.40
PSC80-SLN-32-080	32	80	56	72	80	58.0	2.90
PSC80-SLN-40-110	40	80	74	90	110	-	4.50
PSC80-SLN-50-120	50	80	84	100	120	-	5.50

Side clamping dimensions	Clamping bolt	Key
6	251.060.10	241.030.63
8	251.080.10	241.040.70
10	251.100.12	241.050.80
12	251.120.16	241.060.90
14	251.120.16	241.060.90
16	251.140.16	241.060.90
18	251.140.16	241.060.90
20	251.160.16	241.080.00
25	251.180.20	241.080.00
32	251.200.20	241.100.00
40	251.200.25	241.100.00
50	251.240.25	241.120.00

Specifications and dimensions are for reference only and subject to change without notice. Please confirm the latest specifications before ordering.

MONGTEC
mongtec-tools.com

PSC Side Lock End Mill Holder-Axial

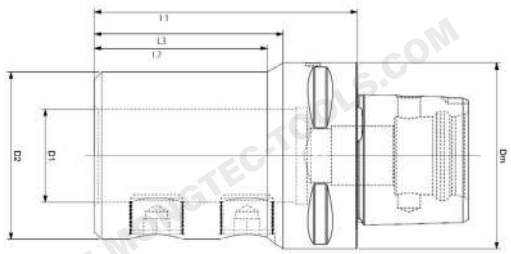

› Technical parameters

Unit : mm

Ordering code	Type	Dm	D1	D2(BD1)	D3	L1(LF)	L2(LB1)	l3	l4	m (kg)
PSC32-SLNE-16-056	1	32	16	36	-	56	56	-	-	0.4
PSC32-SLNE-20-060	1	32	20	40	-	60	60	-	-	0.4
PSC32-SLNE-25-080	1	32	25	45	-	80	80	-	-	0.7
PSC40-SLNE-16-056	7	40	16	36	-	56	32.5	36	-	0.6
PSC40-SLNE-20-060	1	40	20	40	-	60	60	-	-	0.6
PSC40-SLNE-25-077	1	40	25	45	-	77	77	-	-	0.7
PSC40-SLNE-32-088	1	40	32	52	-	61	88	-	-	0.99
PSC50-SLNE-16-065	7	50	16	36	-	65	41.7	45	-	0.71
PSC50-SLNE-20-060	7	50	20	40	-	60	37.7	40	-	0.71
PSC50-SLNE-25-071	7	50	25	45	-	71	46.7	51	-	0.8
PSC50-SLNE-32-075	1	50	32	52	-	75	75	-	-	1
PSC50-SLNE-40-100	1	50	40	65	-	71	100	-	-	1.79
PSC63-SLNE-16-070	7	63	16	36	-	70	43	47.9	-	1.1
PSC63-SLNE-20-070	7	63	20	40	-	70	43.8	48	-	1.1
PSC63-SLNE-25-072	7	63	25	45	-	72	45.8	50	-	1.1
PSC63-SLNE-32-075	7	63	32	52	-	75	49.8	53	-	1.3
PSC63-SLNE-40-085	1	63	40	65	-	85	85	-	-	1.7
PSC80-SLNE-16-080	7	80	16	36	-	80	42	50	-	2.1
PSC80-SLNE-20-080	7	80	20	40	-	80	43.8	49.9	-	2.43

see next page →

Specifications and dimensions are for reference only and subject to change without notice. Please confirm the latest specifications before ordering.

PSC Side Lock End Mill Holder-Axial

› Technical parameters

Unit：mm

Ordering code	Type	Dm	D1	D2(BD1)	D3	L1(LF)	L2(LB1)	l3	l4	m (kg)
PSC80-SLNE-25-085	7	80	25	45	-	85	49.8	55.1	-	2.42
PSC80-SLNE-32-090	7	80	32	52	-	90	53.8	60	-	2.42
PSC80-SLNE-40-095	7	80	40	65	-	95	62.8	65.1	-	2.8
PSC80-SLNE-50-100	7	80	50	75	-	100	68.6	70	-	3.1
PSC100-SLNE-20-090	14	100	20	42	52	90	5	42	54	4.31
PSC100-SLNE-25-105	14	100	25	49	65	105	8	61	69	4.95
PSC100-SLNE-32-110	14	100	32	56	72	110	8	66	74	5.3
PSC100-SLNE-40-115	14	100	40	74	90	115	8	76	79	6.45
PSC100-SLNE-50-120	3	100	50	84	100	120	8	120	-	7.1

PSC size	Side clamping dimensions	Clamping bolt	Key
PSC32-PSC80	16	514.042.04	241.030.63
PSC32-PSC80	20	514.042.04	241.040.70
PSC32-PSC80	25	514.618.38	241.050.80
PSC40-PSC80	32	514.618.38	241.060.90
PSC50-PSC80	40	514.042.06	241.060.90
PSC80	50	514.042.06	241.060.90
PSC100	20	251.160.16	241.040.70
PSC100	25	251.160.16	241.050.80
PSC100	32	514.506.10	241.060.90
PSC100	40	514.506.11	241.060.90
PSC100	50	514.506.61	241.060.90

Specifications and dimensions are for reference only and subject to change without notice. Please confirm the latest specifications before ordering.

PSC with Type ER

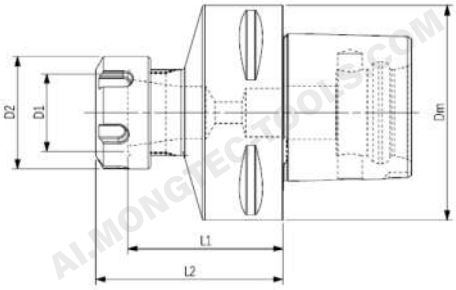

› Technical parameters

Unit：mm

Ordering code	Dm	D1	L1	L2	Locking nut	m (kg)
PSC32-ER16-045	32	32	34.4	45	ER16_M_SP1	0.2
PSC32-ER20-045	32	35	33.5	45	ER20_M_SP1	0.22
PSC40-ER20-052	40	35	40.5	52	ER20_M_SP1	0.37
PSC40-ER25-052	40	42	40	52	ER25_M_SP1	0.42
PSC40-ER32-054	40	50	41	54	ER32_M_SP1	0.46
PSC50-ER20-055	50	35	43.5	55	ER20_M_SP1	0.62
PSC50-ER25-055	50	42	43	55	ER25_M_SP1	0.63
PSC50-ER32-057	50	50	44	57	ER32_M_SP1	0.68
PSC50-ER32-100	50	50	87	100	ER32_M_SP1	1.28
PSC50-ER40-060	50	63	45	60	ER40_M_SP1	0.81
PSC63-ER25-060	63	42	48	60	ER25_M_SP1	1.04
PSC63-ER25-100	63	42	88	100	ER25_M_SP1	1.44
PSC63-ER32-060	63	50	47	60	ER32_M_SP1	1.06
PSC63-ER32-100	63	50	87	100	ER32_M_SP1	1.6
PSC63-ER40-065	63	63	50	65	ER40_M_SP1	1.22
PSC63-ER40-130	63	63	115	130	ER40_M_SP1	2.77
PSC80-ER20-065	80	35	53.5	65	ER20_M_SP1	2.02
PSC80-ER25-070	80	42	58	70	ER25_M_SP1	2.1
PSC80-ER32-070	80	50	57	70	ER32_M_SP1	2.13
PSC80-ER40-070	80	63	55	70	ER40_M_SP1	2.19

Specifications and dimensions are for reference only and subject to change without notice. Please confirm the latest specifications before ordering.

PSC with Type Arbor Adaptor

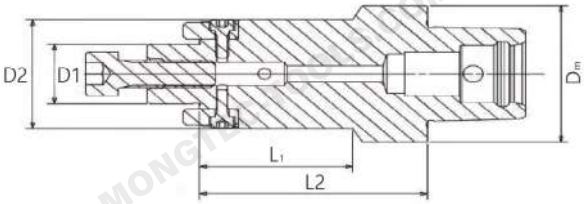

› Technical parameters

Unit : mm

Ordering code	Dm	D1	D2	L1	L2	m (kg)
PSC32-A16A-030M	32	16	32	15	30	0.25
PSC40-A16A-032M	40	16	32	10	32	0.38
PSC40-A16A-055M	40	16	32	33	55	0.4
PSC40-A22A-025M	40	22	40	-	25	0.4
PSC40-A22A-055M	40	22	40	25	55	0.6
PSC50-A16A-035M	50	16	32	10	35	0.6
PSC50-A16A-070M	50	16	32	45	70	0.7
PSC50-A22A-025M	50	22	50	-	25	0.62
PSC50-A22A-070M	50	22	40	47	70	0.9
PSC50-A27A-025M	50	27	50	_	25	0.68
PSC50-A32A-040M	50	32	63	20	40	1.14
PSC63-A16A-040M	63	16	32	10	40	1
PSC63-A22A-025M	63	22	50	_	25	0.96
PSC63-A22A-080M	63	22	40	40	80	1.4
PSC63-A27A-025M	63	27	50	_	25	1.01
PSC63-A27A-080M	63	27	50	55	80	1.6
PSC63-A32A-025M	63	32	63	_	25	1.09
PSC63-A40A-045M	63	40	70	20	45	1.75
PSC63-A40C-050M	63	40	88	28	50	2.4
PSC80-A16A-050M	80	16	32	10	50	2.1

see next page →

Specifications and dimensions are for reference only and subject to change without notice. Please confirm the latest specifications before ordering.

PSC with Type Arbor Adaptor

› Technical parameters

Unit：mm

Ordering code	Dm	D1	D2	L1	L2	m (kg)
PSC80-A22A-030M	80	22	80	_	30	1.86
PSC80-A22A-090M	80	22	40	45	90	2.4
PSC80-A27A-030M	80	27	50	_	30	1.91
PSC80-A27A-090M	80	27	50	50	90	2.7
PSC80-A32A-030M	80	32	80	_	30	2.02
PSC80-A40A-030M	80	40	80	_	30	2
PSC80-A40C-060M	80	40	88	30	60	3.47
PSC80-A60C-080M	80	60	130	50	80	7.78
PSC100-A27A-075M	100	27	60	29	75	4.52
PSC100-A32A-075M	100	32	78	33	75	5.04
PSC100-A40C-040M	100	40	100	_	40	3.95
PSC100-A60C-075M	100	60	130	_	75	8.5

› Main spare parts

Arbor size	Key block	Key block screw	Screw	Washer	Key block key	Key
A16A	141.011.04	113.030.06	120.080.25	-	241.025.56	241.060.90
A22A	141.011.01	113.040.10	120.100.35	-	241.030.63	241.080.00
A27A	141.010.01	113.040.12	120.120.35	133.120.30	241.030.63	241.100.00
A32A	141.010.04	-	120.160.40	133.160.30	241.040.70	241.140.00
A40A	141.010.02	113.060.15	120.200.45	133.200.40	241.050.80	241.170.00
A40C	142.012.01	113.060.20	113.120.40	-	241.050.80	241.100.00
A60C	142.012.02	113.120.25	113.160.50	-	241.100.00	241.140.00

The spare parts can be ordered separately. Please inquire on demand

Specifications and dimensions are for reference only and subject to change without notice. Please confirm the latest specifications before ordering.

SK with Type PSC Adaptor

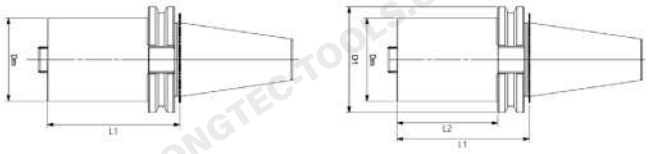

› Technical parameters

Unit : mm

Ordering code	Dm	D1	L1	L2	m (kg)
SK40-PSC32-030M	32	63.5	30	10.9	0.87
SK40-PSC32-060M	32	63.5	60	40.9	1.02
SK40-PSC40-030M	40	63.5	30	10.9	0.86
SK40-PSC40-060M	40	63.5	60	40.9	1.12
SK40-PSC50-040M	50	63.5	40	20.9	0.96
SK40-PSC50-080M	50	63.5	80	60.9	1.52
SK40-PSC63-085M	63	63.5	85	65.9	1.84
SK50-PSC32-030M	32	97.5	30	10.9	2.73
SK50-PSC32-060M	32	97.5	60	40.9	2.86
SK50-PSC40-030M	40	97.5	60	10.9	2.74
SK50-PSC40-060M	40	97.5	60	40.9	2.86
SK50-PSC50-030M	50	97.5	30	10.9	2.7
SK50-PSC50-070M	50	97.5	70	50.9	3.21
SK50-PSC63-030M	63	97.5	30	10.9	2.62
SK50-PSC63-080M	63	97.5	80	60.9	3.71
SK50-PSC80-070M	80	97.5	70	50.9	3.83
SK50-PSC80-120M	80	97.5	120	100.9	5.69
SK50-PSC100-140M	100	100	140	-	7.66

see next page →

Specifications and dimensions are for reference only and subject to change without notice. Please confirm the latest specifications before ordering.

SK with Type PSC Adaptor

› Main spare parts （M）

PSC size	Thereaded sleeve	Pull stud	Key
PSC32	SRLM1815155123	SCFM1215D16050	241.080.00
PSC40	SRLM2215175143	SCFM1415D19057	241.080.00
PSC50	SRLM2515200163	SCFM1615D22069	241.100.00
PSC63	SRLM3015240203	SCFM2020D27087	241.140.00
PSC80	SRLM3015240203	SCFM2020D27087	241.140.00
PSC100	SRLM4820360244	SCFM2420D36130	241.170.00

The spare parts can be ordered separately. Please inquire on demand

Specifications and dimensions are for reference only and subject to change without notice. Please confirm the latest specifications before ordering.

MONGTEC
mongtec-tools.com

HSK with Type PSC Adaptor

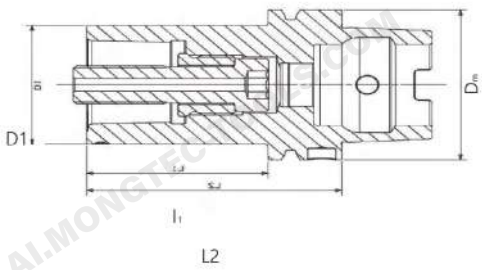

› Technical parameters

Unit：mm

Ordering code	D1	L2	L1	Dm	m (kg)
HSK50A-PSC32-075M	32	75	49	50	0.67
HSK50A-PSC40-080M	40	80	54	50	0.85
HSK63A-PSC32-075M	32	75	49	63	0.97
HSK63A-PSC40-080M	40	80	54	63	1.14
HSK63A-PSC50-090M	50	90	64	63	1.47
HSK80A-PSC40-090M	40	90	64	80	1.69
HSK80A-PSC50-095M	50	95	69	80	2.02
HSK80A-PSC63-110M	63	110	84	80	2.79
HSK100A-PSC32-080M	32	80	43	100	2.42
HSK100A-PSC40-090M	40	90	61	100	2.63
HSK100A-PSC50-100M	50	100	71	100	3.02
HSK100A-PSC63-110M	63	110	81	100	3.7
HSK100A-PSC80-120M	80	120	91	100	4.87
HSK100A-PSC100-155M	100	155	-	100	7.64

› Main spare parts

PSC size	Thereaded sleeve	Pull stud	Key
PSC32	SRLM1815155123	SCFM1215D16050	241.080.00
PSC40	SRLM2215175143	SCFM1415D19057	241.080.00
PSC50	SRLM2515200163	SCFM1615D22069	241.100.00
PSC63	SRLM2515200163	SCFM2020D27087	241.140.00
PSC80	SRLM3015240203	SCFM2020D27087	241.140.00
PSC100	SRLM4820360244	SCFM2420D36130	241.170.00

The spare parts can be ordered separately. Please inquire on demand

Specifications and dimensions are for reference only and subject to change without notice. Please confirm the latest specifications before ordering.

BT with Type PSC Adapto

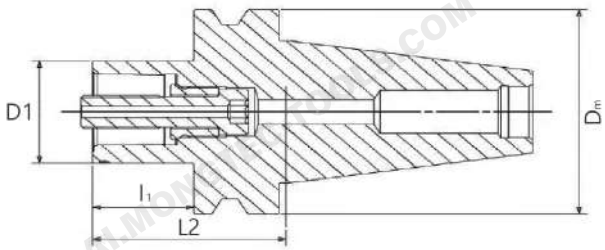

› Technical parameters

Unit：mm

Ordering code	D1	L2	L1	Dm	m (kg)
BT30-PSC32-030M	32	30	8	46	0.42
BT30-PSC32-060M	32	60	38	46	0.58
BT30-PSC40-060M	40	60	38	46	0.67
BT40-PSC32-030M	32	30	3	63	1
BT40-PSC32-060M	32	60	33	63	0.99
BT40-PSC40-030M	40	30	3	63	0.95
BT40-PSC40-060M	40	60	33	63	1.21
BT40-PSC50-030M	50	30	3	63	3.56
BT40-PSC50-070M	50	70	43	63	4.09
BT40-PSC63-075M	63	75	48	63	1.75
BT50-PSC32-040M	32	40	2	100	3.72
BT50-PSC32-070M	32	70	32	100	3.82
BT50-PSC40-040M	40	40	2	100	3.72
BT50-PSC40-070M	40	70	32	100	3.9
BT50-PSC50-040M	50	40	2	100	3.59
BT50-PSC50-080M	50	80	42	100	4.13
BT50-PSC63-040M	63	40	2	100	3.61
BT50-PSC63-090M	63	90	52	100	4.71
BT50-PSC80-070M	80	70	32	100	4.16
BT50-PSC80-120M	80	120	82	100	6.02

see next page →

Specifications and dimensions are for reference only and subject to change without notice. Please confirm the latest specifications before ordering.

BT with Type PSC Adaptor

› Main spare parts

PSC size	Thereaded sleeve	Pull stud	Key
PSC32	SRLM1815155123	SCFM1215D16050	241.080.00
PSC40	SRLM2215175143	SCFM1415D19057	241.080.00
PSC50	SRLM2515200163	SCFM1615D22069	241.100.00
PSC63	SRLM2515200163	SCFM2020D27087	241.140.00
PSC80	SRLM3015240203	SCFM2020D27087	241.140.00

The spare parts can be ordered separately. Please inquire on demand

Specifications and dimensions are for reference only and subject to change without notice. Please confirm the latest specifications before ordering.

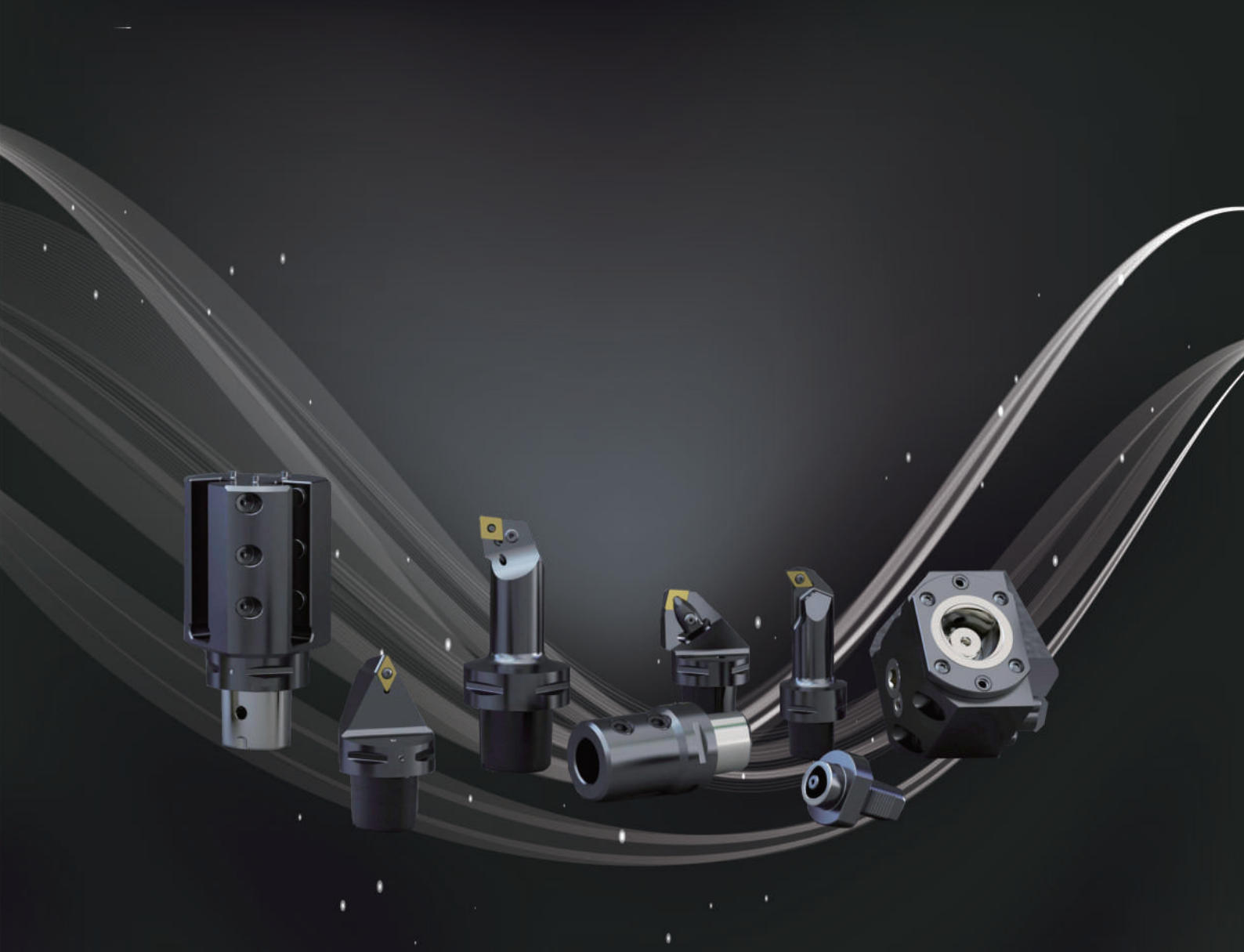

Facebook WeChat YouTube Mongtec Web LINE WhatsApp

Mongtec Precision Inc.

TEL : +886-4-22653360

FAX : +886-4-22653386

E-mail : info@mongtec.com

No. 87, Sec. 1, Daqing St., South Dist., Taichung City 402024, Taiwan (R.O.C.)